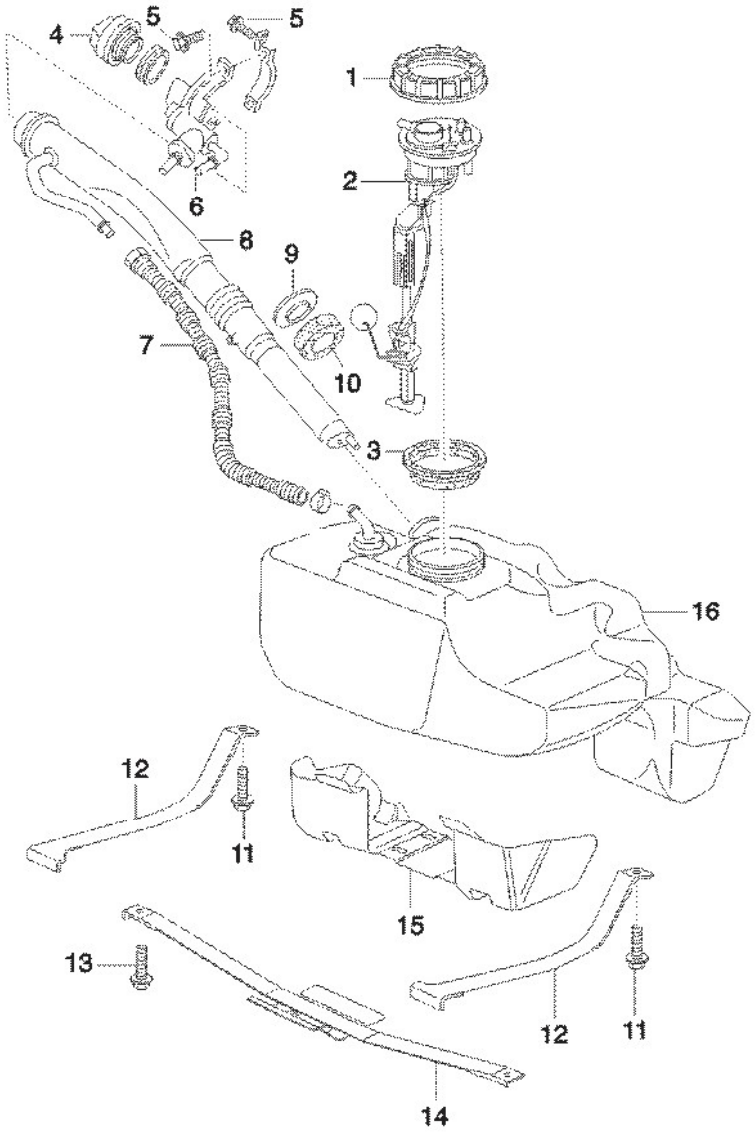

No.	Designation	Qty.	Removal	Installation
1	Union nut	1	VW / Audi socket wrench 3217	Replace and secure with a spot of hot–melt adhesive; tightening torque 70 Nm (52 ftlb.)
2	Fuel level sensor	1		
3	Sealing ring	1		Replace
4	Tank closure	1		Grease sealing ring with Vaseline
5	Hexagon–head bolt M6 x 12	2		Tightening torque 10 Nm (7.5 ftlb.)
6	Fuel evaporative valve	1		
7	Vent hose	1		
8	Filler neck	1	Protect wing from damage	Apply a thin coat of silicone spray in the fitting area
9	Supporting ring	1		
10	Seal	1		Replace

11	Combination screw M8 x 40	2		Tightening torque: 23 Nm (17 ftlb.)
12	Restraining strap (right and left)	2	Loosen before removal of front–axle	Engage in front subframe
13	Combination screw M8 x 40	2		Tightening torque: 23 Nm (17 ftlb.)
14	Restraining strap (transverse)	1		
15	Bottom guard	1		
16	Fuel tank	1		Do not pinch fuel level sensor

top of page

Removing fuel tank

Note

- To lock the steering wheel, use only the steering wheel holder **–A–** approved for airbags to prevent damage or injury should an airbag be released!

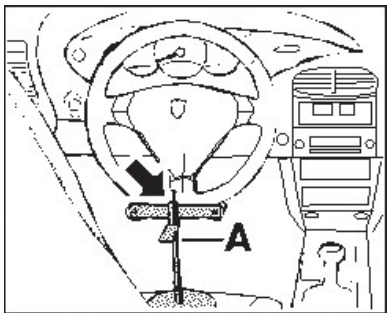

1. Move steering wheel to centre position (front wheels straight–ahead) and lock it with the steering wheel holder **–arrow–** .

Note

- Before disconnecting the battery, observe the work instructions *' 9 Work instructions after disconnecting the battery* !

2. Disconnect battery. Disconnect negative terminal and cover the terminal or battery.
3. Remove the front wheels, using the prescribed special tool socket wrench insert P 300 to avoid damage to the wheels.
4. Remove front wheel housing liner *' 50 56 19 Removing and installing front wheel housing liner* .

Note

- It is impermissible to suck out the fuel through the filler neck, as this can damage the inner flap on the filler neck. Always suck out the fuel through the hole for the fuel level sensor.

- Remove fuel level sensor.

5. Empty the fuel tank. The fuel must be sucked out through the hole for the fuel level sensor. To do this, remove the closure cap in the luggage compartment (unscrew four hexagon nuts a/f 10) and disconnect all cable plugs and fuel lines from the fuel level sensor. Undo union nut with special tool socket wrench 3217 , carefully remove the fuel level sensor and place in a clean container, e.g. a bucket. Remove the fuel using a suitable fuel extractor. Cover hole for the fuel level sensor with a cloth or similar.

Note

- To remove and install the front wheel drive the help of a second person is necessary

6. Remove the front–wheel drive complete with cardan shaft. Get a second person to help. See also *' 39 88 19 Removing and installing front wheel drive* and *' 39 02 19 Removing and installing cardan shaft* .
7. Drain coolant. To do this, clamp shut the coolant hoses between the cardan tunnel and the engine (including the black vent line over the left coolant pipe) with hose clamps. Drain coolant at the radiator drain plug *' 19 38 17 Draining and filling in coolant* . Collect coolant in a clean container for re–use.

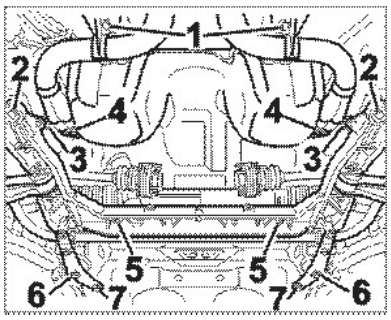

8. Re–tighten drain plugs. Undo the coolant pipes and vent line at the cardan tunnel. To do so, slide off the spring–band clamps at the rear using spring–band clamp pliers, unclip from the plastic holders, and unscrew the two hexagon–head bolts M6 **–Item 1–** and the two hexagon nuts M6 **–Item 3–** at the front pipe holder. Place a coolant collecting container ready, secure the pipes with wire and then pull from the rear coolant hoses. Collect the draining coolant and allow pipes to drain.

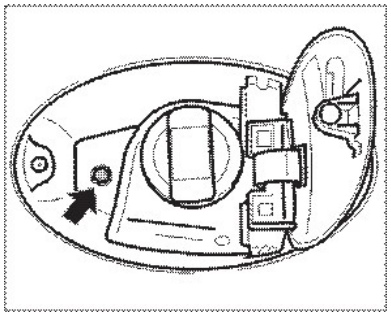

9. Detach tank filler neck. To do so, remove closure cap and unscrew the hexagon bolt M6 x 12 **–arrow–** .

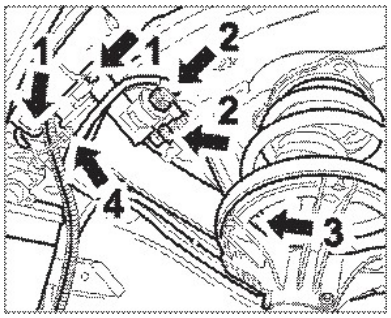

10. Unclip seal of the filler neck in the right front wheel well **–1–** . Disconnect plug connections for the vent lines at the filler neck **–2–** . Press release buttons and simultaneously pull the lines apart. Disconnect ground strap **–4–** on the plug. Disconnect vent line to fuel tank **–3–** behind the spring strut.

Note

- To avoid damage to the wing when removing and installing the filler neck, suitable protective covers must be placed.

11. Turn the filler neck clockwise by approx. 45° and pull out carefully. The open surge flap must not be damaged when pulling out the filler neck. Close the opening in the fuel tank (e.g.with the cap of a spray can).

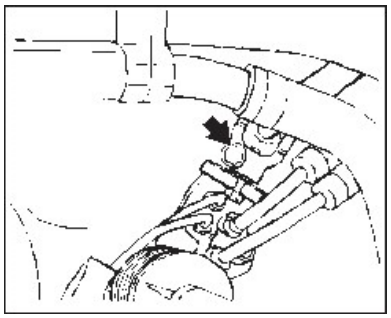

12. Loosen universal joint (steering shaft) **–arrow–** at steering gear. Take out the fit bolt M8 x 35 and slide the universal joint upwards. If necessary, carefully force apart the clamping piece with a screwdriver and spray with rust solvent. Replace fit bolt.

Note

- The suspension subframe must be lowered. To do this, undo the two screws fastening the steering gear to the suspension subframe.

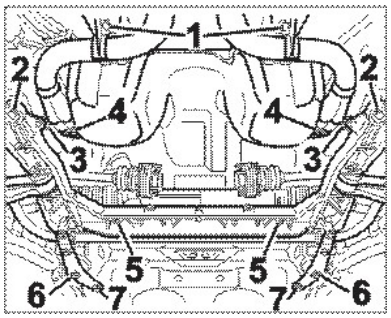

13. Detach steering gear from the suspension subframe. To do this, unscrew the two hexagon–head bolts

M10 x 1.5 a/f 15 (on the underside of the suspension subframe) **–5–** and press off the steering gear *' 48 90 19 Removing and installing steering gear* .

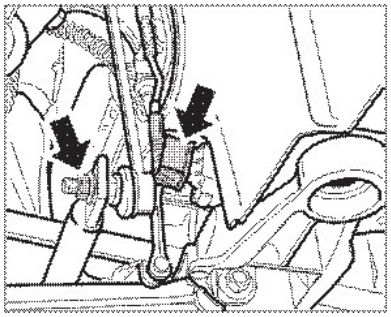

14. Support suspension subframe with a transmission jack. Pull off the cable plug on the sensor of the headlight beam adjustment **–right arrow–** . Detach stabilizer from the mount. To do this, remove the hexagon nut M10 from each joint **–left arrow in the Figure–** , countering with an open–ended wrench at the joint hexagon.

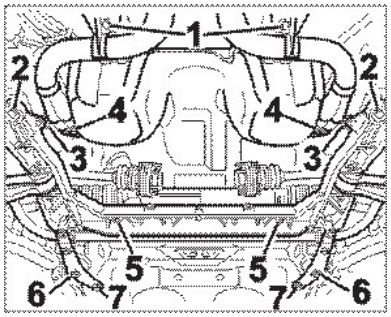

15. Detach suspension subframe. Undo the six hexagon–head bolts at the front and rear **–Items 2, 6 and 7–** and lower complete suspension subframe by approx. 15 cm.
16. Disconnect all coolant lines. To do this, undo the four spring–band clamps **–Item 4, upper part of Figure–** on the coolant hoses at the front and pull off the coolant pipes.

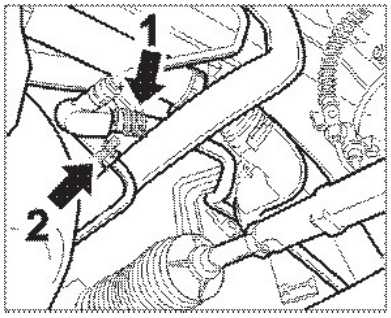

17. Undo a spring–band clamp for the vent line on the distributor hose in the left front wheel well **–1–** . Remove coolant pipe.

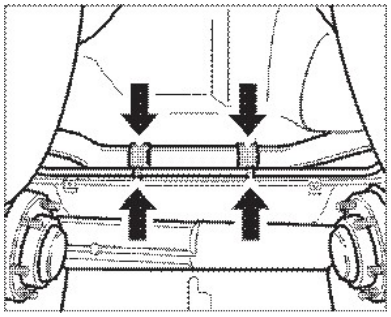

18. Pull off vent line from distributor hose in the left front wheel well **–Item 2, previous Figure–** and unclip from the two holders under the fuel tank **–arrow–** . Remove line on the coolant hose in the right front

wheel well by undoing the spring–band clamps. If necessary, collect the draining coolant. Pull off vent line to the side.

Note

- Observe the installation position of both connector tubes to the radiators in relation to the plastic holders.

19. Disconnect both connector tubes to the radiators under the fuel tank and remove. To do this, undo hose clamps on the coolant hoses.

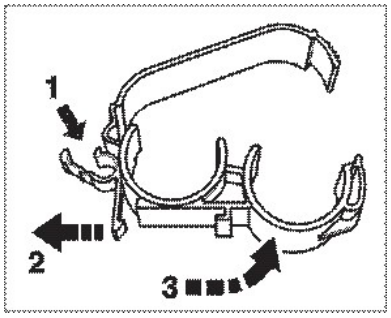

20. Remove both plastic holders complete with coolant pipes from the body. To do this, pull back the tab on each holder **–2–** , press the entire holder forwards and up **–3–** and remove the pipe package together with both holders to the rear. Remove pipes from the plastic holders in the wheel wells. Observe installation position of the coolant pipes!

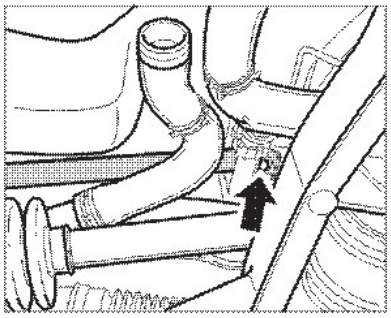

21. Detach fuel tank restraining strap (transverse) from the body by unscrewing the two hexagon–head bolts M8 x 40 **–arrow–** .

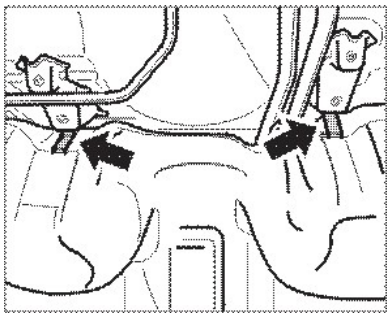

22. Lift the fuel tank from the support lugs **–arrows–** and, with the help of a second person, carefully remove in a downward direction (avoiding damage to the hole for the fuel level sensor).

top of page

Installing fuel tank

Note

- Fix connecting cable and fuel lines, using adhesive tape if necessary, to the body aperture for the fuel level sensor
- Observe line routing between fuel tank and body (e.g. chafing, pinching)

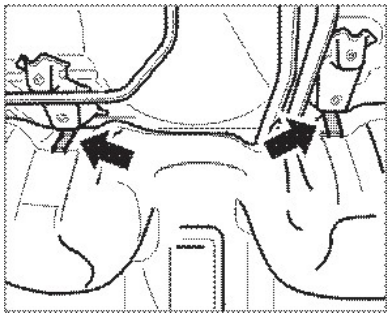

1. Lift the fuel tank with the help of a second person and carefully insert from below (avoiding damage to the hole for the fuel level sensor). Engage fuel tank on the support lugs on the floor of the body **–arrows–** .

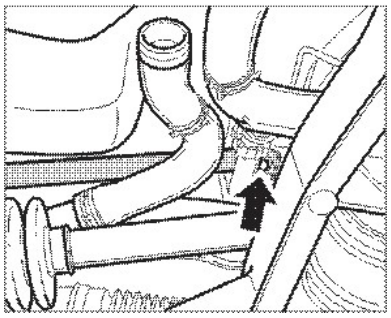

2. Install fuel tank restraining strap (transverse). Position hexagon bolts M8 x 40 at the sides of the body and tighten **–arrow–** .

Tightening torque: 23 Nm (17 ftlb.)

3. Insert fuel level sensor with new seal into fuel tank. Position and tighten new union nut. Fit lines and plugs. After assembly, secure union nut with a spot of hot–melt adhesive. Fit closure cap in the luggage compartment (screw tight the four hexagon nuts a/f 10) *' 20 66 19 911 Carrera 4 (996) Removing and installing fuel pump* .

Tightening torque for union nut 70 Nm (52 ftlb.)

4. Pre–position connector tubes to the radiators together with pre–mounted holders (replace if necessary) in installation position under the fuel tank. Clip holders to the body. To do this, hook the holders at the front and engage the tab at the rear. Push the left and right pipes into coolant hoses and tighten screw–type hose clamps.

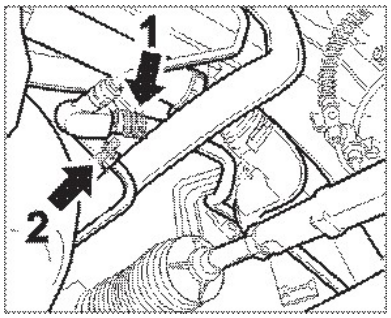

5. Insert vent line into distributor hose in the left front wheel well **–2–** and into coolant hose in the right front wheel well and fit the spring–band clamps.

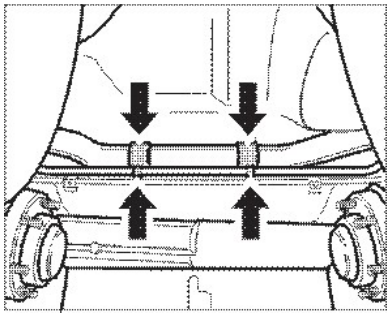

6. Clip vent line into the two holders**–arrows–** on the coolant pipes.

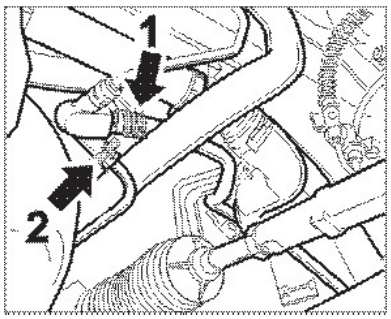

7. Fasten coolant pipes at front. To do this, insert two aluminium pipes and a vent line in the network into the corresponding coolant hoses and fit the five spring–band clamps (1 clamp for vent line on the distributor hose in the left front wheel well **–Item 2–** and four clamps for coolant pipes **–Item 4 in next figure–**).
8. Mount four pipe holders using two M6 hexagon–head bolts and two M6 hexagon nuts **–Items 1 and 3 in next Figure–** and fix coolant pipes on the vehicle underbody in the holders. Push coolant pipes into the coolant hoses to the engine, tighten the spring–band clamps and remove the hose clamps again.

Tightening torque of the hexagon–head bolts M6: 10 Nm (7.5 ftlb.)

Note

- When lifting the suspension subframe, protect servo lines of the steering from damage

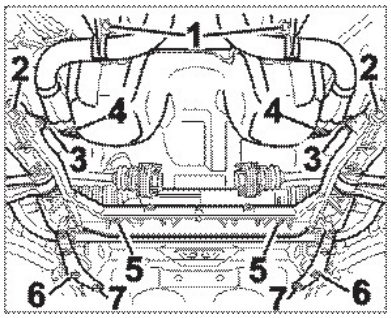

9. Carefully lift suspension subframe and fix with the six hexagon–head bolts **–Items 2, 6 and 7–** .
   Screw suspension subframe into place to the prescribed tightening torque.

Tightening torque M14 x 1.5 : 160 Nm (118 ftlb.) (**–Item 2–**)
Tightening torque of corner plate to side member M10 x 1.5 : 65 Nm (48 ftlb.) (**–Item 6–**)
Tightening torque of corner plate to body M12 x 1.5 : 100 Nm (74 ftlb.) (**–Item 7–**)

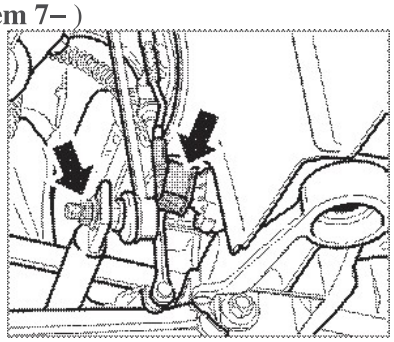

10. Fit stabilizer to mount **–left arrow–** . To do this, screw two M10 hexagon nuts on the joint heads, simultaneously countering at the joint hexagon with an open–ended wrench. Connect cable plug to sensor of the headlight beam adjustment **–right arrow–** .

Tightening torque of M10 hexagon nut: 46 Nm (34 ftlb.)

Note

- Replace hexagon–head bolts for fastening the steering gear to the suspension subframe and the fit bolt for the universal joint whenever they have been removed. Screw threads must be clean and free of grease.

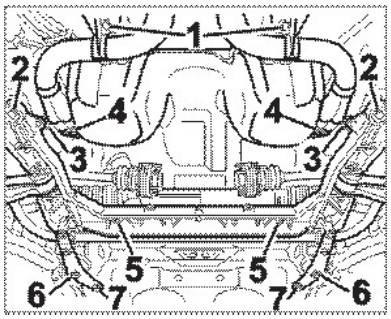

11. Position the steering gear with the centring sleeves in the through–holes on the suspension subframe and screw into place with two new hexagon–head bolts a/f 15 M10 x 1.5 to the underside of the suspension frame **–5–** *' 48 90 19 Removing and installing steering gear* .

Tightening torque 65 Nm (48 ftlb.).

Note

- The lug on the toothed steering gear pin must engage in the clamping slot of the universal joint **–arrows–** .

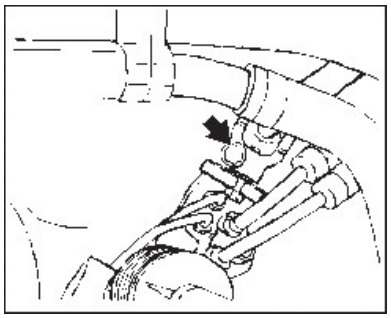

12. Push universal joint of the steering shaft onto the toothed steering gear pin. The lug must engage in the clamping slot of the universal joint. Insert new fit bolt M8 x 35 into the retaining groove **–arrow–** and tighten with the prescribed torque.

Tightening torque: 23 Nm (17 ftlb.)

13. Install the front wheel drive with the help of a second person *' 39 88 19 Removing and Installing front wheel drive* .

Note

- To facilitate installation, apply a thin coat of silicone spray to the filler neck in the fitting area.

14. Fit filler neck. Remove protective cap on fuel tank. Carefully push the filler neck with rotary movements into the flange on the fuel tank (protect wing and wheel well from damage). Fit vent lines and ground cable **–Items 2, 3 and 4 in the next figure–** by connecting to the filler neck.

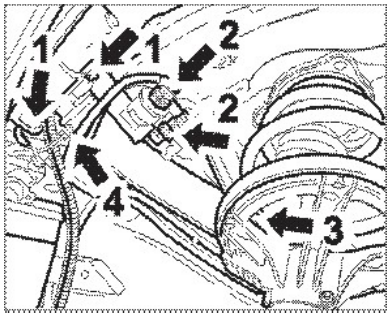

15. Fit seal in correct position **–1–** . Ensure that the locking tabs are seated correctly.

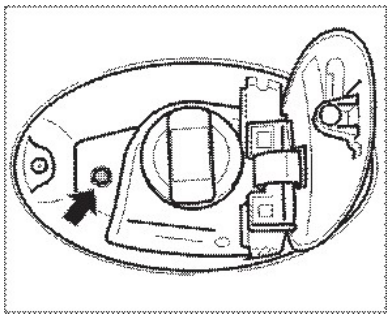

16. Tighten hexagon–head bolt M6 x 12 of the filler neck **–arrow–** . Coat seat of the cap seal with Vaseline.

Tightening torque 10 Nm (7.5 ftlb.)

17. Fill and bleed cooling system *' 19 38 17 Filling and bleeding the cooling system .*
18. Refill fuel tank.
19. Calibrate fuel level sensor system => Calibrating fuel level sensor system.
20. Install front wheel housing liners *' 50 56 19 Removing and installing front wheel housing liner .*

Note

- Observe specification for greasing wheel bolts *' 44 05 19 Removing and installing wheel .*

21. Fit the front wheels, using the prescribed special tool socket wrench insert P 300 to avoid damage to the wheels.

Tightening torque of the wheel bolts : 130 Nm (96 ftlb.).

22. Connect the battery *' 9 Work instructions after disconnecting the battery .*
23. Remove steering wheel holder.
24. Check wheel arch values. In the case of deviations, perform a suspension alignment if necesary and adjust *' 44 Wheels, tires, suspension alignment .*

Tightening torques for front axle and fuel tank

Location	Thread	Tightening torque Nm (ftlb.)
Cross member/side member on body (front and rear)	M14 x 1.5	160
Corner plate on body	M12 x 1.5	100
Diagonal brace on body and side member	M12 x 1.5	100
Front–axle drive shaft to final drive	M8	39
Rear front–axle transmission support to body	M10	65
Front front–axle transmission support to front–axle cross member	M10	65
Stud to front–axle cross member	M8	20
Tank strap to body	M8	23
Stabilizer mount to stabilizer	M10	46
Universal joint (steering shaft) to steering gear	M8	23
Steering gear to cross member	M10 x 1.5	65

Wheel to wheel hub	M14 x 1.5	130

996410, 996411, 996420, 996421, 996450, 996451, 996430, 996431, 996610, 996611

20 15 01 Calibrating fuel level sensor system

Caution

WARNING

Danger of fire and injury!
Observe general safety regulations on the fuel system!
Wear protective gloves!

Note

- Calibration is necessary after replacement of the fuel tank, fuel level sensor or instrument cluster.
- The fuel level sensor system need not be calibrated if the battery was disconnected or a plug connection on the instrument cluster or fuel level sensor was removed. The values remain stored in the instrument cluster.
- A range on remaining fuel of less than 15 km is not displayed in the instrument cluster.

1. Disconnect the battery and cover terminal or battery.
2. Remove cap over the fuel level sensor system.
3. Remove fuel level sensor. ’ Rep. Gr. 20 66 19; Removing and installing fuel pump.
4. Using a fuel extractor, completely drain the fuel tank through the fuel level sensor opening. Fuel extractor: Refer to the Workshop Equipment Manual, Chapter 3 "Workshop Equipment".
5. **–Make sure that the two recesses on the left and right–hand sides of the tank are emptied completely.–**
6. Reinstall the fuel level sensor and, with "ignition off", fill the tank with **–28 litres–** of fuel.
7. Perform tank calibration with the Porsche System Tester 2:
   - Select vehicle type (911 Carrera)
   - Select control modules
   - Select instrument cluster
   - Select menu item "Tank calibration"
   - Confirm calibration
8. The fuel level sensor system has now been calibrated.

996420, 996421, 996450, 996451, 996620, 996621, 996650, 996651, 996840, 996841

20 39 19 Removing and installing fuel return line

top of page

Removal

1. Remove engine–transmission unit *' 10, 10 removing and installing engine*
2. Remove coolant expansion tank.

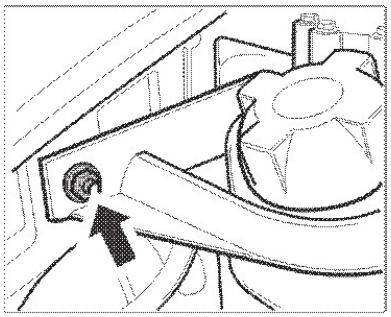

- Undo the hexagon nut.

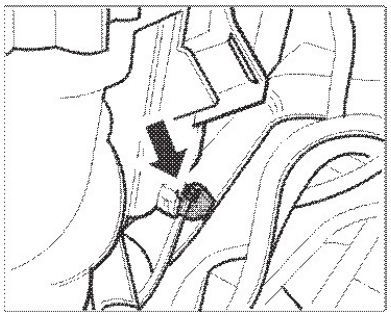

- Disconnect electrical plug connection from the sensor for coolant–level indicator.

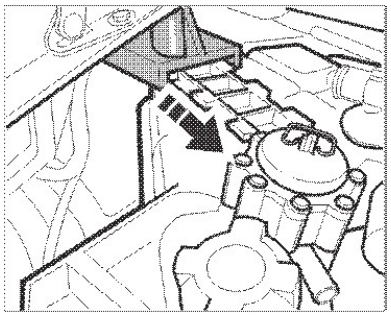

- Pull coolant expansion tank out of the guide rails and remove.

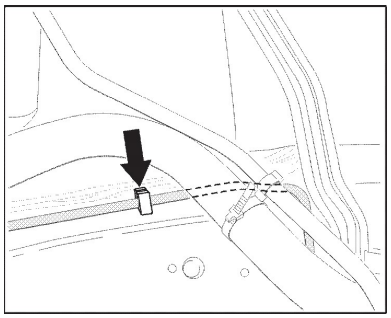

3. Open line holder.

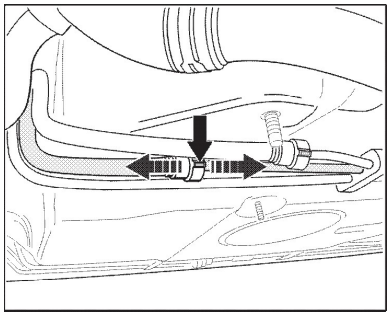

4. Disconnect line plug connection on the vehicle floor. In order to do this, press button and at the same pull the wires apart. Collect residual fuel. Protect the open lines against dirt.

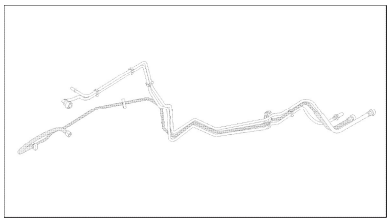

5. Guide the fuel return line out of the line holder and remove.

top of page

Installation

1. Guide the fuel return line into the line holder and insert.

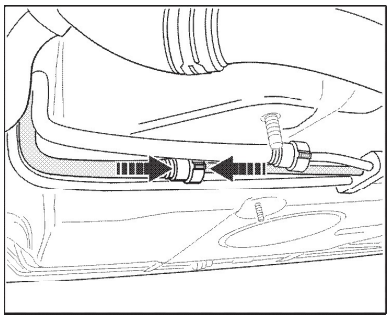

2. Connect the lines onto the plug connections. The plug must engage audibly. Correct engagement of the plug connection must be checked with a gentle pull.

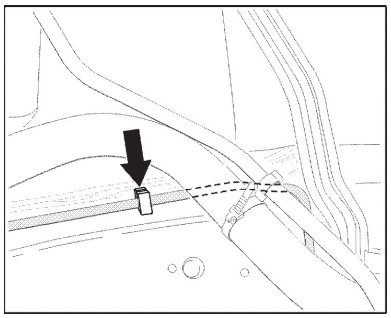

3. Close line holders.
4. Push coolant expansion tank into the guide rails and fasten.

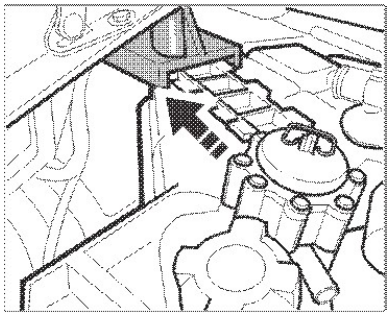

5. Attach connector from the sensor for the coolant–level indicator.
6. Install engine again *’ 10 removing and installing engine.*

996420, 996421, 996450, 996451, 996620, 996621, 996650, 996651, 996840, 996841

20 60 55 Replacing fuel filter

Removing fuel filter

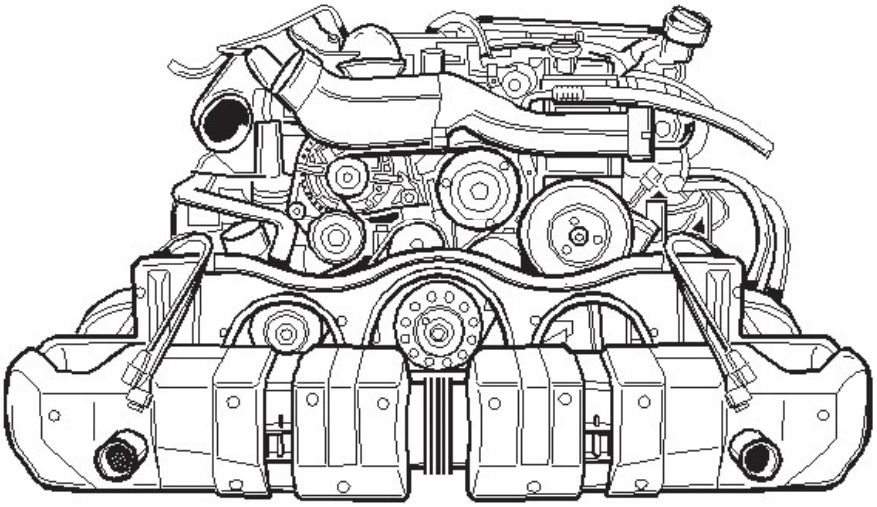

top of page

Removing fuel filter

1. Disconnect plug on the hot film mass air flow meter. To do this, push the plug downwards and press the grooved surface at the sides. Pull the plug up and off at the same time.

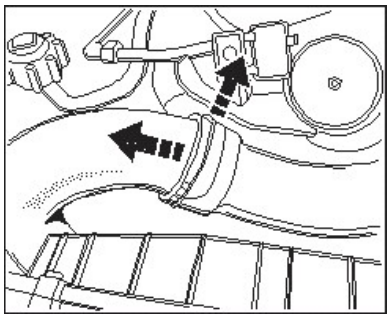

2. Pull off the connecting hose between the left turbocharger and the intake pipe. To do this, unclip the retaining clip using a screwdriver and pull out the hose. Refit the retaining clips immediately.

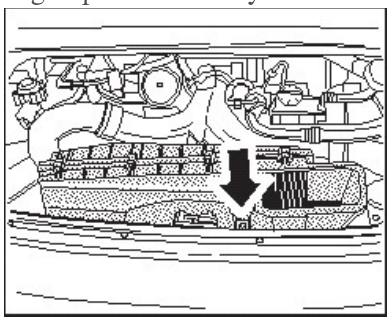

3. Unscrew the fastening screw M6 x 34 at the rear of the air cleaner housing.

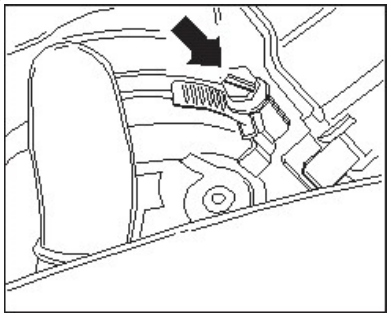

4. Undo hose clamp. Undo the hose clamp **–arrow–** between the air cleaner housing and the intake pipe.

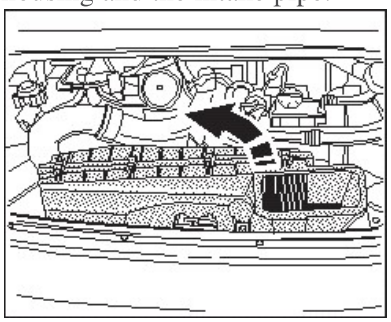

5. Tilt air cleaner housing outwards. To do this, tilt the housing upwards on the right by 90° and then turn the housing to the left by approx. 90°.
6. Unclip the hot film mass air flow meter cable. Open the omega clip on the left side of the air cleaner housing and take out the cable. Take the air cleaner housing out of the engine compartment.

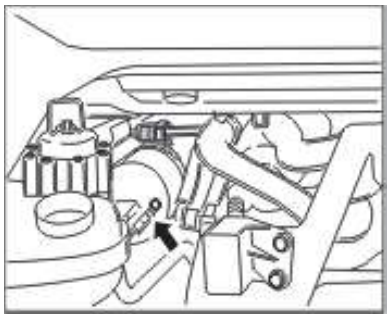

7. Pull off the ground cable from the fuel filter.

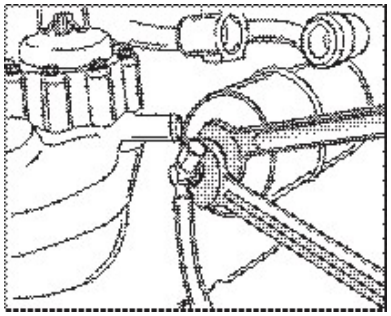

8. Undo fuel pressure line. Make sure to counter with a wrench when doing this. Collect emerging fuel.

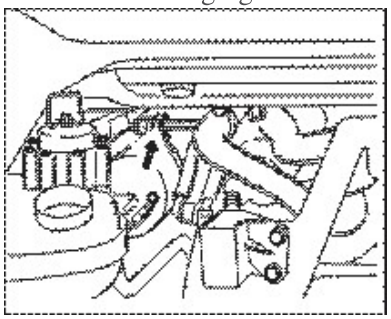

9. Disconnect the plug connection and collect the residual fuel. Protect open lines against dirt.

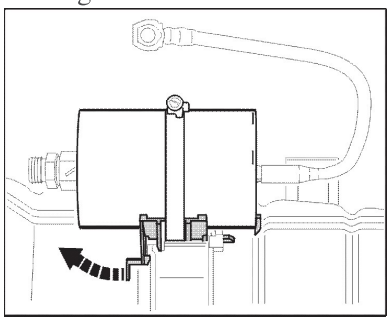

10. Remove fuel filter with holder. To to this, bend the retaining clip upward as shown **–arrow–** and simultaneously remove the filter with holder.
11. Remove fuel filter. To do this, fully open the restraining strap and take the fuel filter out.

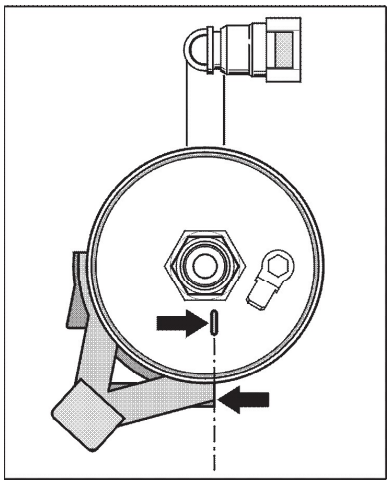

12. Push the new fuel filter into the restraining strap and tighten again. Position the filter in such a way that the mark **–arrows–** on the filter is aligned with the outer edge of the holder in installation position.
13. Position the fuel filter with holder on the coolant expansion tank again and press it down at rear. The holder must engage audibly.

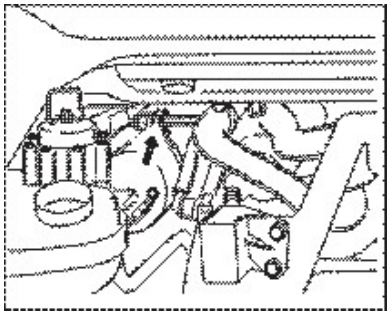

14. Connect plug connector of the fuel supply line. The plug must engage audibly. Pull slightly to ensure that the connection is properly locked.

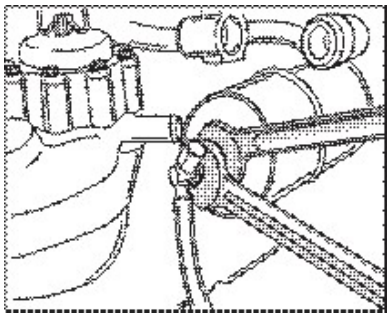

15. Tighten fuel pressure line. Make sure to counter with a wrench when doing this.

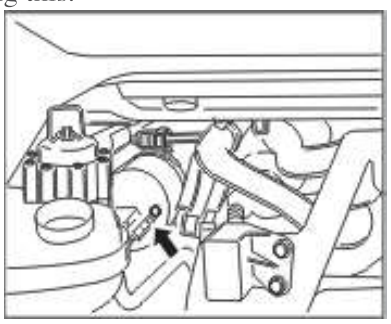

16. Connect the ground cable to the filter.
17.

Clip in hot film mass air flow sensor cable. To do this, insert the cable into the omega clip on the left air cleaner housing side and then close the clip.

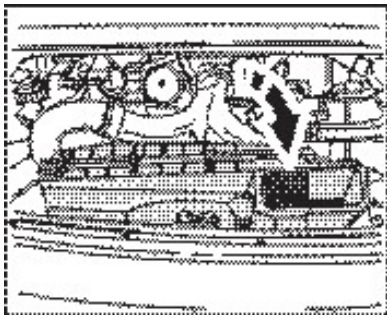

18. Place the air cleaner housing in the engine compartment as shown and move into installation position. To do this, first turn the housing to the right by approx. 90° and push the rubber hose over the flange. Then swivel downwards by 90°.

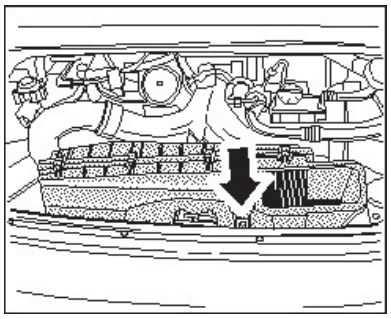

19. Tighten the fastening screw M6x34 to 10 Nm (7.5 ftlb.).

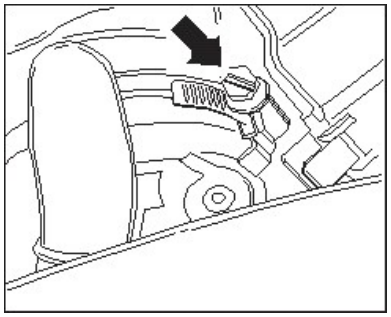

20. Tighten the hose clamp on the connecting hose. Reconnect the plug on the hot film mass air flow sensor. The plug must engage audibly!

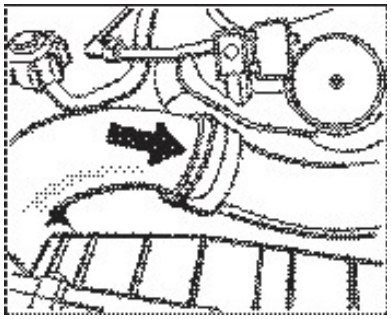

21. Attach the connecting hose between the left turbocharger and the intake distributor. The hose must engage audibly!

996420, 996421, 996450, 996451, 996620, 996621, 996650, 996651, 996840, 996841

20 66 01 Checking quantity delivered by fuel pump

Caution

WARNING

Observe the general safety instructions when working on the fuel system and when handling petrol and other fuels => Precautionary measures when working on fuel system !
Attach or mount a warning notice on the vehicle in a clearly visible position **–see Figure–** !
Only carry out checking when engine is standing still!
Ensure good ventilation in the work area (e.g., open window, switch on exhauster)!

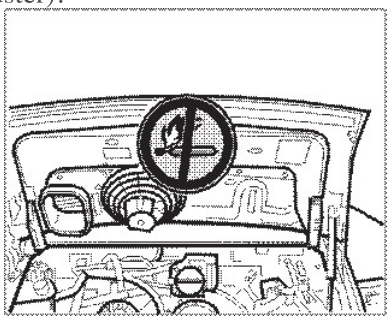

Secure vehicle with warning sign!

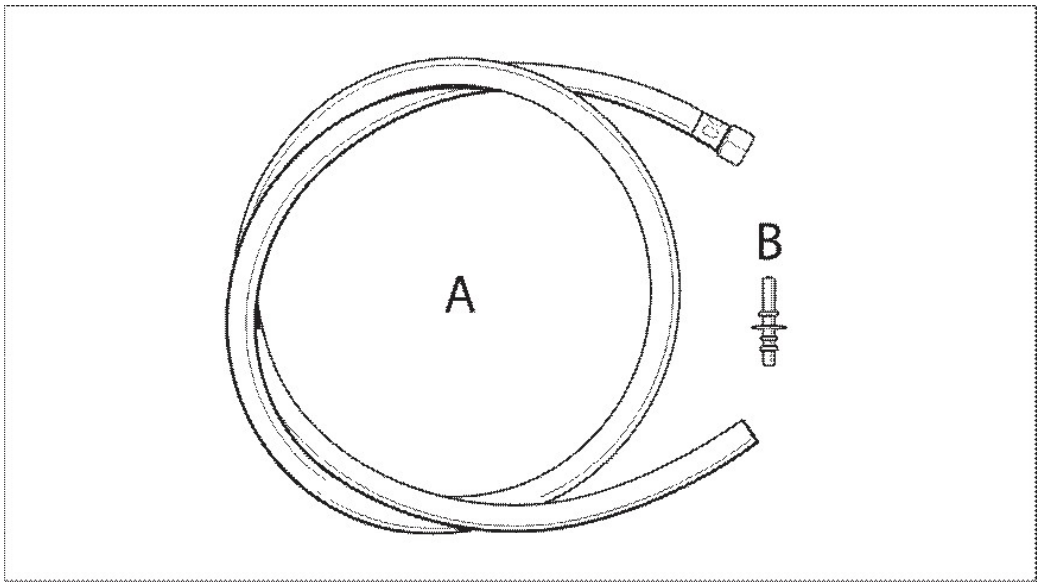

Item	Designation	Source	Remarks
–A–	Connection hose 9507	see workshop equipment manual chapter 2.2.2	Insert receptacle in open end of the hose
–B–	Receptacle	Original Porsche spare parts; part number 996.106.255.00	To connect to the rapid–action coupling of the fuel return line

Note

- The battery voltage may not fall below 12 volts during the fuel pressure check!

1. Check the charge state of the battery, e.g. using a voltmeter or the Porsche System Tester PST 2. The battery voltage must not fall below 12 volts during the check.
2. Connect the Porsche Tester PST 2 in the vehicle, switch on the ignition and switch off all loads, such as the radio and air conditioning.
3. Remove the rear and middle underside panels. To remove the rear panel, the left side panel must also be loosened, see *' 911 Carrera (996), 51 90 19 Removing and installing underside panels* , position 4, 5 and 9.

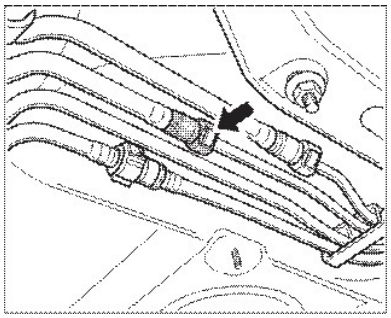

4. Loosen the rapid–action coupling on the fuel return line **–arrow–** ; to do this, press in the locking lug and pull off the coupling. Collect emerging residual fuel with a cloth, for example.

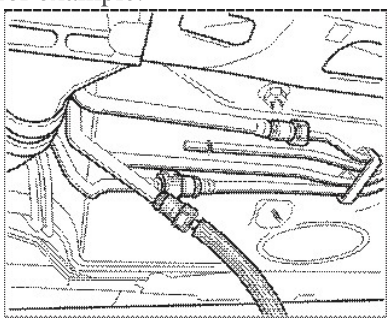

5. Insert receptacle into the open end of the hose for the special tool connection hose 9507 and connect with the rapid–action coupling of the fuel return line. Be sure that the coupling is fitted correctly (must engage audibly) by pulling the line apart!
6. Put the open end of the hose in a petrol–resistant canister. Keep a stopwatch at hand for the following measurement.

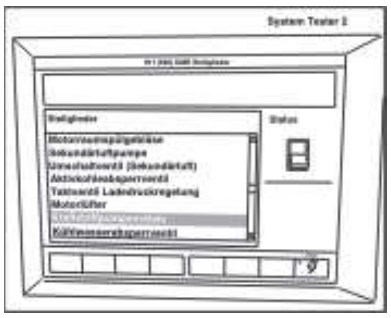

7. Activate the fuel pump relay using the Porsche System Tester PST 2. To do this, select the line drive links in the DME control unit individual search and then select fuel pump relay. Activate by pressing F8 **–see figure–** . After 30 seconds, deactivate the relay again by pressing F8 .
8. Transfer the collected fuel into a suitable measuring cup.

Target value for supplied fuel quantity:
– in 30 seconds, at least 1.25 litres

9.

Remove the receptacle with hose and insert the rapid–action coupling onto the fuel return line. Be sure that the coupling is fitted correctly (must engage audibly) by pulling the line apart!

10. Install underside panels *' 911 Carrera (996), 51 90 19 Removing and installing underside panels.*
11. Switch off ignition, switch off Porsche System Tester and disconnect.

996420, 996421, 996450, 996451, 996620, 996621, 996650, 996651, 996840, 996841

20 68 19 Removing and installing fuel cooler

top of page

Removing fuel cooler

Note

- It is necessary to remove the refrigerant by suction before removing the fuel cooler.
- The safety regulations must be observed during all work on the refrigerant system! (See: 87–1 Safety regulations when handling refrigerant R134a)

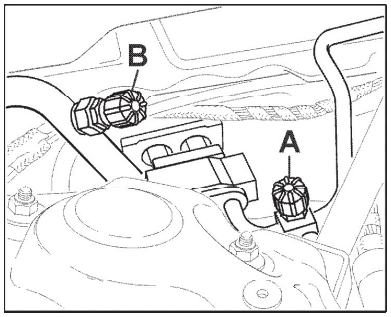

1. Suck refrigerant out of the charging valves in the luggage compartment.

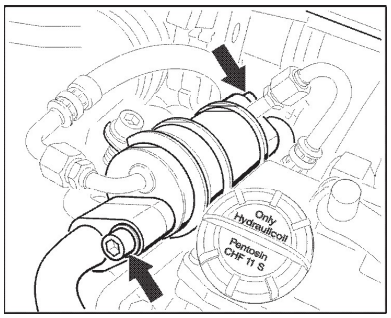

2. Open the engine compartment lid and disconnect the refrigerant lines from the fuel cooler. Immediately seal the openings with suitable plugs.
3. Disconnect the negative terminal of the battery.

WARNING

Danger of fire and injury! Observe general safety regulations on the fuel system! Wear protective gloves that are fuel–resistant! Ensure that there is adequate ventilation.

CAUTION

Always counter at the fuel lines when undoing them.

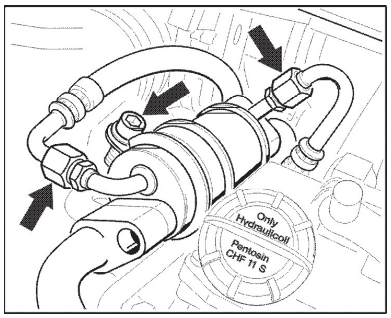

4. Undoing fuel lines. Counter union nut with a/f 17 and with a/f 14.
5. Collect residual fuel. Undo holding clamp and remove fuel cooler.

top of page

Installing fuel cooler

1. Fit new seals on to refrigerant lines and fasten on to fuel cooler.
2. Fasten holding clamp of the fuel cooler.

CAUTION

Always counter at the fuel lines when fastening them.

3. Fastening fuel lines.
4. Drain and fill the refrigerant unit.
5. Warm the engine up to operating temperature and carry out a leak test.

996420, 996421, 996450, 996451, 996620, 996621, 996650, 996651, 996840, 996841