Table of Contents

0 Diagnosis

0 General

Installation location, diagnostic socket. 42
Installation location, diagnostic socket. 42
Operating instructions Porsche System Tester II9588. 43
General information. 43
Malfunctions. 44
Design of the Tester. 45
Connections. 47

45 Anti-Lock Brake System (ABS)

4503 Introduction. 51
General instructions/safety instructions. 51
Communication between control module and Porsche System Tester ll9588. . . . 52
General information on the fault memory. 52
Diagnostic conditions. 52
Possible causes of fault. 52
Diagnosis/troubleshooting. 53
4503 Tools. 54
4503 Component arrangement. 56
4503 Connector assignment. 58
PSM control module wiring harness plug. 58
4503 Control module function. 61
Control module replacement. 61
Rate-of-turn sensor. 61
Coding. 63
Static test. 64
Swap test. 64
Bleeding. 64
Steering-angle sensor calibration. 65
4503 Fault overview. 66
4503 Fault code 4200. 73
Speed sensor lead, front right. 73
4503 Fault code 4201. 77
Speed sensor, front right. 77
4503 Fault code 4205. 81

Speed sensor lead, front left. . . . 81
4503 Fault code 4206. . . . 85
Speed sensor, front left. . . . 85
4503 Fault code 4210. . . . 89
Speed sensor lead, rear right. . . . 89
4503 Fault code 4211. . . . 93
Speed sensor, rear right. . . . 93
4503 Fault code 4215. . . . 97
Speed sensor lead, rear left. . . . 97
4503 Fault code 4216. . . . 101
Speed sensor, rear left. . . . 101
4503 Fault code 4226. . . . 105
Hydraulic power unit faulty. . . . 105
Diagnosis/troubleshooting. . . . 105
4503 Fault code 4231. . . . 106
Hydraulic power unit faulty. . . . 106
Diagnosis/troubleshooting. . . . 106
4503 Fault code 4236. . . . 107
Hydraulic power unit faulty. . . . 107
Diagnosis/troubleshooting. . . . 107
4503 Fault code 4241. . . . 108
Hydraulic power unit faulty. . . . 108
Diagnosis/troubleshooting. . . . 108
4503 Fault code 4246. . . . 109
Hydraulic power unit faulty. . . . 109
Diagnosis/troubleshooting. . . . 109
4503 Fault code 4251. . . . 110
Hydraulic power unit faulty. . . . 110
Diagnosis/troubleshooting. . . . 110
4503 Fault code 4256. . . . 111
Hydraulic power unit faulty. . . . 111
Diagnosis/troubleshooting. . . . 111
4503 Fault code 4261. . . . 112
Hydraulic power unit faulty. . . . 112
Diagnosis/troubleshooting. . . . 112
4503 Fault code 4266. . . . 113
Return pump fault. . . . 113

Diagnosis/troubleshooting. . . . 113
4503 Fault code 4276. . . . 114
Valve relay. . . . 114
Diagnosis/troubleshooting. . . . 114
4503 Fault code 4281. . . . 115
Brake fluid level. . . . 115
Diagnosis/troubleshooting. . . . 116
4503 Fault code 4340. . . . 118
Stop light switch. . . . 118
Diagnosis/troubleshooting. . . . 119
4503 Fault code 4400. . . . 121
Transverse acceleration sensor. . . . 121
Diagnosis/troubleshooting. . . . 121
Diagnosis/troubleshooting. . . . 124
4503 Fault code 4420. . . . 128
Rate-of-turn sensor. . . . 128
Diagnosis/troubleshooting. . . . 128
Diagnosis/troubleshooting. . . . 131
4503 Fault code 4440. . . . 134
Steering angle sensor. . . . 134
Diagnosis/troubleshooting. . . . 134
4503 Fault code 4460. . . . 137
Pressure sensor. . . . 137
Diagnosis/troubleshooting. . . . 138
4503 Fault code 4480. . . . 140
Booster pump. . . . 140
Diagnosis/troubleshooting. . . . 141
4503 Fault code 4607. . . . 143
Control module faulty. . . . 143
Diagnosis/troubleshooting. . . . 143
4503 Fault code 4802. . . . 144
Undervoltage. . . . 144
Diagnosis/troubleshooting. . . . 144
4503 Fault code 5024. . . . 145
CAN message missing from Tiptronic. . . . 145
Diagnosis/troubleshooting. . . . 145
4503 Fault code 5260. . . . 147
Booster valve 1. . . . 147

Diagnosis/troubleshooting. . . . 147
4503 Fault code 5262. . . . 148
Booster valve 2. . . . 148
Diagnosis/troubleshooting. . . . 148
4503 Fault code 5265. . . . 149
Switch-over valve 1. . . . 149
Diagnosis/troubleshooting. . . . 149
4503 Fault code 5267. . . . 150
Switch-over valve 2. . . . 150
Diagnosis/troubleshooting. . . . 150
4503 Fault code 5281. . . . 151
Version coding error. . . . 151
Diagnosis/troubleshooting. . . . 151
4503 Fault code 5500. . . . 152
Wheel speed monitoring. . . . 152
Diagnosis/troubleshooting. . . . 152
4503 Fault code 5504. . . . 154
Extraordinary operating condition. . . . 154
Diagnosis/troubleshooting. . . . 154
4503 Fault code 5505. . . . 155
Electrical system (steering angle sensor). . . . 155
Diagnosis/troubleshooting. . . . 155
4503 Fault code 5506. . . . 158
Electrical system (rate-of-turn sensor). . . . 158
Diagnosis/troubleshooting. . . . 158
Diagnosis/troubleshooting. . . . 161
4503 Fault code 5520. . . . 164
CAN data bus (drive). . . . 164
Diagnosis/troubleshooting. . . . 165
4503 Fault code 5521. . . . 169
Faulty data exchange. . . . 169
Diagnosis/troubleshooting. . . . 169
4503 Fault code 5522. . . . 170
DME: CAN message missing 1. . . . 170
Diagnosis/troubleshooting. . . . 170
4503 Fault code 5523. . . . 172
DME: CAN message missing 2. . . . 172
Diagnosis/troubleshooting. . . . 172

4503 Fault code 5524. 174
DME: incorrect CAN rpm signal. 174
Diagnosis/troubleshooting. 174
4503 Fault code 5525. 175
Torque transmission from the DME disturbed at times. 175
Diagnosis/troubleshooting. 175
4503 Fault code 5526. 176
DME: incorrect accelerator-pedal value. 176
Diagnosis/troubleshooting. 176
4503 Fault code 5527. 177
Transfer via CAN not possible. 177
Diagnosis/troubleshooting. 178
4503 Fault code 5528. 182
DME: non-conforming software version. 182
Diagnosis/troubleshooting. 182
4503 Fault code 5529. 183
Error in CAN message from Tiptronic. 183
Diagnosis/troubleshooting. 183
4503 Fault code 5540. 184
DME: fault stored in ECM. 184
Diagnosis/troubleshooting. 184

61 Convertible top, hardtop
6101 Introduction. 185
General instructions/safety instructions. 185
General information about the fault memory. 186
Diagnostic conditions. 186
Possible causes of fault. 186
Diagnosis/troubleshooting. 186
6101 Tools. 188
6101 Component arrangement. 190
6101 Connector assignment. 192
6101 Control module function. 195
Requirements. 195
Replace control module. 195
Coding. 195
Calibration. 196
Reset actuation counter 2. 197

Reset warning light. . . . 198
6101 Fault overview. . . . 199
6101 Fault code 1. . . . 200
Switch position implausible. . . . 200
6101 Fault code 2. . . . 220
Switch short circuit to ground. . . . 220
6101 Fault code 3. . . . 226
Convertible top pot. fault. . . . 226
6101 Fault code 4. . . . 231
Convertible-top compartment lid pot. fault. . . . 231
6101 Fault code 5. . . . 236
Timeout error. . . . 236
6101 Fault code 6. . . . 243
Calibration required. . . . 243
6101 Fault code 7. . . . 244
Supply voltage. . . . 244

69 Passenger protection
6901 Introduction. . . . 247
Safety notes. . . . 247
General information. . . . 250
General information on the fault memory. . . . 250
6901 Tools. . . . 253
Porsche System Tester II9588. . . . 253
Commercially available digital multimeter. . . . 254
Measurement tool set9684. . . . 254
Test tool9516. . . . 254
Adapter cable9566. . . . 255
Test tool9516/1. . . . 255
Adapter cable9516/2. . . . 255
Test tool9516/4. . . . 256
6901 Component arrangement. . . . 257
6901 Connector assignment. . . . 259
Wiring harness plugs for airbag triggering unit. . . . 259
6901 Control module function. . . . 261
Events. . . . 261
Locking. . . . 261
Coding. . . . 263

6901 Fault overview. 266
6901 Fault codes 1 and 2. 270
Airbag warning light. 270
Diagnosis/troubleshooting. 270
6901 Fault code 3. 272
Supply voltage. 272
Diagnosis/troubleshooting. 272
6901 Fault codes 4, 5, 20, 21, 36. 273
Ignition circuit, driver. 273
Diagnosis/troubleshooting. 273
6901 Fault codes 6, 7, 22, 23, 37. 276
Driver's belt tensioner. 276
Diagnosis/troubleshooting. 277
6901 Fault codes 8, 9, 24, 25, 38. 279
Passenger's belt tensioner. 279
Diagnosis/troubleshooting. 279
6901 Fault codes 10, 11, 26, 27, 39. 281
Ignition circuit, passenger. 281
Diagnosis/troubleshooting. 282
6901 Fault codes 12, 13, 28, 29, 40. 284
Ignition circuit, driver's side airbag. 284
Diagnosis/troubleshooting. 284
6901 Fault codes 14, 15, 30, 31, 41. 286
Ignition circuit, pasenger's side airbag. 286
Diagnosis/troubleshooting. 286
6901 Fault codes 44, 45, 46, 50. 288
Driver's belt buckle. 288
Diagnosis/troubleshooting. 289
6901 Fault codes 47, 48, 49, 51. 291
Passenger's belt buckle. 291
Diagnosis/troubleshooting. 292
6901 Fault codes 52, 85. 294
Driver's side airbag. 294
Diagnosis/troubleshooting. 294
6901 Fault code 53. 295
Driver's side airbag. 295
Diagnosis/troubleshooting. 295

6901 Fault codes 55, 87. 296
Passenger's side airbag. 296
Diagnosis/troubleshooting. 296
6901 Fault code 56. 297
Passenger's side airbag sensor. 297
Diagnosis/troubleshooting. 297
6901 Fault codes 70, 71, 72, 73. 298
Child seat detection. 298
Diagnosis/troubleshooting. 299
6901 Fault code 86. 301
Driver's side airbag sensor. 301
Diagnosis/troubleshooting. 301
6901 Fault code 88. 302
Passenger's side airbag. 302
Diagnosis/troubleshooting. 302
6901 Fault codes above 100. 303
XXX. 303
Diagnosis/troubleshooting. 303
6971 Introduction. 304
Safety notes. 304
General information. 306
General information on the fault memory. 306
Diagnostic conditions. 306
Possible causes of fault. 307
Diagnosis/troubleshooting. 307
6971 Tools. 308
6971 Component arrangement. 310
6971 Connector assignment. 312
Control module plugs. 312
X10 plug connection. 314
Ground point 8. 315
6971 Control module function. 316
Warning light. 316
Replacing control module. 316
Actual values. 317
Drive links. 317
Events. 318
Transport lock. 318

Extract coding. . . . 320
Lock. . . . 321
6971 Fault overview. . . . 323
6971 Fault code 1. . . . 325
Roll-over protection warning light. . . . 325
6971 Fault code 2. . . . 330
Roll-over protection warning light. . . . 330
6971 Fault code 3. . . . 333
Supply voltage. . . . 333
6971 Fault code 4. . . . 335
Solenoid 1 and 2. . . . 335
6971 Fault code 5. . . . 337
Solenoid 1. . . . 337
6971 Fault code 6. . . . 339
Solenoid 1. . . . 339
6971 Fault code 7. . . . 341
Solenoid 1. . . . 341
6971 Fault code 9. . . . 343
Solenoid 2. . . . 343
6971 Fault code 10. . . . 345
Solenoid 2. . . . 345
6971 Fault code 11. . . . 347
Solenoid 2. . . . 347
6971 Fault code 13. . . . 348
Trigger counter. . . . 348
6971 Fault codes 20, 21, 22, 23. . . . 350
Spirit level 1. . . . 350
6971 Fault codes 24, 25, 26, 27. . . . 352
Spirit level 2. . . . 352
6971 Fault code 28. . . . 354
Acceleration sensor. . . . 354
6971 Fault code 100. . . . 356
Solenoid 1 activation. . . . 356
6971 Fault code 101. . . . 361
Solenoid 2 activation. . . . 361
6971 All fault codes 129 to 235. . . . 366
Control module faulty. . . . 366

72 Seats

7298 Introduction. . . . 368
General instructions/safety instructions. . . . 368
General information on the fault memory. . . . 368
Fault memory Info key F8. . . . 369
7298 Tools. . . . 370
Porsche System Tester II9588. . . . 370
7298 Component arrangement. . . . 372
7298 Connector assignment. . . . 374
Connector assignment for seat memory control module. . . . 374
7298 Control unit function. . . . 378
Modifying coding. . . . 378
Communication with alarm system control module. . . . 379
Activating/deactivating the parking aid. . . . 380
General. . . . 380
Activating the parking aid for a position button (switch for memory seat adjustment) without the Porsche System Tester II9588. . . . 381
Activating the parking aid for a hand-held transmitter without the Porsche System Tester II9588. . . . 382
Deactivating the parking aid for a position button (switch for memory seat adjustment) without the Porsche System Tester II9588. . . . 382
Deactivating the parking aid for a hand-held transmitter without the Porsche System Tester II9588. . . . 383
Deactivating automatic seat and mirror adjustment for a hand-held transmitter without the Porsche System Tester II9588. . . . 383
Activating the parking aid for a position button (switch for memory seat adjustment) with the Porsche System Tester II9588. . . . 383
Deactivating the parking aid for a position button (switch for memory seat adjustment) with the Porsche System Tester II9588. . . . 384
Activating the parking aid for a hand-held transmitter with the Porsche System Tester II9588. . . . 385
Deactivating the parking aid for a hand-held transmitter with the Porsche System Tester II9588. . . . 386
Activating automatic seat/mirror adjustment via hand-held transmitter with the Porsche System Tester II9588. . . . 386
Deactivating automatic seat/mirror adjustment via hand-held transmitter with the Porsche System Tester II9588. . . . 387
Selecting rearview mirror lowering, left/right. . . . 388
Setting the lowering angle of the passenger's rearview mirror. . . . 389
. . . . 389
7298 Fault overview. . . . 390

7298 Fault code 1. 392
Control module faulty (main relay does not drop out). 392
Diagnosis/troubleshooting. 392
7298 Fault code 2. 393
Control module faulty (main relay does not pick up). 393
Diagnosis/troubleshooting. 393
7298 Fault code 3. 394
A/D converter faulty. 394
Diagnosis/troubleshooting. 394
7298 Fault code 4. 395
EEPROM fault (checksum). 395
Diagnosis/troubleshooting. 395
7298 Fault code 5. 396
Required position 1 (checksum). 396
Diagnosis/troubleshooting. 396
7298 Fault code 6. 397
Required position 2 (checksum). 397
Diagnosis/troubleshooting. 397
7298 Fault code 7. 398
Required position 3 (checksum). 398
Diagnosis/troubleshooting. 398
7298 Fault code 8. 399
Hall-effect sensor for fore-and-aft adjustment - open circuit. 399
Diagnosis/troubleshooting. 399
7298 Fault code 9. 400
Hall-effect sensor for fore-and-aft adjustment - short circuit. 400
Diagnosis/troubleshooting. 400
7298 Fault code 10. 401
Hall-effect sensor for backrest adjustment - open circuit. 401
Diagnosis/troubleshooting. 401
7298 Fault code 11. 402
Hall-effect sensor for backrest adjustment - short circuit. 402
Diagnosis/troubleshooting. 402
7298 Fault code 12. 403
Hall-effect sensor for front height adjustment - open circuit. 403
Diagnosis/troubleshooting. 403
7298 Fault code 13. 404
Hall-effect sensor for front height adjustment - short circuit. 404

Diagnosis/troubleshooting. . . . 404
7298 Fault code 14. . . . 405
Hall-effect sensor for rear height adjustment - open circuit. . . . 405
Diagnosis/troubleshooting. . . . 405
7298 Fault code 15. . . . 406
Hall-effect sensor for rear height adjustment - short circuit. . . . 406
Diagnosis/troubleshooting. . . . 406
7298 Fault code 18. . . . 407
Lumbar pressure sensor - open circuit. . . . 407
Diagnosis/troubleshooting. . . . 408
7298 Fault code 19. . . . 410
Lumbar pressure sensor - short circuit. . . . 410
Diagnosis/troubleshooting. . . . 411
7298 Fault code 20. . . . 413
Pot. mirror right horizontal - open circuit. . . . 413
Diagnosis/troubleshooting. . . . 414
7298 Fault code 21. . . . 416
Pot. mirror right horizontal - short circuit. . . . 416
Diagnosis/troubleshooting. . . . 417
7298 Fault code 22. . . . 419
Pot. mirror right vertical - open circuit. . . . 419
Diagnosis/troubleshooting. . . . 420
7298 Fault code 23. . . . 423
Pot. mirror right vertical - short circuit. . . . 423
Diagnosis/troubleshooting. . . . 424
7298 Fault code 24. . . . 427
Pot. mirror left vertical - open circuit. . . . 427
Diagnosis/troubleshooting. . . . 428
7298 Fault code 25. . . . 431
Pot. mirror left horizontal - short circuit. . . . 431
Diagnosis/troubleshooting. . . . 432
7298 Fault code 26. . . . 434
Pot. mirror left vertical - open circuit. . . . 434
Diagnosis/troubleshooting. . . . 435
7298 Fault code 27. . . . 438
Pot. mirror left vertical - short circuit. . . . 438
Diagnosis/troubleshooting. . . . 439

7298 Fault code 32. 442
Button M, 1, 2, 3 or operating buttons actuated for longer than 60 s. 442
Diagnosis/troubleshooting. 442

80 Heater

8001 Introduction. 443
General instructions / safety instructions. 443
General information on the fault memory. 443
8001 Tools. 445
Porsche System Tester 2 (PST 2). 445
Commercially available digital multimeter. 445
8001 Component arrangement. 446
8001 Connector assignment. 448
Connector assignment for air-conditioning control module. 448
8001 Control module function. 450
System test. 450
Replacing the air-conditioning system regulator and flashing display. 450
Modify coding. 451
8001 Fault overview. 452
8001 Fault code 21. 454
Outside temperature sensor - short to B+/ short to ground. 454
Diagnosis/troubleshooting. 455
8001 Fault code 22. 457
Interior temperature sensor - short to B+/ short to ground. 457
Diagnosis/troubleshooting. 458
8001 Fault code 23. 459
Footwell blower outlet sensor - Interruption/ ground short. 459
Diagnosis/troubleshooting. 460
8001 Fault code 24. 461
Supply voltage (terminal 15) - voltage too high/ too low. 461
Diagnosis/troubleshooting. 461
8001 Fault code 25. 463
Supply voltage (5 V) - too high/ too low. 463
Diagnosis/troubleshooting. 464
8001 Fault code 26. 466
Temperature mixing valve motor - No reaction to activation, signal unclear. 466
Diagnosis/troubleshooting. 467
8001 Fault code 27. 470

Central flap motor - No reaction to activation, signal unclear. 470
Diagnosis/troubleshooting. 471
8001 Fault code 28. 474
Footwell/defrost flap motor - No reaction to activation, signal unclear. 474
Diagnosis/troubleshooting. 475
8001 Fault code 29. 478
Outside air/recirculation air motor - No reaction to activation, signal unclear. 478
Diagnosis/troubleshooting. 479
8001 Fault code 30. 482
AC - signal unclear. 482
Diagnosis/troubleshooting. 482
8001 Fault code 31. 485
Fresh-air blower motor - voltage too low/ too high. 485
Diagnosis/troubleshooting. 485
8001 Fault code 32. 489
Control unit - control unit faulty. 489
Diagnosis/troubleshooting. 489
8001 Fault code 34. 490
Air-conditioning CAN Bus off. 490
Diagnosis/troubleshooting. 491
8001 Fault code 35. 492
Interface for instrument cluster (see Instrument cluster FS). 492
Diagnosis/troubleshooting. 493
8001 Fault code 36. 494
CAN-timeout instrument cluster. 494
Diagnosis/troubleshooting. 495
8001 Fault code 37. 496
CAN signal PCM. 496
8001 Fault code 38. 497
CAN-timeout PCM. 497

90 Instruments, Fuel Gauge, Alarm System
9025 Introduction. 498
General instructions / safety instructions. 498
General information on the fault memory. 498
9025 Tools. 501
Porsche System Tester 2 (PST 2). 501
Commercially available digital multimeter. 501

9025 Component arrangement. 502
9025 Connector assignment. 504
Instrument cluster connector assignment. 504
9025 Control module function. 508
Events. 508
Coding. 510
Total mileage. 512
Control module replacement. 513
9025 Fault overview. 514
9025 Fault code 9101. 516
CAN drive bus. 516
Diagnosis/troubleshooting. 517
9025 Fault code 9102. 519
CAN comfort bus. 519
Diagnosis/troubleshooting. 520
9025 Fault code 9103. 521
CAN Transceiver. 521
Diagnosis/troubleshooting. 521
9025 Fault code 9110. 522
DME control module. 522
Diagnosis/troubleshooting. 523
9025 Fault code 9111. 524
PSM/ABS control module. 524
Diagnosis/troubleshooting. 525
9025 Fault code 9112. 526
Tiptronic control module. 526
Diagnosis/troubleshooting. 527
9025 Fault code 9115. 528
Air-conditioning control module. 528
Diagnosis/troubleshooting. 529
9025 Fault code 9120. 530
Outside temperature. 530
Diagnosis/troubleshooting. 531
9025 Fault code 9121. 533
Oil pressure. 533
Diagnosis/troubleshooting. 534
9025 Fault code 9122. 535

Tank-fill level. . . . 535
Diagnosis/troubleshooting. . . . 536
9025 Fault code 9123. . . . 538
Oil level. . . . 538
Diagnosis/troubleshooting. . . . 539
9025 Fault code 9124. . . . 541
Sun sensor, short circuit ground/ B+. . . . 541
Diagnosis/troubleshooting. . . . 542
9025 Fault code 9130. . . . 543
Supply voltage. . . . 543
Diagnosis/troubleshooting. . . . 544
9025 Fault code 9131. . . . 545
B+. . . . 545
Diagnosis/troubleshooting. . . . 545
9025 Fault code 9132. . . . 547
Terminal 61. . . . 547
Diagnosis/troubleshooting. . . . 547
9025 Fault code 9133. . . . 548
Terminal 61 low when engine running. . . . 548
Diagnosis/troubleshooting. . . . 548
9025 Fault code 9140. . . . 549
Failure of airbag warning light. . . . 549
Diagnosis/troubleshooting. . . . 549
9025 Fault code 9142. . . . 550
Failure of cruise control warning light. . . . 550
Diagnosis/troubleshooting. . . . 550
9025 Fault code 9143. . . . 551
Failure of Check Engine warning light. . . . 551
Diagnosis/troubleshooting. . . . 551
9025 Fault code 9144. . . . 552
Failure of ABS warning light. . . . 552
Diagnosis/troubleshooting. . . . 552
9025 Fault code 9150. . . . 553
Spoiler control. . . . 553
Diagnosis/troubleshooting. . . . 555
9025 Introduction. . . . 562
General instructions/safety instructions. . . . 562
General information about the fault memory. . . . 562

9025 Tools. . . . 565
Porsche System Tester ll9588. . . . 565
9025 Component arrangement. . . . 566
9025 Connector assignment. . . . 568
Instrument cluster connector assignment. . . . 568
9025 Control module function. . . . 572
Events. . . . 572
Coding. . . . 574
Total mileage. . . . 580
Control module replacement. . . . 581
9025 Fault overview. . . . 582
9025 Fault code 9101. . . . 584
CAN drive bus. . . . 584
Diagnosis/troubleshooting. . . . 585
9025 Fault code 9102. . . . 587
CAN comfort bus. . . . 587
Diagnosis/troubleshooting. . . . 588
9025 Fault code 9103. . . . 589
CAN Transceiver. . . . 589
Diagnosis/troubleshooting. . . . 589
9025 Fault code 9110. . . . 590
DME control module. . . . 590
Diagnosis/troubleshooting. . . . 591
9025 Fault code 9111. . . . 592
PSM/ABS control module. . . . 592
Diagnosis/troubleshooting. . . . 593
9025 Fault code 9112. . . . 594
Tiptronic control module. . . . 594
Diagnosis/troubleshooting. . . . 595
9025 Fault code 9114. . . . 596
PCM2 timeout (if control module is coded). . . . 596
Diagnosis/troubleshooting. . . . 597
9025 Fault code 9115. . . . 598
Air-conditioning control module. . . . 598
Diagnosis/troubleshooting. . . . 599
9025 Fault code 9120. . . . 600
Outside temperature. . . . 600

Diagnosis/troubleshooting. 601
9025 Fault code 9121. 603
Oil pressure. 603
Diagnosis/troubleshooting. 604
9025 Fault code 9122. 605
Tank level. 605
Diagnosis/troubleshooting. 606
9025 Fault code 9123. 608
Oil level. 608
Diagnosis/troubleshooting. 609
9025 Fault code 9124. 611
Sun sensor, short circuit to ground/B+. 611
Diagnosis/troubleshooting. 612
9025 Fault code 9130. 613
Supply voltage. 613
Diagnosis/troubleshooting. 614
9025 Fault code 9131. 615
B+. 615
Diagnosis/troubleshooting. 615
9025 Fault code 9132. 617
Pin 61. 617
Diagnosis/troubleshooting. 617
9025 Fault code 9133. 618
Pin 61 low when engine running. 618
Diagnosis/troubleshooting. 618
9025 Fault code 9140. 619
Failure of airbag warning light. 619
Diagnosis/troubleshooting. 619
9025 Fault code 9142. 620
Failure of cruise control warning light. 620
Diagnosis/troubleshooting. 620
9025 Fault code 9143. 621
Failure of Check Engine warning light. 621
Diagnosis/troubleshooting. 621
9025 Fault code 9144. 622
Failure of ABS warning light. 622
Diagnosis/troubleshooting. 622

9025 Fault code 9145. 623
Failure of roll-over bar warning light. 623
Diagnosis/troubleshooting. 623
9025 Fault code 9150. 624
Spoiler control. 624
Diagnosis/troubleshooting. 626

91 Radio
9101 Introduction. 633
General instructions / safety instructions. 633
General information on the fault memory. 634
9101 Tools. 635
Porsche System Tester 2 (PST 2). 635
Commercially available digital multimeter. 635
9101 Component arrangement. 636
9101 Connector assignment. 638
Connector assignment, ParkAssistent control module. 638
9101 Control module function. 640
Modify coding. 640
9101 Fault overview. 641
9101 Fault code 1. 642
Outer right sensor faulty. 642
Diagnosis/troubleshooting. 643
9101 Fault code 2. 646
Inner right sensor faulty. 646
Diagnosis/troubleshooting. 647
9101 Fault code 3. 650
Inner left sensor faulty. 650
Diagnosis/troubleshooting. 651
9101 Fault code 4. 653
Outer left sensor faulty. 653
Diagnosis/troubleshooting. 654
9101 Fault code 5. 657
Control unit supply voltage < 9 V or 16.5 V. 657
Diagnosis/troubleshooting. 658
9101 Fault code 6. 659
Sensor supply voltage < 6.7 V. 659
Diagnosis/troubleshooting. 660

9101 Fault code 7. 661
Send/receive pulse. 661
Diagnosis/troubleshooting. 661
9101 Fault code 8. 662
EPROM data faulty or parameter set not programmed. 662
Diagnosis/troubleshooting. 662
9101 Fault code 9. 663
EPROM data faulty or parameter set coded incorrectly. 663
Diagnosis/troubleshooting. 663
9101 Gateway - introduction. 664
General instructions/safety instructions. 664
General information on the fault memory. 665
Display * in the menu Control modules and menu PCM2 MOST component check 666
Units. 666
Vehicle type vehicle coding. 666
Vehicle version vehicle coding. 667
Right/left-hand drive vehicle coding. 667
Vehicle hand-over. 667
Air conditioning. 667
Country-specific tuner settings. 668
Coding country-specific tuner settings. 668
MOST switch. 668
Coding PCM2. 669
Production mode. 669
Control module replacement - PCM2. 670
9101 Tools - gateway. 671
9101 Component arrangement - gateway. 673
9101 Connector assignment - gateway. 677
Connector assignment. 677
9101 Control unit function - gateway. 680
Terminating resistors on the CAN. 680
CAN comfort. 680
CD changer (CDC). 680
Coding table. 680
Coding. 683
Data transfer fault. 689
Extended fault memory. 690
Extended identification. 691

Function of the components. 692
Gateway. 693
Identification. 693
Actual values. 694
Man Machine Interface (MMI). 695
MOST actual and required installed components lists. 696
MOST component check. 696
MOST lock/unlock. 699
MOST - optical/electrical. 699
MOST switch. 700
Navigation. 700
Ring break diagnosis line. 700
Input signals. 700
Single CD. 703
Voice control system (VOCS). 703
PCM2 control module (head unit). 703
Drive links. 704
Telephone/telematics. 705
Tuner. 705
External amplifier. 705
Internal amplifier. 705
Wake-up function. 705

9101 Fault overview - gateway. 707

9101 8001 PCM2 - Gateway. 708
Supply voltage. 708
Diagnostic conditions. 708
Battery voltage too low. 709
Diagnosis/troubleshooting. 709
Battery voltage too high. 709
Diagnosis/troubleshooting. 709

9101 8002 PCM2 - gateway. 711
Control module faulty (PCM2). 711
Diagnosis/troubleshooting on the PCM2. 712

9101 8004 PCM2 - gateway. 713
CAN comfort bus OFF. 713
Diagnosis/troubleshooting. 714

9101 8005 PCM2 - gateway. 716
CAN comfort timeout, instrument cluster. 716
Diagnosis/troubleshooting. 717

9101 800A PCM2 - gateway. 719
CAN comfort timeout, air-conditioning system. 719
Diagnosis/troubleshooting. 721
9101 800B PCM2 - gateway. 723
CAN comfort signal fault, instrument cluster. 723
Diagnosis/troubleshooting. 725
9101 MMI - introduction. 727
General instructions/safety instructions. 727
General information on the fault memory. 728
Display * in the menu Control modules and menu PCM2 MOST component check 729
Vehicle hand-over. 730
Country-specific tuner settings. 730
Coding country-specific tuner settings. 730
Coding PCM2. 731
Production mode. 731
Control module replacement - PCM2. 732
9101 Tools - MMI. 733
9101 Component arrangement - MMI. 735
9101 MMI connector assignment. 739
Connector assignment. 739
9101 Control unit function - MMI. 742
Terminating resistors in the CAN. 742
CAN comfort. 742
CD changer (CDC). 742
Coding table. 742
Coding. 745
Data transfer fault. 755
Extended fault memory. 755
Extended identification. 756
Function of the components. 757
Gateway. 758
Identification. 759
Actual values. 759
Man Machine Interface (MMI). 762
MOST actual and required installed components lists. 763
MOST lock/unlock. 763
MOST component check. 763
MOST - optical/electrical. 767

MOST switch. 767
Navigation. 768
Ring break diagnosis line. 768
Drive links. 768
PCM2 control module (head unit). 769
Input signals. 770
Single CD. 771
Voice control system (VOCS). 772
Telephone/telematics. 772
Tuner. 772
Unlock counter. 772
External amplifier. 772
Internal amplifier. 772
Wake-up function. 772

9101 Fault overview - MMI. 773

9101 8002 PCM2 - MMI. 774
Internal communication error. 774
Diagnosis/troubleshooting on the PCM2. 775

9101 8003 PCM2 - MMI. 776
Operating buttons are jammed. 776
Diagnosis/troubleshooting. 777

9101 8004 PCM2 - MMI. 778
Single CD drive overheating. 778
Diagnosis/troubleshooting. 779

9101 8005 PCM2 - MMI. 780
CD cannot be read. 780
Diagnosis/troubleshooting. 781

9101 8006 PCM2 - MMI. 782
Internal fault in single CD drive. 782
Diagnosis/troubleshooting. 783

9101 8007 PCM2 - MMI. 784
Ring break diagnosis line open circuit. 784
Diagnosis/troubleshooting. 786

9101 8009 PCM2 - MMI. 788
MOST fault, optical/electrical. 788
Diagnosis/troubleshooting. 790

9101 800C PCM2 - MMI. 793
Fault during software update using single CD. 793

Diagnosis/troubleshooting. . . . 794
9101 Introduction – external Harman amplifier. . . . 795
General instructions/safety instructions. . . . 795
General information on the fault memory. . . . 796
Vehicle hand-over. . . . 797
Production mode. . . . 798
Replacing CDR23 control modules. . . . 798
Control module replacement - PCM2. . . . 799
9101 Tools - external Harman amplifier. . . . 800
9101 Component arrangement - external Harman amplifier. . . . 802
9101 Connector pin assignment - external Harman amplifier. . . . 806
Connector assignment. . . . 806
9101 Control module function - external Harman amplifier. . . . 808
Terminating resistors on the CAN. . . . 808
Audio tests. . . . 808
CAN comfort. . . . 809
CD changer (CDC). . . . 809
Coding table. . . . 809
Coding. . . . 812
Data transfer fault. . . . 814
Function of the components. . . . 815
Gateway. . . . 816
Identification. . . . 816
Actual values. . . . 817
Lock/unlock. . . . 819
Man Machine Interface (MMI). . . . 819
Navigation. . . . 820
MOST actual and required installed components lists. . . . 820
MOST - optical/electrical. . . . 820
MOST switch. . . . 820
Ring break diagnosis line. . . . 821
Input signals. . . . 821
Single CD. . . . 822
Drive links. . . . 822
PCM2 control module (head unit). . . . 823
Telephone/telematics. . . . 823
Tuner. . . . 824
Unlock counter. . . . 824
External amplifier. . . . 824

Internal amplifier. . . . 824
Wake-up function. . . . 824
9101 Fault overview – external Harman amplifier. . . . 825
9101 8001 Harman external amplifier. . . . 826
Supply voltage. . . . 826
Diagnosis/troubleshooting. . . . 827
9101 8002 External Harman amplifier. . . . 828
Malfunction in internal memory. . . . 828
Diagnosis/troubleshooting on the external amplifier. . . . 829
9101 8003 External Harman amplifier. . . . 830
Malfunction in front loudspeaker. . . . 830
Diagnosis/troubleshooting for Harman. . . . 831
9101 8004 Harman external amplifier. . . . 835
Rear loudspeaker channel faulty. . . . 835
Diagnosis/troubleshooting. . . . 836
9101 8005 External Harman amplifier. . . . 838
Malfunction in left subwoofer channel. . . . 838
Diagnosis/troubleshooting. . . . 839
9101 8006 External Harman amplifier. . . . 841
Malfunction in right subwoofer channel. . . . 841
Diagnosis/troubleshooting. . . . 842
9101 8007 External Harman amplifier. . . . 844
No load on left subwoofer. . . . 844
Diagnosis/troubleshooting for Harman. . . . 845
9101 8008 External Harman amplifier. . . . 847
No load on right subwoofer. . . . 847
Diagnosis/troubleshooting. . . . 848
9101 8009 External Harman amplifier. . . . 850
Incorrect coding. . . . 850
Diagnosis/troubleshooting for Harman. . . . 851
9101 Introduction - external BOSE amplifier. . . . 852
General instructions/safety instructions. . . . 852
General information on the fault memory. . . . 853
Display * in the menu Control modules and menu PCM2 MOST component check 854
Vehicle hand-over. . . . 854
Production mode. . . . 855
Control module replacement - PCM2. . . . 855

9101 Tools - external BOSE amplifier. 856
9101 Component arrangement - external BOSE amplifier. 858
9101 Connector pin assignment - external BOSE amplifier. 862
Connector assignment. 862
9101 Control module function - external BOSE amplifier. 865
Terminating resistors on the CAN. 865
CAN comfort. 865
CD changer (CDC). 865
Coding table. 865
Coding. 868
Data transfer fault. 869
Function of the components. 870
Gateway. 871
Identification. 871
Actual values. 872
Man Machine Interface (MMI). 874
MOST actual and required installed components lists. 874
MOST component check. 874
MOST lock/unlock. 878
MOST - optical/electrical. 878
MOST switch. 879
Navigation. 879
Ring break diagnosis line. 879
Input signals. 880
Single CD. 882
Voice control system (VOCS). 882
Drive links. 882
PCM2 control module (head unit). 883
Telephone/telematics. 884
Tuner. 884
External amplifier. 884
Internal amplifier. 884
Wake-up function. 884
9101 Fault overview - external BOSE amplifier. 885
9101 8001 External BOSE amplifier. 887
Supply voltage. 887
Battery voltage too high. 888
Diagnosis/troubleshooting. 888

9101 8002 External BOSE amplifier. 890
Malfunction in internal memory. 890
Diagnosis/troubleshooting on the external amplifier. 891
9101 8003 External BOSE amplifier. 892
Fault in front left loudspeaker channel/left door speaker. 892
Diagnosis/troubleshooting – BOSE. 893
9101 8004 BOSE external amplifier. 895
Rear loudspeaker channel faulty. 895
Diagnosis/Troubleshooting BOSE. 896
9101 8005 External BOSE amplifier. 898
Malfunction in rear left loudspeaker channel/right door speaker. 898
Bose diagnosis/troubleshooting. 899
9101 8009 External BOSE amplifier. 901
Incorrect coding/programming. 901
Diagnosis/troubleshooting BOSE. 902
9101 800A External BOSE amplifier. 903
Microphone signal faulty. 903
Diagnosis/troubleshooting. 904
9101 800B External BOSE amplifier. 906
Microphone signal faulty. 906
Diagnosis/troubleshooting. 907
9101 8011 External BOSE amplifier. 909
Malfunction in front left loudspeaker. 909
Diagnosis/troubleshooting. 910
9101 8012 External BOSE amplifier. 912
Malfunction in front right loudspeaker. 912
Diagnosis/troubleshooting. 913
9101 8013 External BOSE amplifier. 915
Malfunction in rear left loudspeaker. 915
Diagnosis/troubleshooting. 916
9101 8014 External BOSE amplifier. 918
Malfunction in rear right loudspeaker. 918
Diagnosis/troubleshooting. 919
9101 8015 External BOSE amplifier. 921
Malfunction in loudspeaker for left door speaker. 921
Diagnosis/troubleshooting. 922
9101 8016 External BOSE amplifier. 924
Malfunction in loudspeaker for right door speaker. 924

Diagnosis/troubleshooting. . . . 925
9101 8017 External BOSE amplifier. . . . 927
Subwoofer faulty. . . . 927
Diagnosis/troubleshooting. . . . 928
9101 8018 External BOSE amplifier. . . . 930
Malfunction in rear subwoofer. . . . 930
Diagnosis/troubleshooting. . . . 931
9101 Telephone/telematics - Introduction. . . . 933
General instructions/safety instructions. . . . 933
General information on the fault memory. . . . 934
Display * in the menu Control modules and menu PCM2 MOST component check 935
Control module replacement - PCM2. . . . 936
9101 Telephone/telematics tools. . . . 937
9101 Component arrangement - telephone/telematics. . . . 939
9101 Telephone/telematics connector assignment. . . . 941
Connector assignment. . . . 941
9101 Telephone/telematics control module function. . . . 943
Terminating resistors on the CAN. . . . 943
CAN comfort. . . . 943
CD changer (CDC). . . . 943
Coding table. . . . 943
Coding. . . . 945
Data transfer fault. . . . 946
Installation position of the control module. . . . 947
Function of the components. . . . 947
Gateway. . . . 948
Identification. . . . 948
Actual values. . . . 949
Lock/unlock. . . . 949
Man Machine Interface (MMI). . . . 950
MOST actual and required installed components lists. . . . 950
MOST - optical/electrical. . . . 950
MOST switch. . . . 950
Navigation. . . . 951
Ring break diagnosis line. . . . 951
Input signals. . . . 951
Voice control system (VOCS). . . . 952
PCM2 control module (head unit). . . . 952

Drive links. . . . 953
Telephone/telematics. . . . 954
Tuner. . . . 954
Unlock counter. . . . 954
External amplifier. . . . 954
Internal amplifier. . . . 955
Wake-up function. . . . 955
9101 Telephone/telematics fault overview. . . . 956
9101 9603 Telephone/telematics. . . . 957
Handset error. . . . 957
Diagnosis/troubleshooting. . . . 958
9101 9604 Telephone/telematics. . . . 963
GSM antenna fault. . . . 963
Diagnosis/troubleshooting. . . . 964
9101 9605 Telephone/telematics. . . . 970
RAM navigation fault. . . . 970
Diagnosis/troubleshooting. . . . 971
9101 9606 Telephone/telematics. . . . 972
No MOST communication. . . . 972
Diagnosis/troubleshooting. . . . 973
9101 Navigation - introduction. . . . 975
General instructions/safety instructions. . . . 975
General information on the fault memory. . . . 976
Display * in the menu Control modules and menu PCM2 MOST component check 977
Vehicle hand-over. . . . 978
Country-specific tuner settings. . . . 978
Coding country-specific tuner settings. . . . 978
Coding PCM2. . . . 979
Production mode. . . . 979
Control module replacement - PCM2. . . . 980
9101 Navigation tools. . . . 981
9101 Component arrangement - navigation. . . . 983
9101 Navigation connector assignment. . . . 985
Connector assignment. . . . 985
9101 Navigation control unit function. . . . 988
Terminating resistors in the CAN. . . . 988
CAN comfort. . . . 988

CD changer (CDC). 988
Coding table. 988
Coding. 991
Data transmission error. 1000
Function of the components. 1001
Gateway. 1002
Identification. 1002
Actual values. 1003
Lock/Unlock. 1003
Man Machine Interface (MMI). 1003
MOST actual and required installed components lists. 1003
MOST - optical/electrical. 1003
MOST switch. 1004
Navigation. 1004
Ring break diagnosis line. 1004
Input signals. 1005
Single CD. 1005
Voice control system (VOCS). 1005
Drive links. 1005
PCM2 control unit (head unit). 1007
Telephone/telematics. 1007
Tuner. 1007
Unlock counter. 1007
External amplifier. 1008
Internal amplifier. 1008
Wake-up function. 1008

9101 Navigation fault overview. 1009

9101 8002 Navigation. 1010
Internal communication error - PCM2 Navigation. 1010
Diagnosis/troubleshooting on the PCM2 navigation unit. 1011

9101 8020 Navigation. 1012
GPS antenna short circuit. 1012
Diagnosis/troubleshooting. 1013

9101 8021 Navigation. 1015
Open circuit in GPS antenna. 1015
Diagnosis/troubleshooting. 1016

9101 8025 Navigation. 1018
Data CD cannot be read. 1018
Diagnosis/troubleshooting. 1019

9101 CDR23 - Introduction. 1020
General instructions/safety instructions. 1020
General information on the fault memory. 1021
Display * in the menu Control modules CDR23 and menu MOST component check 1023
CDR23 Replacement. 1023
Production mode. 1023
9101 CDR23 tools. 1025
9101 Component arrangement - CDR23. 1027
9101 CDR23 connector assignment. 1031
Connector assignment. 1031
9101 CDR23 control unit function. 1034
Terminating resistors on the CAN. 1034
CAN comfort. 1034
CD changer (CDC). 1034
Coding table. 1034
Coding. 1036
Data transmission error. 1041
Gateway. 1041
Identification. 1041
Actual values. 1042
Lock/Unlock. 1044
MOST actual and required installed components lists. 1045
MOST component check. 1045
MOST - optical. 1048
Ring break diagnosis line. 1049
Input signals. 1049
Single CD. 1051
Drive links. 1052
CDR23 control unit. 1052
Tuner. 1053
Unlock counter. 1053
External amplifier. 1053
Internal amplifier. 1053
Wake-up function. 1053
9101 CDR23 fault overview. 1055
9101 8001 CDR23. 1056
Voltage supply. 1056
Diagnosis/troubleshooting. 1057

9101 8004 CDR23. 1058
CAN comfort bus OFF. 1058
Diagnosis/troubleshooting. 1059
9101 8005 CDR23. 1061
CAN timeout, instrument cluster. 1061
Diagnosis/troubleshooting. 1062
9101 8007 CDR23. 1063
Open circuit in diagnosis distribution line. 1063
Diagnosis/troubleshooting. 1064
9101 8009 CDR23. 1067
Open circuit in MOST distribution line, optical/electrical open circuit. 1067
Diagnosis/troubleshooting. 1068
9101 800A CDR23. 1071
CAN bus timeout, air-conditioning system. 1071
Diagnosis/troubleshooting. 1073
9101 800B CDR23. 1075
CAN comfort timeout, instrument cluster. 1075
Diagnosis/troubleshooting. 1077
9101 8013 CDR23. 1079
Operating buttons are jammed. 1079
Diagnosis/troubleshooting. 1080
9101 8014 CDR23. 1081
CDR23 overheating. 1081
Diagnosis/troubleshooting. 1082
9101 8015 CDR23. 1083
CD cannot be read. 1083
Diagnosis/troubleshooting. 1084
9101 8016 CDR23. 1085
CD cannot be read. 1085
Diagnosis/troubleshooting. 1086
9101 Introduction - CD changer. 1087
General instructions/safety instructions. 1087
General information on the fault memory. 1088
Indication * in the Control units menu.. 1089
Control unit replacement. 1089
9101 Tools - CD changer. 1090
9101 Component arrangement - CD changer. 1092

9101 CD changer connector assignment. . . . 1096
CD changer connector assignment. . . . 1096
9101 Control unit function - CD changer. . . . 1098
Terminating resistors on the CAN. . . . 1098
CAN comfort. . . . 1098
CD changer (CDC). . . . 1098
Coding. . . . 1098
Data transmission error. . . . 1099
Function of the components. . . . 1100
Gateway. . . . 1101
Identification. . . . 1101
Actual values. . . . 1102
Lock/Unlock. . . . 1102
Man Machine Interface (MMI). . . . 1103
MOST actual and required installed components lists. . . . 1103
MOST - optical/electrical. . . . 1103
MOST switch. . . . 1103
Navigation. . . . 1104
Ring break diagnosis line. . . . 1104
Input signals. . . . 1104
Single CD. . . . 1105
Voice control system (VOCS). . . . 1105
PCM2 control unit (head unit). . . . 1105
Telephone/telematics. . . . 1106
Tuner. . . . 1106
Unlock counter. . . . 1106
External amplifier. . . . 1106
Internal amplifier. . . . 1106
Wake-up function. . . . 1107
9101 CD changer fault overview. . . . 1108
9101 8001 CD changer. . . . 1109
Audio CD read error. . . . 1109
Diagnosis/troubleshooting. . . . 1110
9101 8002 CD changer. . . . 1111
Read speed control fault. . . . 1111
Diagnosis/troubleshooting on the PCM2/CDR23. . . . 1112
9101 8003 CD changer. . . . 1113
Audio CD read error (formatting error on CD). . . . 1113
Diagnosis/troubleshooting. . . . 1114

9101 8004 CD changer. 1115
Fault in speed control unit. 1115
Diagnosis/troubleshooting. 1116
9101 8005 CD changer. 1117
Mechanical fault in read unit control. 1117
Diagnosis/troubleshooting. 1118
9101 8006 CD changer. 1119
Mechanical fault while inserting CD into magazine. 1119
Diagnosis/troubleshooting. 1119
9101 8007 CD changer. 1120
Mechanical fault while removing CD from magazine. 1120
Diagnosis/troubleshooting. 1121
9101 8008 CD changer. 1122
Mechanical fault while lifting audio CD into reader. 1122
Diagnosis/troubleshooting. 1123
9101 8009 CD changer. 1124
Mechanical fault while removing audio CD from reader. 1124
Diagnosis/troubleshooting. 1125
9101 800A CD changer. 1126
Mechanical fault while ejecting magazine. 1126
Diagnosis/troubleshooting. 1127
9101 800B CD changer. 1128
Internal communication fault in CD changer. 1128
Diagnosis/troubleshooting. 1129
9101 8011 CD changer. 1130
Malfunction in internal memory. 1130
Diagnosis/troubleshooting. 1131

94 Exterior Lights, Lamps, Switches

9492 Introduction. 1132
General instructions / safety instructions. 1132
General information on the fault memory. 1132
9492 Tools. 1134
Porsche System Tester 2 (PST 2). 1134
Commercially available digital multimeter. 1134
9492 Component arrangement. 1135
9492 Connector assignment. 1137
Connector assignment for HBA control module. 1137

9492 Control module function. 1139
Coding. 1139
Calibration. 1139
9492 Fault overview. 1141
9492 Fault code 1. 1142
Engine path, left. 1142
Diagnosis/Troubleshooting. 1143
9492 Fault code 2. 1145
Engine path, right. 1145
Diagnosis/Troubleshooting. 1146
9492 Fault code 3. 1148
Axle position sensor, front (angle sensor for HBA). 1148
Diagnosis/Troubleshooting. 1149
9492 Fault code 4. 1151
Axle position sensor, rear (angle sensor for HBA). 1151
Diagnosis/Troubleshooting. 1152
9492 Fault code 5. 1154
5 V supply for axle position sensors (angle sensors for HBA). 1154
Diagnosis/Troubleshooting. 1155
9492 Fault code 6. 1158
Control unit coding error. 1158
Diagnosis/Troubleshooting. 1158
9492 Fault code 7. 1159
Calibration not performed yet. 1159
Diagnosis/Troubleshooting. 1159

96 Lights, lamps, switches interior, theft protection

96001 Introduction. 1161
General instructions / safety instructions. 1161
General information on the fault memory. 1161
9601 Tools. 1163
Porsche System Tester 2 (PST 2). 1163
Special tool 9616. 1163
Commercially available digital multimeter. 1163
Special tool 9617. 1164
9601 Component arrangement. 1165
9601 Connector assignment. 1167
Connector assignment for alarm system control module. 1167

9601 Control module function. . . . 1170
Communication with seat memory control module. . . . 1170
Activation status memory. . . . 1170
Coding. . . . 1171
System test. . . . 1178
Interior monitor. . . . 1178
Learning function. . . . 1178
Teaching hand-held transmitter. . . . 1179
Reading out and transferring remote control. . . . 1183
Identification. . . . 1187
96001 Fault overview. . . . 1188
9601 Fault code 1. . . . 1192
Door(s) secured and terminal 15 on. . . . 1192
Diagnosis/troubleshooting. . . . 1193
9601 Fault code 2. . . . 1195
Door lock barrel "closed", activated longer than 60 s. . . . 1195
Diagnosis/troubleshooting. . . . 1196
9601 Fault code 3. . . . 1197
Door lock barrel "open", activated longer than 60 s. . . . 1197
Diagnosis/troubleshooting. . . . 1198
9601 Fault code 4. . . . 1199
Door lock barrel "closed", short circuit to ground. . . . 1199
Diagnosis/troubleshooting. . . . 1200
9601 Fault code 5. . . . 1201
Door lock barrel "open", short circuit to ground. . . . 1201
Diagnosis/troubleshooting. . . . 1202
9601 Fault code 6. . . . 1203
Door lock barrel "open/closed", short circuit to ground. . . . 1203
Diagnosis/troubleshooting. . . . 1204
9601 Fault code 7. . . . 1206
Central locking button closed, short circuit to B+. . . . 1206
Diagnosis/troubleshooting. . . . 1207
9601 Fault code 8. . . . 1209
Central locking button open, short circuit to B+. . . . 1209
Diagnosis/troubleshooting. . . . 1210
9601 Fault code 9. . . . 1212
Central locking button open/closed, short circuit to B+. . . . 1212
Diagnosis/troubleshooting. . . . 1213

9601 Fault code 10. 1215
Voltage failure at terminal 30 with alarm system active. 1215
Diagnosis/troubleshooting. 1216
9601 Fault code 11. 1217
Voltage failure during alarm output. 1217
Diagnosis/troubleshooting. 1218
9601 Fault code 12. 1219
Wrong door lock module. 1219
Diagnosis/troubleshooting. 1219
9601 Fault code 13. 1220
Left door secured but not locked. 1220
Diagnosis/troubleshooting. 1221
9601 Fault code 14. 1222
Right door secured but not locked. 1222
Diagnosis/troubleshooting. 1223
9601 Fault code 15. 1224
Control module faulty. 1224
Diagnosis/troubleshooting. 1224
9601 Fault code 16. 1225
Signal from airbag, short circuit to B+. 1225
Diagnosis/troubleshooting. 1226
9601 Fault code 17. 1227
Signal from airbag, short circuit to ground. 1227
Diagnosis/troubleshooting. 1228
9601 Fault code 18. 1229
Power window control, short circuit to ground. 1229
Diagnosis/troubleshooting. 1230
9601 Fault code 19. 1232
Status lead, signal converter, short circuit to B+. 1232
Diagnosis/troubleshooting. 1233
9601 Fault code 20. 1234
Status lead, signal converter, short circuit to ground. 1234
Diagnosis/troubleshooting. 1234
9601 Fault code 21. 1235
W lead (DME - immobilizer), open circuit. 1235
Diagnosis/troubleshooting. 1235
9601 Fault code 22. 1236
Passenger compartment monitoring sensor, short circuit to ground. 1236

Diagnosis/troubleshooting. 1236
9601 Fault code 23. 1237
W lead (DME - immobilizer), short circuit to B+. 1237
Diagnosis/troubleshooting. 1237
9601 Fault code 24. 1238
Control module faulty. 1238
Diagnosis/troubleshooting. 1238
9601 Fault code 25. 1239
No terminal 86 S recognised. 1239
Diagnosis/troubleshooting. 1240
9601 Fault code 26. 1241
Version error (recoding required). 1241
Diagnosis/troubleshooting. 1241
9601 Fault code 27. 1242
Control module faulty. 1242
Diagnosis/troubleshooting. 1242
9601 Fault code 28. 1243
Control module faulty. 1243
Diagnosis/troubleshooting. 1243
9601 Fault code 29. 1244
Control module faulty. 1244
Diagnosis/troubleshooting. 1244
9601 Fault code 30. 1245
Control module faulty. 1245
Diagnosis/troubleshooting. 1245
9601 Fault code 31. 1246
Transponder (reteaching required). 1246
Diagnosis/troubleshooting. 1246
9601 Fault code 32. 1247
Passenger compartment monitoring sensor, short circuit to B+ or faulty. 1247
Diagnosis/troubleshooting. 1247
9601 Fault code 33. 1248
Passenger compartment monitoring sensor faulty. 1248
Diagnosis/troubleshooting. 1248
9601 Fault code 34. 1249
Passenger compartment monitoring sensor, short circuit to B+ or faulty. 1249
Diagnosis/troubleshooting. 1250

9601 Fault code 35. 1251
Passenger compartment monitoring sensor faulty. 1251
Diagnosis/troubleshooting. 1251
9601 Fault code 36. 1252
Passenger compartment monitoring sensor, short circuit to B+ or faulty. 1252
Diagnosis/troubleshooting. 1252
9601 Fault code 37. 1253
Passenger compartment monitoring sensor faulty. 1253
Diagnosis/troubleshooting. 1253
9601 Fault code 39. 1254
Signal converter faulty. 1254
Diagnosis/troubleshooting. 1255
9601 Fault code 40. 1257
Signal converter coil fault. 1257
Diagnosis/troubleshooting. 1258
9601 Fault code 41. 1259
Transponder pill faulty or not present. 1259
Diagnosis/troubleshooting. 1259
9601 Fault code 42. 1260
Wrong key or wrong transponder pill. 1260
Diagnosis/troubleshooting. 1261
9601 Fault code 43. 1263
Passenger-side release stuck. 1263
Diagnosis/troubleshooting. 1264
9601 Fault code 44. 1266
Driver-side release stuck. 1266
Diagnosis/troubleshooting. 1267
9601 Fault code 45. 1269
Servo motor, central locking system, short circuit to B+. 1269
Diagnosis/troubleshooting. 1270
9601 Fault code 46. 1272
Central locking synchronisation. 1272
Diagnosis/troubleshooting. 1273
9601 Fault code 47. 1275
Central locking synchronisation. 1275
Diagnosis/troubleshooting. 1276
9601 Fault code 48. 1278
Airbag signal recognized. 1278

Diagnosis/troubleshooting. 1278
9601 Fault code 49. 1279
K lead. 1279
Diagnosis/troubleshooting. 1279
9601 Fault code 50. 1280
Radio transmitter code. 1280
Diagnosis/troubleshooting. 1280
9601 Fault code 51. 1281
Alarm siren. 1281
Diagnosis/troubleshooting. 1281
9601 Fault code 52. 1282
Door lock barrel "open", activated longer than 60 s. 1282
Diagnosis/troubleshooting. 1283
9601 Fault code 53. 1284
EPROM fault (checksum). 1284
Diagnosis/troubleshooting. 1284
9601 Fault code 54. 1285
Radio receiver defective. 1285
Diagnosis/troubleshooting. 1285
9601 Fault code 58. 1286
No current in tank servomotor despite relay actuation. 1286
Diagnosis/troubleshooting. 1287
9601 Fault code 59. 1289
Central locking limit position - safe not reached. 1289
Diagnosis/troubleshooting. 1290
9601 Fault code 60. 1292
Central locking limit position - locked not reached. 1292
Diagnosis/troubleshooting. 1293
9601 Fault code 61. 1297
Central locking limit position - unlocked not reached. 1297
Diagnosis/troubleshooting. 1298

General

Installation location, diagnostic socket

Installation location, diagnostic socket

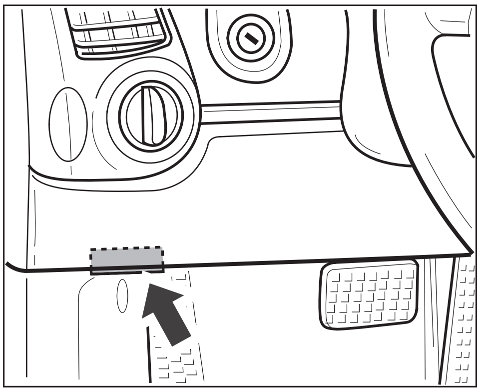

Operating instructions Porsche System Tester II No. 9588

General information

[illegible]

Danger of injury when driving and working on the vehicle.

- ***Never hang the Porsche System Tester II No. 9588 over the steering wheel***
- ***Tools and special tools should in general be kept away from all airbag operating areas and the roll-over protection strap area.***

[illegible]

Malfunctions

[illegible]

[illegible] F1 [illegible] F8 [illegible] ON/OFF [illegible]

[illegible] ON/off [illegible] F1 [illegible] F8

[illegible]

♦

♦

♦

Design of the Tester

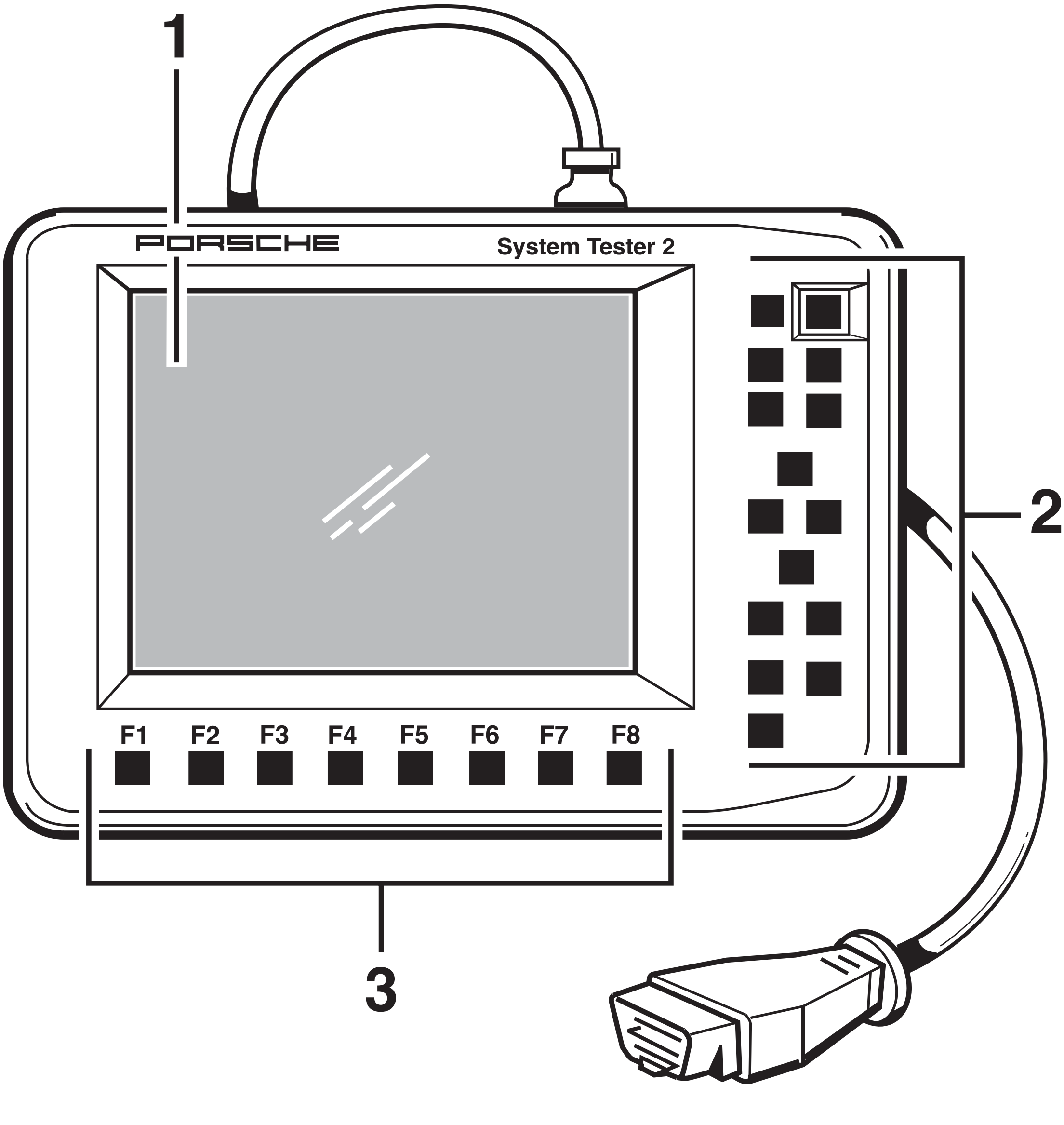

□ □ □□□□□□□□□□□□□□□□

- □□□□□□□□□□□□□□□□

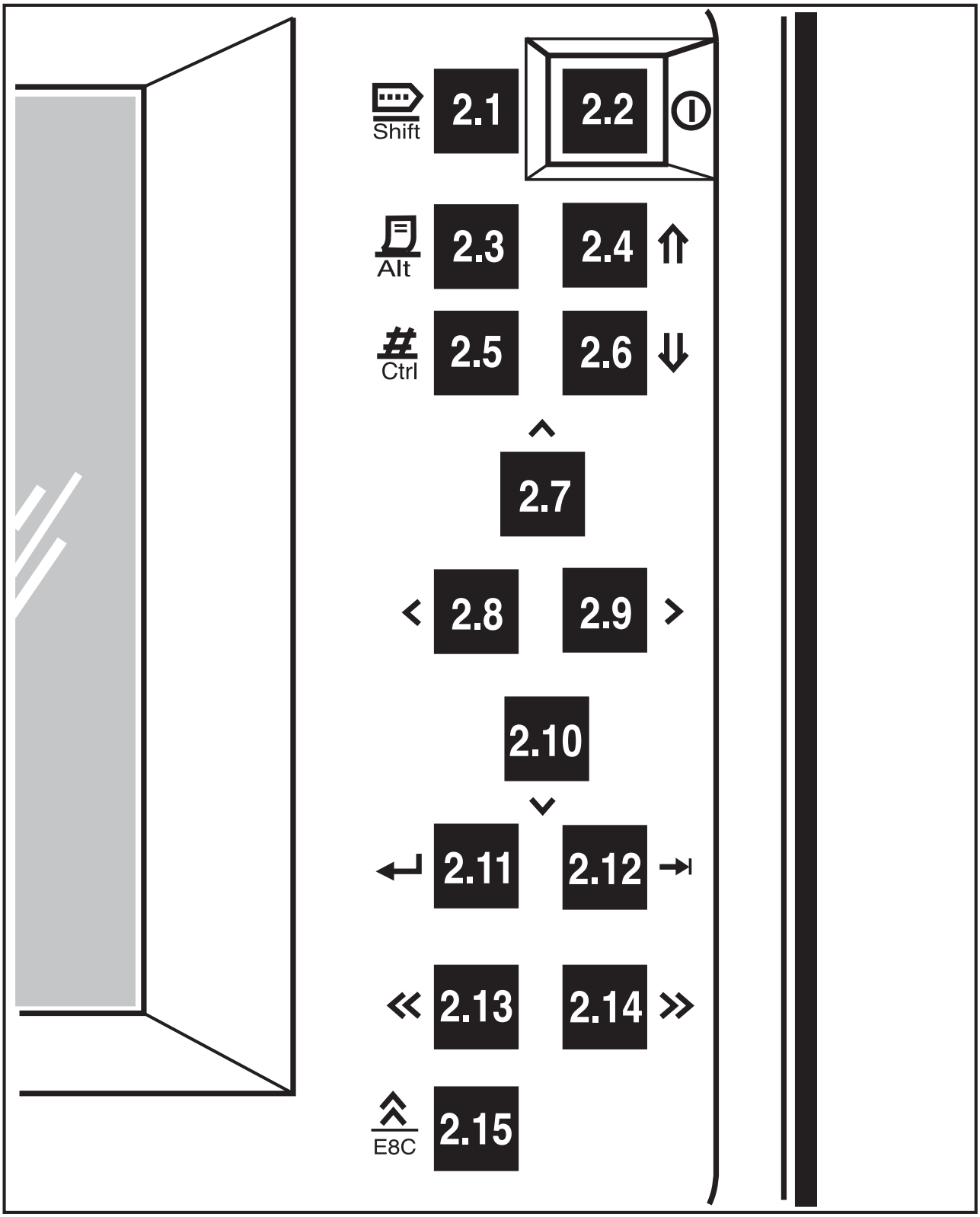
Shift
2.1
2.2
Alt
2.3
2.4
Ctrl
2.5
2.6
2.7
2.8
2.9
2.10
2.11
2.12
2.13
2.14
E8C
2.15

Connections

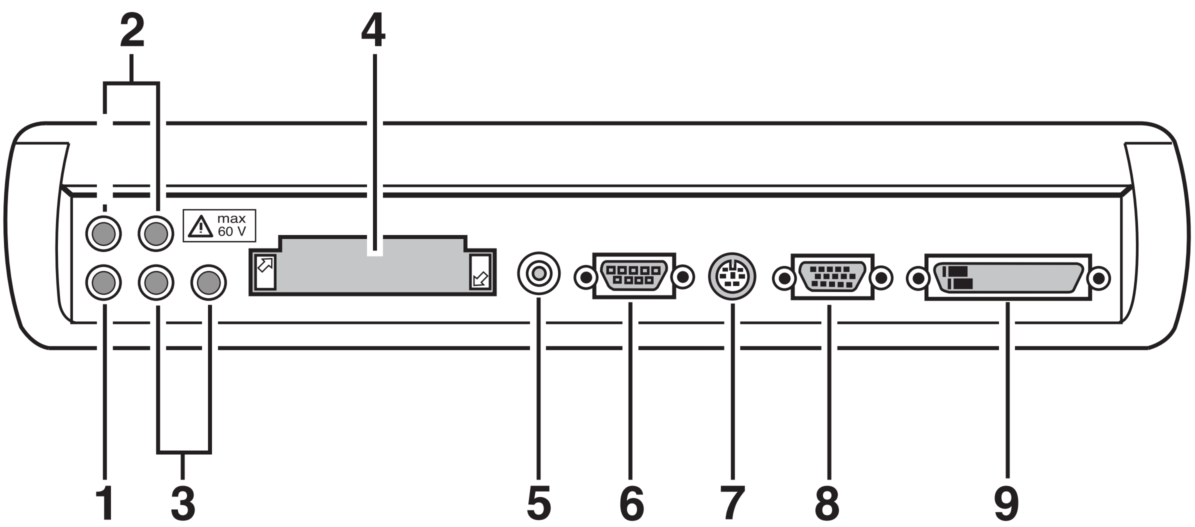

[illegible]

Diagnosis Card

[illegible]

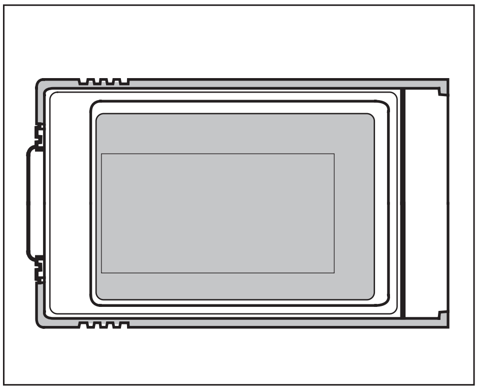

Voltage supply

[illegible]

- [illegible]
- [illegible]
- [illegible]

[illegible]

Adjusting illumination of LCD panel

[illegible] 2.5 [illegible] 2.4 [illegible] ⇒ [illegible]

[illegible] 2.5 [illegible] 2.6 [illegible] ⇒ [illegible]

Working log

[illegible] 2.3 [illegible]

Starting diagnosis

2.14

Software update

PSM 5.7

Introduction

PSM 5.7 (Porsche Stability Management)

911 Turbo (996) model year 2001

General instructions/safety instructions

The following points must be observed during vehicle diagnosis:

- In the case of some faults in the PSM system, the Tiptronic transmission may switch to limp-home because it is lacking several important data.
- In the case of a defective control unit, the entire hydraulic unit must be replaced.
- In the case of a defective pressure sensor, the entire hydraulic unit must be replaced.
- When replacing the hydraulic unit, the control unit must be coded and the steering-angle sensor must be calibrated.
- The steering-angle sensor must be calibrated for all work on the running gear.
- After troubleshooting or repairs, erase the fault memory with the Porsche System Tester II No. 9588 and carry out a test drive.
- After the test drive, read out the fault memory with the Porsche System Tester II No. 9588 again.

⚠ !

Danger of damage due to improper handling of batteries and control module plug connections!

- ***Disconnect the battery connection terminals only when the engine is switched off!***
- ***Start the engine only when the battery connection terminals are properly connected!***
- ***Pull off or push on plug connections for the control units or other electronic components only when the ignition is switched off!***
- ***Disconnect the negative terminal of the battery before welding work on the vehicle!***

Communication between control module and Porsche System Tester II No. 9588

The following conditions must be met in order to establish communication between the vehicle electrical system control module and the Porsche System Tester II No. 9588:

- Porsche System Tester II No. 9588 connected to data link connector
- Ignition on
- Battery positive voltage > 11 V

General information on the fault memory

- The fault memory of the control unit can save up to three different faults simultaneously
- If all three fault memories are occupied, the new fault overwrites the oldest fault
- The contents of the fault memory are retained even when the unit is removed
- It is possible to delete faults in the control unit only after an "ignition reset (off - on)" procedure

Diagnostic conditions

The fault can only be identified if the requirements listed under Diagnostic conditions are met. For this reason, the specified procedure must be observed after a fault is repaired:

1. Erase fault memory
2. Satisfy the requirements listed under 'Diagnostic conditions'
3. Read out fault memory again

Possible causes of fault

The possible fault causes that may be responsible for the fault are listed here. Please note that in certain circumstances further faults can be stored in the fault memory after troubleshooting (e.g. if plugs are disconnected). After carrying out repairs, read out the fault memory of all control modules and erase any faults.

Diagnosis/troubleshooting

The fault memory Info key F8 on the Porsche System Tester II No. 9588 can be used to access the extended fault memory. This information should be saved using the F4 key and printed out.

The following information can be displayed:

Fault type

The following fault types are possible:

- — (No details available)
- Short circuit to B+
- Short circuit to ground
- Signal implausible
- No signal change
- Open circuit/short circuit to B+
- Open circuit/short circuit to ground
- Open circuit
- Below limit value
- Above limit value

Fault status

The following status types are possible:

- Present – at the time of the previous control-unit routine (see diagnostic conditions)
- Not present – at the time of the previous control-unit routine (see diagnostic conditions)

Tools

!

Danger of injury when driving and working on the vehicle!

- ***Never hang the Porsche System Tester II No. 9588 over the steering wheel!***
- ***Always place tools and special tools outside the functioning range of all airbags!***

!

Plug contacts are optimally designed to suit the plug system. Operations on pins can cause contact problems. Always use suitable measurement tools, adapter plugs and test cables.

Porsche System Tester II No. 9588 ►

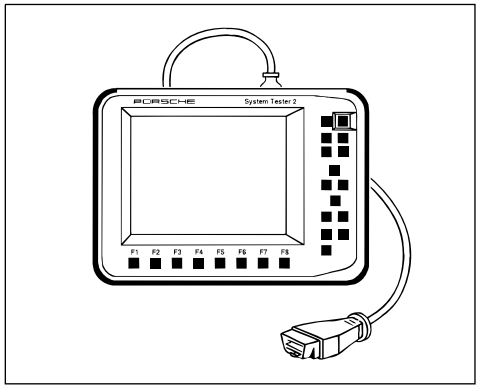

Commercially available digital multimeter ►

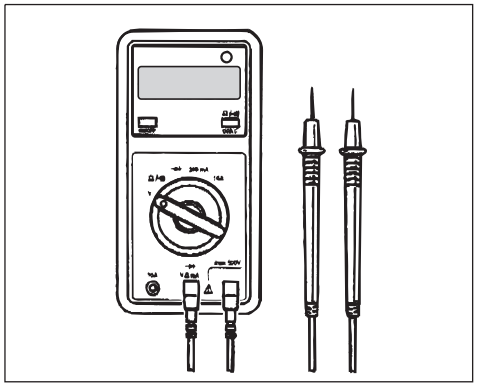

Measurement tool set No. 9684

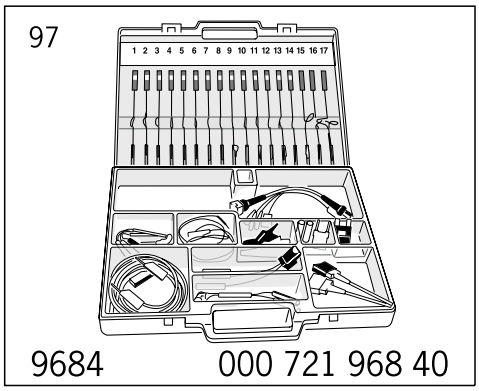

Component arrangement

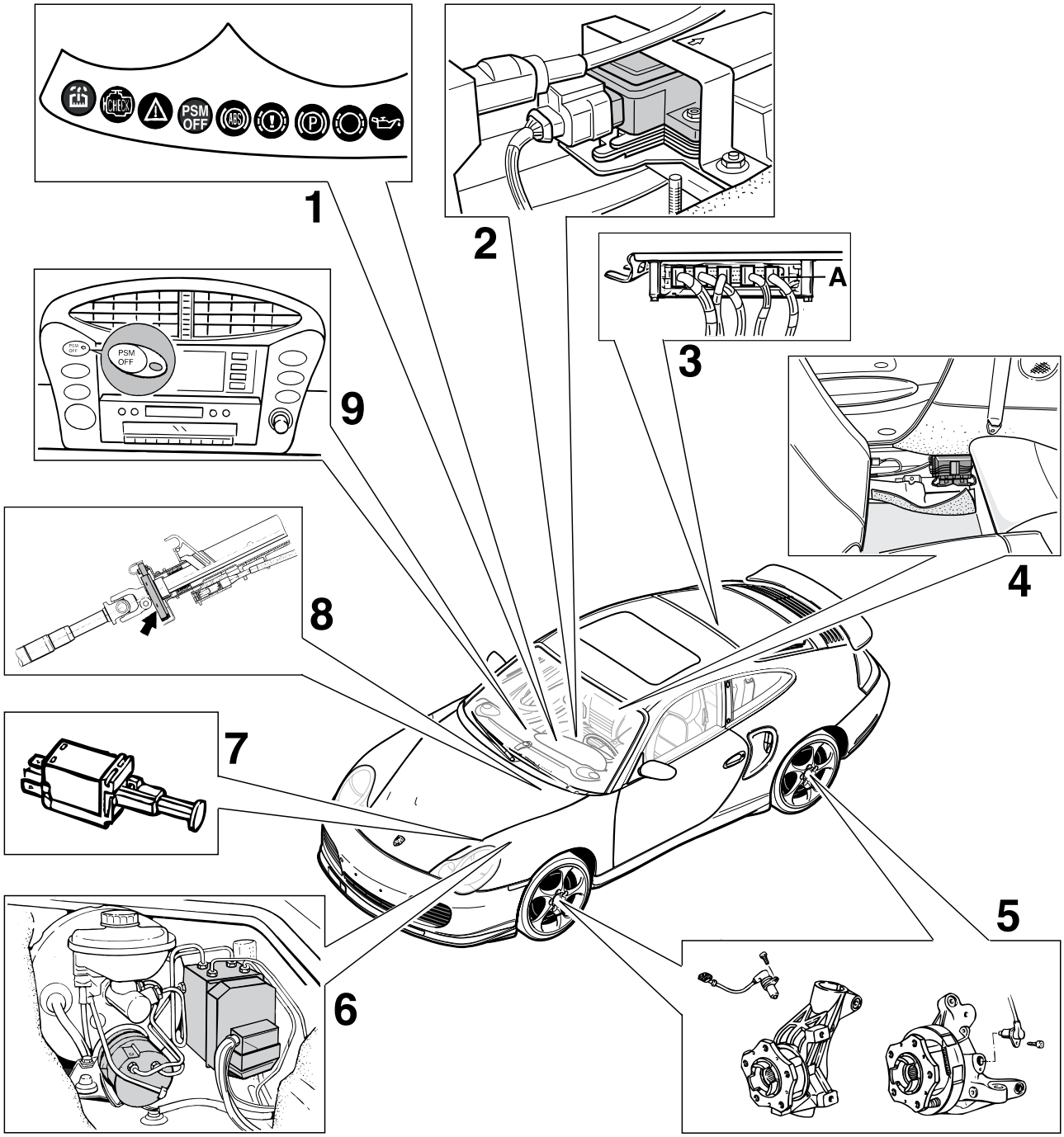

1 - Information and warning light

Note!

The information and warning lights in the instrument cluster are controlled via the CAN bus.

2 - Rate-of-turn sensor with integrated transverse acceleration sensor

3 - DME control module

4 - Tiptronic control module

5 - Speed sensors

6 - Brake system

7 - Stop light switch

8 - Steering angle sensor

9 - PSM OFF switch

Connector assignment

PSM control module wiring harness plug

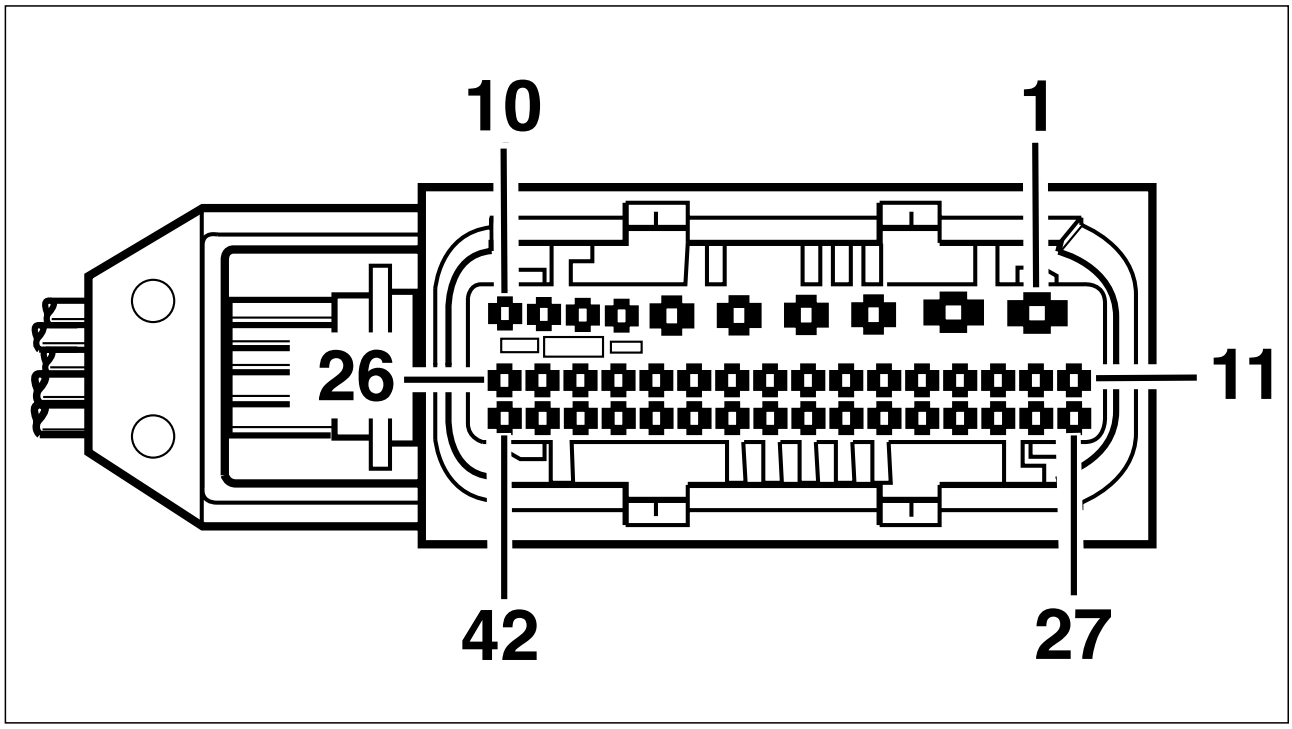

Pin	Designation
1	Ground for booster pump relay Ground for return pump
2	Voltage for solenoid valve relay Voltage for return pump relay
3	Voltage for booster pump
4	Ground for booster pump
5	Ground for PSM control module and rate-of-turn sensor
6	Voltage - terminal 30 valve relay
8	Transverse acceleration sensor signal wire
9	Rate-of-turn sensor (test signal)
10	Rate-of-turn sensor (reference signal)
11	Diagnosis communication wire
12	Front left speed sensor (signal wire)
14	Rear left speed sensor (signal wire)
15	Front right speed sensor (ground)
16	Front right speed sensor (signal wire)

Pin	Designation
18	PSM button
19	Rear right speed sensor output (signal wire)
20	PSM on (from PSM button)
21	Rate-of-turn and steering-angle sensor (ground)
22	Battery charge terminal 61
23	Power supply terminal 15
24	CAN bus (high)
25	Pressure sensor (ground)
26	Pressure sensor (signal wire)
27	PSM off (from PSM button)
28	Front left speed sensor (ground)
29	Rear left speed sensor (ground)
30	Rear right speed sensor (ground)
31	Rear right speed sensor (signal wire)
32	Stop light switch (close)
34	Rear left speed sensor output (signal wire)
36	Brake fluid level switch
37	Stop light switch (open)
38	Parking brake switch (ground)
39	Rate-of-turn and steering-angle sensor (voltage)
40	CAN bus (low)
41	Rate-of-turn sensor (signal wire)
42	Pressure sensor (voltage)

Control module function

Control module replacement

Caution!

Moisture can cause corrosion! Fluids must not come into contact with the connector!

If the control module is damaged, the complete hydraulic unit with integrated control module must be replaced. Observe the following points:

- The control module must be coded for the corresponding type of transmission (manual transmission/Tiptronic).
- The Vehicle Identification Number must be entered.
- A static test and the swap test must be carried out with the PST2.

Note!

Observe the allocation to the rate-of-turn sensor! The control module with part No. 996.618.149.02 performs a self-test of the rate-of-turn sensor. This control module must be installed only in combination with the rate-of-turn sensor with part No. 996.606.145.00. The allocation is listed in the table below.

PSM control module/ hydraulic unit	Rate-of-turn sensor
996.618.149.01/ 996.355.955.51	996.606.147.00 or 996.606.145.00
996.618.149.02/ 996.355.955.57	996.606.145.00

Rate-of-turn sensor

Caution!

The rate-of-turn sensor is a micro-mechanical component and is very sensitive to impacts!

Rate-of-turn sensor with part No. 996.606.147.00

If the rate-of-turn sensor with part No. 996.606.147.00 is determined to be faulty, install the new rate-of-turn sensor with part No. 996.606.145.00.

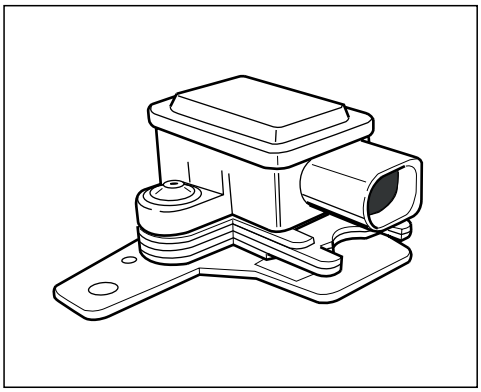

Rate-of-turn sensor with part No. 996.606.145.00

The new rate-of-turn sensor can be retrofitted; the front centre console holder and the lower front centre console support must be replaced for this purpose. An adapter plug is installed between the rate-of-turn sensor and the existing plug.

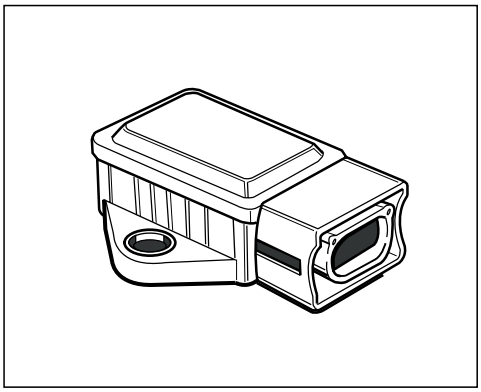

Rate-of-turn sensor - overview

The table below provides an overview of the component changes for the rate-of-turn sensor.

Model	911 Turbo (996)	
Use	to 07/00	as of 08/00
Control module	996.618.149.01	996.618.149.02
Hydraulic unit	996.355.955.51	996.355.955.57
Rate-of-turn sensor	996.606.147.00	996.606.145.00
Front centre console holder	996.552.309.06	996.552.309.08
Lower front centre console support	996.552.267.04	996.552.267.05
Bow	996.606.143.00	omitted
Cable guide	996.610.224.00	omitted

Conversion of rate-of-turn sensor

Rate-of-turn sensor conversion is described in the Technical Manual ⇒ Rep. Gr. 455931.

Coding

Extract coding

The following items are displayed under this menu item:

Steer.-angle sensor calib. by:	xxxxxxx
Version coded by:	xxxxxxx

Note!

The workshop number from the diagnosis card is stored.

Veh. Ident. No.	xxxxxxxxxxxxxx
Transmission:	Manual transmission/Tiptronic

Modify coding

Follow the instructions of the diagnostic tester.

The Tester displays the current coding as follows:

Veh. Ident. No.	xxxxxxxxxxxxxx
Transmission:	Manual transmission/Tiptronic

Work instruction		Tester display
1	♦ Switch on ignition ♦ Engine off ♦ Select "Modify coding" from the function selection. ♦ Follow the instructions of the diagnostic tester.	Veh. Ident. No. Transmission:
2	♦ Select Veh. Ident. No. or transmission and confirm with the Coding (F8) key ♦ Ignition off ♦ Ignition on (coding is adopted)	Veh. Ident. No. Transmission:

Static test

This test involves carrying out the valve and pump motor test. The test is normally not started until the vehicle moves off. The valve and pump motor test includes actuating all ABS valves and the

pump motor and checking their feedback. It only makes sense to carry out the "Static test" function if no fault has previously been detected as present, i.e. the system has not switched off.

Note!

This test must be carried out after the hydraulic unit has been exchanged.

Swap test

The swap test is used to check the allocation of the brake pressure lines to the wheel brake cylinders. A hydraulic and an electrical test are carried out.

Note!

This test must be carried out after the hydraulic unit has been exchanged.

Bleeding

The brake system can be bled using this menu item.
⇒ Rep. Gr. 470107; Bleeding brakes

Steering-angle sensor calibration

The steering-angle sensor can be calibrated with this menu item. The steering-angle sensor must be calibrated after work has been carried out on the running gear in the area of the front axle. The security code is required for calibration of the steering-angle sensor. The security code is contained under menu item "Actual values".⇒ Rep. Gr. 4560; Steering-angle sensor calibration

Fault overview

Fault code	Fault text	Fault effect
4200	Speed sensor lead, front right	♦ The PSM function is switched off ♦ The ABS function is switched off ♦ The EBD function is switched off ♦ The ASR function is switched off
4201	Speed sensor, front right	♦ The PSM function is switched off ♦ The ABS function is switched off ♦ The EBD function is switched off ♦ The ASR function is switched off
4205	Speed sensor lead, front left	♦ The PSM function is switched off ♦ The ABS function is switched off ♦ The EBD function is switched off ♦ The ASR function is switched off
4206	Speed sensor, front left	♦ The PSM function is switched off ♦ The ABS function is switched off ♦ The EBD function is switched off ♦ The ASR function is switched off
4210	Speed sensor lead, rear right	♦ The PSM function is switched off ♦ The ABS function is switched off ♦ The EBD function is switched off ♦ The ASR function is switched off
4211	Speed sensor, rear right	♦ The PSM function is switched off ♦ The ABS function is switched off ♦ The EBD function is switched off ♦ The ASR function is switched off
4215	Speed sensor lead, rear left	♦ The PSM function is switched off ♦ The ABS function is switched off ♦ The EBD function is switched off ♦ The ASR function is switched off
4216	Speed sensor, rear left	♦ The PSM function is switched off ♦ The ABS function is switched off ♦ The EBD function is switched off ♦ The ASR function is switched off
4226	Hydraulic power unit faulty	♦ The PSM function is switched off ♦ The ABS function is switched off ♦ The EBD function is switched off ♦ The ASR function is switched off

Fault code	Fault text	Fault effect
4231	Hydraulic power unit faulty	♦ The PSM function is switched off ♦ The ABS function is switched off ♦ The EBD function is switched off ♦ The ASR function is switched off
4236	Hydraulic power unit faulty	♦ The PSM function is switched off ♦ The ABS function is switched off ♦ The EBD function is switched off ♦ The ASR function is switched off
4241	Hydraulic power unit faulty	♦ The PSM function is switched off ♦ The ABS function is switched off ♦ The EBD function is switched off ♦ The ASR function is switched off
4246	Hydraulic power unit faulty	♦ The PSM function is switched off ♦ The ABS function is switched off ♦ The EBD function is switched off ♦ The ASR function is switched off
4251	Hydraulic power unit faulty	♦ The PSM function is switched off ♦ The ABS function is switched off ♦ The EBD function is switched off ♦ The ASR function is switched off
4256	Hydraulic power unit faulty	♦ The PSM function is switched off ♦ The ABS function is switched off ♦ The EBD function is switched off ♦ The ASR function is switched off
4261	Hydraulic power unit faulty	♦ The PSM function is switched off ♦ The ABS function is switched off ♦ The EBD function is switched off ♦ The ASR function is switched off
4266	Return pump fault	♦ The PSM function is switched off ♦ The ABS function is switched off ♦ The EBD function is switched off ♦ The ASR function is switched off
4276	Valve relay	♦ The PSM function is switched off ♦ The ABS function is switched off ♦ The EBD function is switched off ♦ The ASR function is switched off
4281	Brake fluid level	♦ The PSM function is switched off ♦ The ASR function is switched off

Fault code	Fault text	Fault effect
4340	Stop light switch	♦ The PSM function is switched off ♦ The ABS function is switched off ♦ The EBD function is switched off ♦ The ASR function is switched off
4400	Transverse acceleration sensor	♦ The PSM function is switched off ♦ The ABS function is switched off ♦ The EBD function is switched off ♦ The ASR function is switched off
4420	Rate-of-turn sensor	♦ The PSM function is switched off ♦ The ABS function is switched off ♦ The EBD function is switched off ♦ The ASR function is switched off
4440	Steering-angle sensor	♦ The PSM function is switched off ♦ The ABS function is switched off ♦ The EBD function is switched off ♦ The ASR function is switched off
4460	Pressure sensor	♦ The PSM function is switched off ♦ The ABS function is switched off ♦ The EBD function is switched off ♦ The ASR function is switched off
4480	Booster pump	♦ The PSM function is switched off ♦ The ASR function is switched off
4607	Control unit faulty	♦ The PSM function is switched off ♦ The ABS function is switched off ♦ The EBD function is switched off ♦ The ASR function is switched off
4802	Undervoltage	♦ The PSM function is switched off ♦ The ABS function is switched off ♦ The EBD function is switched off ♦ The ASR function is switched off
5024	CAN message missing from Tiptronic	♦ Error correction ♦ Diagnostic entry
5260	Booster valve 1	♦ The PSM function is switched off ♦ The ABS function is switched off ♦ The EBD function is switched off ♦ The ASR function is switched off

Fault code	Fault text	Fault effect
5262	Booster valve 2	♦ The PSM function is switched off ♦ The ABS function is switched off ♦ The EBD function is switched off ♦ The ASR function is switched off
5265	Switch-over valve 1	♦ The PSM function is switched off ♦ The ABS function is switched off ♦ The EBD function is switched off ♦ The ASR function is switched off
5267	Switch-over valve 2	♦ The PSM function is switched off ♦ The ABS function is switched off ♦ The EBD function is switched off ♦ The ASR function is switched off
5281	Version coding error	♦ The PSM function is switched off ♦ The ABS function is switched off ♦ The EBD function is switched off ♦ The ASR function is switched off
5500	Wheel speed monitoring	♦ The PSM function is switched off ♦ The ABS function is switched off ♦ The EBD function is switched off ♦ The ASR function is switched off
5504	Extraordinary operating condition	♦ The PSM function is switched off ♦ The ABS function is switched off ♦ The EBD function is switched off ♦ The ASR function is switched off
5505	Electrical system (steering-angle sensor)	♦ The PSM function is switched off ♦ The ABS function is switched off ♦ The EBD function is switched off ♦ The ASR function is switched off
5506	Electrical system (rate-of-turn sensor)	♦ The PSM function is switched off ♦ The ABS function is switched off ♦ The EBD function is switched off ♦ The ASR function is switched off
5520	CAN data bus (drive)	♦ The PSM function is switched off ♦ The ABS function is switched off ♦ The EBD function is switched off ♦ The ASR function is switched off

Fault code	Fault text	Fault effect
5521	Faulty data exchange	♦ The PSM function is switched off ♦ The ABS function is switched off ♦ The EBD function is switched off ♦ The ASR function is switched off
5522	DME: CAN message missing	♦ The PSM function is switched off ♦ The ABS function is switched off ♦ The EBD function is switched off ♦ The ASR function is switched off
5523	DME: CAN message missing	♦ The PSM function is switched off ♦ The ABS function is switched off ♦ The EBD function is switched off ♦ The ASR function is switched off
5524	DME: incorrect CAN rpm signal	♦ The PSM function is switched off ♦ The ABS function is switched off ♦ The EBD function is switched off ♦ The ASR function is switched off
5525	Torque transmission from the DME disturbed at times	♦ The PSM function is switched off ♦ The ABS function is switched off ♦ The EBD function is switched off ♦ The ASR function is switched off
5526	DME: incorrect accelerator-pedal value	♦ The PSM function is switched off ♦ The ABS function is switched off ♦ The EBD function is switched off ♦ The ASR function is switched off
5527	Transfer via CAN not possible	♦ The PSM function is switched off ♦ The ABS function is switched off ♦ The EBD function is switched off ♦ The ASR function is switched off
5528	DME: non-conforming software version	♦ The PSM function is switched off ♦ The ABS function is switched off ♦ The EBD function is switched off ♦ The ASR function is switched off
5529	Error in CAN message from Tiptronic	♦ Error correction ♦ Diagnostic entry
5540	DME: fault stored in ECM	♦ The PSM function is switched off ♦ The ABS function is switched off ♦ The EBD function is switched off ♦ The ASR function is switched off

Fault code 4200

Speed sensor lead, front right

Diagnostic conditions

- Ignition on

Possible cause of fault

- Short circuit to B+ / ground or open circuit between control unit and speed sensor
- Speed sensor faulty
- Control unit faulty

Affected pins

Pin 15 and pin 16

Diagnosis/troubleshooting

Work instruction			**Display OK**	**If not OK**
1	Visual inspection	♦ Examine speed sensor and wire at the front right for external damage. ♦ Check speed sensor plug for corrosion.	⇒ Step 2	♦ Repair speed sensor and lead. ♦ Repair speed sensor plug. → End
2	Checking speed sensors	♦ Ignition off. ♦ Disconnect plug from speed sensor. ♦ Measure resistance between pin 1 and pin 2 on speed sensor.	1 kΩ to 3 kΩ ⇒ Step 3	> 3 kΩ or < 1 kΩ ⇒ Step 9
3	Checking function of speed sensor	♦ Ignition off. ♦ Set AC measuring range on the multimeter. ♦ Jack the vehicle up and turn the front right wheel by hand. ♦ Measure voltage between pin 4 and pin 5 of speed sensor.	Measureable AC voltage, approx. same level as to speed sensor of an opposite wheel at same wheel speed. ⇒ Step 5	No AC voltage measureable. ⇒ Step 5
4	Mechanical function	♦ Check speed sensor and toothed ring at the front right for soiling and damage.	⇒ Step 9	Clean toothed ring and replace, if necessary. → End

Work instruction			Display OK	If not OK
5	Checking leads of speed sensor for short circuit to B+	♦ Ignition off. ♦ Pull plug off the PSM control unit. ♦ Ignition on. ♦ Measure voltage between PSM control unit plug pin 15 and ground. ♦ Measure voltage between PSM control unit plug pin 16 and ground.	< 0.3 V ⇒ Step 6	Short circuit to B+ between PSM control unit plug pin 15 or pin 16 and speed sensor pin 4 or pin 5. Repair wiring harness. → End
6	Checking leads of speed sensor for short circuit to ground	♦ Ignition off. ♦ Measure resistance between PSM control unit plug pin 15 and ground. ♦ Measure resistance between PSM control unit plug pin 16 and ground.	∞ Ω ⇒ Step 7	Short circuit to ground between PSM control unit plug pin 15 or pin 16 and speed sensor pin 4 or pin 5. Repair wiring harness. → End
7	Checking leads of speed sensor for open circuit	♦ Ignition off. ♦ Measure resistance between PSM control unit plug pin 15 and pin 4 on speed sensor. ♦ Measure resistance between PSM control unit plug pin 16 and pin 5 on speed sensor.	0 Ω ⇒ Step 8	Open circuit in leads of speed sensor. Repair wiring harness. → End
8	Checking leads of speed sensor for short circuit with respect to each other	♦ Ignition off. ♦ Measure resistance between PSM control unit plug pin 15 and pin 16.	∞ Ω ⇒ Step 10	Short circuit in leads of speed sensor with respect to each other. Repair wiring harness. → End
9	♦ Replacing front right speed sensor		→ End	
10	♦ Replacing PSM control unit		→ End	

Fault code 4201

Speed sensor, front right

Implausible signal from speed sensor

Diagnostic conditions

- Vehicle speed > 40 $^{km}/_{h}$ (25 mph) for min. 40 s.

Possible cause of fault

- Toothed ring/speed sensor soiled or damaged, wheel-bearing play too great
- Pick-up due to faulty shield
- Speed sensor faulty
- Control unit faulty

Affected pins

Pin 15 and pin 16

Diagnosis/troubleshooting

Work instruction			**Display OK**	**If not OK**
1	Visual inspection	♦ Examine speed sensor and wire at the front right for external damage. ♦ Check speed sensor plug for corrosion.	⇒ Step 2	♦ Repair speed sensor and lead. ♦ Repair speed sensor plug. → End
2	Checking speed sensors	♦ Ignition off. ♦ Disconnect plug from speed sensor. ♦ Measure resistance between pin 1 and pin 2 on speed sensor.	1 kΩ to 3 kΩ ⇒ Step 3	> 3 kΩ or < 1 kΩ ⇒ Step 9
3	Checking function of speed sensor	♦ Ignition off. ♦ Set AC measuring range on the multimeter. ♦ Jack the vehicle up and turn the front right wheel by hand. ♦ Measure voltage between pin 4 and pin 5 of speed sensor.	Measureable AC voltage, approx. same level as to speed sensor of an opposite wheel at same wheel speed. ⇒ Step 5	No AC voltage measureable. ⇒ Step 5

Work instruction			Display OK	If not OK
4	Mechanical function	♦ Check speed sensor and toothed ring at the front right for soiling and damage.	⇒ Step 9	Clean toothed ring and replace, if necessary. → End
5	Checking leads of speed sensor for short circuit to B+	♦ Ignition off. ♦ Pull plug off the PSM control unit. ♦ Ignition on. ♦ Measure voltage between PSM control unit plug pin 15 and ground. ♦ Measure voltage between PSM control unit plug pin 16 and ground.	< 0.3 V ⇒ Step 6	Short circuit to B+ between PSM control unit plug pin 15 or pin 16 and speed sensor pin 4 or pin 5. Repair wiring harness. → End
6	Checking leads of speed sensor for short circuit to ground	♦ Ignition off. ♦ Measure resistance between PSM control unit plug pin 15 and ground. ♦ Measure resistance between PSM control unit plug pin 16 and ground.	∞ Ω ⇒ Step 7	Short circuit to ground between PSM control unit plug pin 15 or pin 16 and speed sensor pin 4 or pin 5. Repair wiring harness. → End
7	Checking leads of speed sensor for open circuit	♦ Ignition off. ♦ Measure resistance between PSM control unit plug pin 15 and pin 4 on speed sensor. ♦ Measure resistance between PSM control unit plug pin 16 and pin 5 on speed sensor.	0 Ω ⇒ Step 8	Open circuit in leads of speed sensor. Repair wiring harness. → End
8	Checking leads of speed sensor for short circuit with respect to each other	♦ Ignition off. ♦ Measure resistance between PSM control unit plug pin 15 and pin 16.	∞ Ω ⇒ Step 10	Short circuit in leads of speed sensor with respect to each other. Repair wiring harness. → End
9	♦ Replacing front right speed sensor		→ End	
10	♦ Replacing PSM control unit		→ End	

Fault code 4205

Speed sensor lead, front left

Diagnostic conditions

- Ignition on

Possible cause of fault

- Short circuit to B+ / ground or open circuit between control unit and speed sensor
- Speed sensor faulty
- Control unit faulty

Affected pins

Pin 12 and pin 28

Diagnosis/troubleshooting

Work instruction			**Display OK**	**If not OK**
1	Visual inspection	♦ Examine speed sensor and lead at the front left for external damage. ♦ Check speed sensor plug for corrosion.	⇒ Step 2	♦ Repair speed sensor and lead. ♦ Repair speed sensor plug. → End
2	Checking speed sensors	♦ Ignition off. ♦ Disconnect plug from speed sensor. ♦ Measure resistance between pin 1 and pin 2 on speed sensor.	1 kΩ to 3 kΩ ⇒ Step 3	> 3 kΩ or < 1 kΩ ⇒ Step 9
3	Checking function of speed sensor	♦ Ignition off. ♦ Set AC measuring range on the multimeter. ♦ Jack the vehicle up and turn the front left wheel by hand. ♦ Measure voltage between pin 4 and pin 5 of speed sensor.	Measureable AC voltage, approx. same level as to speed sensor of an opposite wheel at same wheel speed. ⇒ Step 5	No AC voltage measureable. ⇒ Step 5
4	Mechanical function	♦ Check speed sensor and toothed ring at the front left for soiling and damage.	⇒ Step 9	Clean toothed ring and replace, if necessary. → End

Work instruction			Display OK	If not OK
5	Checking leads of speed sensor for short circuit to B+	♦ Ignition off. ♦ Pull plug off the PSM control unit. ♦ Ignition on. ♦ Measure voltage between PSM control module plug pin 12 and ground. ♦ Measure voltage between PSM control module plug pin 28 and ground.	< 0.3 V ⇒ Step 6	Short circuit to B+ between PSM control unit plug pin 12 or pin 28 and speed sensor pin 4 or pin 5. Repair wiring harness. → End
6	Checking leads of speed sensor for short circuit to ground	♦ Ignition off. ♦ Measure resistance between PSM control module plug pin 12 and ground. ♦ Measure resistance between PSM control module plug pin 28 and ground.	∞ Ω ⇒ Step 7	Short circuit to ground between PSM control unit plug pin 12 or pin 28 and speed sensor pin 4 or pin 5. Repair wiring harness. → End
7	Checking leads of speed sensor for open circuit	♦ Ignition off. ♦ Measure resistance between PSM control unit plug pin 12 and pin 4 on speed sensor. ♦ Measure resistance between PSM control unit plug pin 28 and pin 5 on speed sensor.	0 Ω ⇒ Step 8	Open circuit in leads of speed sensor. Repair wiring harness. → End
8	Checking leads of speed sensor for short circuit with respect to each other	♦ Ignition off. ♦ Measure resistance between PSM control unit plug pin 12 and pin 28.	∞ Ω ⇒ Step 10	Short circuit in leads of speed sensor with respect to each other. Repair wiring harness. → End
9	♦ Replacing front left speed sensor		→ End	
10	♦ Replacing PSM control unit		→ End	

Fault code 4206

Speed sensor, front left

Incorrect signal from speed sensor

Diagnostic conditions

- Vehicle speed > 40 $^{km}/_{h}$ (25 mph) for min. 40 s.

Possible cause of fault

- Toothed ring/speed sensor soiled or damaged, wheel-bearing play too great
- Pick-up due to faulty shield
- Speed sensor faulty
- Control unit faulty

Affected pins

Pin 12 and pin 28

Diagnosis/troubleshooting

Work instruction			**Display OK**	**If not OK**
1	Visual inspection	♦ Examine speed sensor and lead at the front left for external damage. ♦ Check speed sensor plug for corrosion.	⇒ Step 2	♦ Repair speed sensor and lead. ♦ Repair speed sensor plug. → End
2	Checking speed sensors	♦ Ignition off. ♦ Disconnect plug from speed sensor. ♦ Measure resistance between pin 1 and pin 2 on speed sensor.	1 kΩ to 3 kΩ ⇒ Step 3	> 3 kΩ or < 1 kΩ ⇒ Step 9
3	Checking function of speed sensor	♦ Ignition off. ♦ Set AC measuring range on the multimeter. ♦ Jack the vehicle up and turn the front left wheel by hand. ♦ Measure voltage between pin 4 and pin 5 of speed sensor.	Measureable AC voltage, approx. same level as to speed sensor of an opposite wheel at same wheel speed. ⇒ Step 5	No AC voltage measureable. ⇒ Step 5

Work instruction			Display OK	If not OK
4	Mechanical function	♦ Check speed sensor and toothed ring at the front left for soiling and damage.	⇒ Step 9	Clean toothed ring and replace, if necessary. → End
5	Checking leads of speed sensor for short circuit to B+	♦ Ignition off. ♦ Pull plug off the PSM control unit. ♦ Ignition on. ♦ Measure voltage between PSM control module plug pin 12 and ground. ♦ Measure voltage between PSM control module plug pin 28 and ground.	< 0.3 V ⇒ Step 6	Short circuit to B+ between PSM control unit plug pin 12 or pin 28 and speed sensor pin 4 or pin 5. Repair wiring harness. → End
6	Checking leads of speed sensor for short circuit to ground	♦ Ignition off. ♦ Measure resistance between PSM control module plug pin 12 and ground. ♦ Measure resistance between PSM control module plug pin 28 and ground.	∞ Ω ⇒ Step 7	Short circuit to ground between PSM control unit plug pin 12 or pin 28 and speed sensor pin 4 or pin 5. Repair wiring harness. → End
7	Checking leads of speed sensor for open circuit	♦ Ignition off. ♦ Measure resistance between PSM control unit plug pin 12 and pin 4 on speed sensor. ♦ Measure resistance between PSM control unit plug pin 28 and pin 5 on speed sensor.	0 Ω ⇒ Step 8	Open circuit in leads of speed sensor. Repair wiring harness. → End
8	Checking leads of speed sensor for short circuit with respect to each other	♦ Ignition off. ♦ Measure resistance between PSM control unit plug pin 12 and pin 28.	∞ Ω ⇒ Step 10	Short circuit in leads of speed sensor with respect to each other. Repair wiring harness. → End
9	♦ Replacing front left speed sensor		→ End	
10	♦ Replacing PSM control unit		→ End	

Fault code 4210

Speed sensor lead, rear right

Diagnostic conditions

- Ignition on

Possible cause of fault

- Short circuit to B+ / ground or open circuit between control unit and speed sensor
- Speed sensor faulty
- Control unit faulty

Affected pins

Pin 30 and pin 31

Diagnosis/troubleshooting

Work instruction			**Display OK**	**If not OK**
1	Visual inspection	♦ Examine speed sensor and lead at the rear right for external damage. ♦ Check speed sensor plug for corrosion.	⇒ Step 2	♦ Repair speed sensor and lead. ♦ Repair speed sensor plug. → End
2	Checking speed sensors	♦ Ignition off. ♦ Disconnect plug from speed sensor. ♦ Measure resistance between pin 1 and pin 2 on speed sensor.	1 kΩ to 3 kΩ ⇒ Step 3	> 3 kΩ or < 1 kΩ ⇒ Step 9
3	Checking function of speed sensor	♦ Ignition off. ♦ Set AC measuring range on the multimeter. ♦ Jack the vehicle up and turn the rear right wheel by hand. ♦ Measure voltage between pin 4 and pin 5 of speed sensor.	Measureable AC voltage, approx. same level as to speed sensor of an opposite wheel at same wheel speed. ⇒ Step 5	No AC voltage measureable. ⇒ Step 5
4	Mechanical function	♦ Check speed sensor and toothed ring at the rear right for soiling and external damage.	⇒ Step 9	Clean toothed ring and replace, if necessary. → End

Work instruction			Display OK	If not OK
5	Checking leads of speed sensor for short circuit to B+	♦ Ignition off. ♦ Pull plug off the PSM control unit. ♦ Ignition on. ♦ Measure voltage between PSM control module plug pin 30 and ground. ♦ Measure voltage between PSM control module plug pin 31 and ground.	< 0.3 V ⇒ Step 6	Short circuit to B+ between PSM control unit plug pin 30 or pin 31 and speed sensor pin 4 or pin 5. Repair wiring harness. → End
6	Checking leads of speed sensor for short circuit to ground	♦ Ignition off. ♦ Measure resistance between PSM control module plug pin 30 and ground. ♦ Measure resistance between PSM control module connector pin 31 and ground.	∞ Ω ⇒ Step 7	Short circuit to ground between PSM control unit plug pin 30 or pin 31 and speed sensor pin 4 or pin 5. Repair wiring harness. → End
7	Checking leads of speed sensor for open circuit	♦ Ignition off. ♦ Measure resistance between PSM control unit plug pin 30 and pin 4 on speed sensor. ♦ Measure resistance between PSM control unit plug pin 31 and pin 5 on speed sensor.	0 Ω ⇒ Step 8	Open circuit in leads of speed sensor. Repair wiring harness. → End
8	Checking leads of speed sensor for short circuit with respect to each other	♦ Ignition off. ♦ Measure resistance between PSM control unit plug pin 30 and pin 31.	∞ Ω ⇒ Step 10	Short circuit in leads of speed sensor with respect to each other. Repair wiring harness. → End
9	♦ Replacing rear right speed sensor		→ End	
10	♦ Replacing PSM control unit		→ End	

Fault code 4211

Speed sensor, rear right

Incorrect signal from speed sensor

Diagnostic conditions

- Vehicle speed > 40 $^{km}/_{h}$ (25 mph) for min. 40 s.

Possible cause of fault

- Pulse ring/speed sensor soiled or damaged, wheel-bearing play too great
- Pick-up due to faulty shield
- Speed sensor faulty
- Control unit faulty

Affected pins

Pin 30 and pin 31

Diagnosis/troubleshooting

Work instruction			**Display OK**	**If not OK**
1	Visual inspection	♦ Examine speed sensor and lead at the rear right for external damage. ♦ Check speed sensor plug for corrosion.	⇒ Step 2	♦ Repair speed sensor and lead. ♦ Repair speed sensor plug. → End
2	Checking speed sensors	♦ Ignition off. ♦ Disconnect plug from speed sensor. ♦ Measure resistance between pin 1 and pin 2 on speed sensor.	1 kΩ to 3 kΩ ⇒ Step 3	> 3 kΩ or < 1 kΩ ⇒ Step 9
3	Checking function of speed sensor	♦ Ignition off. ♦ Set AC measuring range on the multimeter. ♦ Jack the vehicle up and turn the rear right wheel by hand. ♦ Measure voltage between pin 4 and pin 5 of speed sensor.	Measureable AC voltage, approx. same level as to speed sensor of an opposite wheel at same wheel speed. ⇒ Step 5	No AC voltage measureable. ⇒ Step 5

Work instruction			Display OK	If not OK
4	Mechanical function	♦ Check speed sensor and toothed ring at the rear right for soiling and external damage.	⇒ Step 9	Clean toothed ring and replace, if necessary. → End
5	Checking leads of speed sensor for short circuit to B+	♦ Ignition off. ♦ Pull plug off the PSM control unit. ♦ Ignition on. ♦ Measure voltage between PSM control module plug pin 30 and ground. ♦ Measure voltage between PSM control module plug pin 31 and ground.	< 0.3 V ⇒ Step 6	Short circuit to B+ between PSM control unit plug pin 30 or pin 31 and speed sensor pin 4 or pin 5. Repair wiring harness. → End
6	Checking leads of speed sensor for short circuit to ground	♦ Ignition off. ♦ Measure resistance between PSM control module plug pin 30 and ground. ♦ Measure resistance between PSM control module connector pin 31 and ground.	∞ Ω ⇒ Step 7	Short circuit to ground between PSM control unit plug pin 30 or pin 31 and speed sensor pin 4 or pin 5. Repair wiring harness. → End
7	Checking leads of speed sensor for open circuit	♦ Ignition off. ♦ Measure resistance between PSM control unit plug pin 30 and pin 4 on speed sensor. ♦ Measure resistance between PSM control unit plug pin 31 and pin 5 on speed sensor.	0 Ω ⇒ Step 8	Open circuit in leads of speed sensor. Repair wiring harness. → End
8	Checking leads of speed sensor for short circuit with respect to each other	♦ Ignition off. ♦ Measure resistance between PSM control unit plug pin 30 and pin 31.	∞ Ω ⇒ Step 10	Short circuit in leads of speed sensor with respect to each other. Repair wiring harness. → End
9	♦ Replacing rear right speed sensor		→ End	
10	♦ Replacing PSM control unit		→ End	

Fault code 4215

Speed sensor lead, rear left

Diagnostic conditions

- Ignition on

Possible cause of fault

- Short circuit to B+ / ground or open circuit between control unit and speed sensor
- Speed sensor faulty
- Control unit faulty

Affected pins

Pin 29 and pin 14

Diagnosis/troubleshooting

Work instruction			**Display OK**	**If not OK**
1	Visual inspection	♦ Examine speed sensor and lead at the rear left for external damage. ♦ Check speed sensor plug for corrosion.	⇒ Step 2	♦ Repair speed sensor and lead. ♦ Repair speed sensor plug. → End
2	Checking speed sensors	♦ Ignition off. ♦ Disconnect plug from speed sensor. ♦ Measure resistance between pin 1 and pin 2 on speed sensor.	1 kΩ to 3 kΩ ⇒ Step 3	> 3 kΩ or < 1 kΩ ⇒ Step 9
3	Checking function of speed sensor	♦ Ignition off. ♦ Set AC measuring range on the multimeter. ♦ Jack the vehicle up and turn the rear left wheel by hand. ♦ Measure voltage between pin 4 and pin 5 of speed sensor.	Measureable AC voltage, approx. same level as to speed sensor of an opposite wheel at same wheel speed. ⇒ Step 5	No AC voltage measureable. ⇒ Step 5
4	Mechanical function	♦ Check speed sensor and toothed ring at the rear left for soiling and external damage.	⇒ Step 9	Clean toothed ring and replace, if necessary. → End

Work instruction			Display OK	If not OK
5	Checking leads of speed sensor for short circuit to B+	♦ Ignition off. ♦ Pull plug off the PSM control unit. ♦ Ignition on. ♦ Measure voltage between PSM control module plug pin 29 and ground. ♦ Measure voltage between PSM control module plug pin 14 and ground.	< 0.3 V ⇒ Step 6	Short circuit to B+ between PSM control unit plug pin 29 or pin 14 and speed sensor pin 4 or pin 5. Repair wiring harness. → End
6	Checking leads of speed sensor for short circuit to ground	♦ Ignition off. ♦ Measure resistance between PSM control module plug pin 29 and ground. ♦ Measure resistance between PSM control module plug pin 14 and ground.	∞ Ω ⇒ Step 7	Short circuit to ground between PSM control unit plug pin 29 or pin 14 and speed sensor pin 4 or pin 5. Repair wiring harness. → End
7	Checking leads of speed sensor for open circuit	♦ Ignition off. ♦ Measure resistance between PSM control unit plug pin 29 and pin 4 on speed sensor. ♦ Measure resistance between PSM control unit plug pin 14 and pin 5 on speed sensor.	0 Ω ⇒ Step 8	Open circuit in leads of speed sensor. Repair wiring harness. → End
8	Checking leads of speed sensor for short circuit with respect to each other	♦ Ignition off. ♦ Measure resistance between PSM control unit plug pin 29 and pin 14.	∞ Ω ⇒ Step 10	Short circuit in leads of speed sensor with respect to each other. Repair wiring harness. → End
9	♦ Replacing rear left speed sensor		→ End	
10	♦ Replacing PSM control unit		→ End	

Fault code 4216

Speed sensor, rear left

Incorrect signal from speed sensor

Diagnostic conditions

- Vehicle speed > 40 $^{km}/_{h}$ (25 mph) for min. 40 s.

Possible cause of fault

- Pulse ring/speed sensor soiled or damaged, wheel-bearing play too great
- Pick-up due to faulty shield
- Speed sensor faulty
- Control unit faulty

Affected pins

Pin 29 and pin 14

Diagnosis/troubleshooting

Work instruction			**Display OK**	**If not OK**
1	Visual inspection	♦ Examine speed sensor and lead at the rear left for external damage. ♦ Check speed sensor plug for corrosion.	⇒ Step 2	♦ Repair speed sensor and lead. ♦ Repair speed sensor plug. → End
2	Checking speed sensors	♦ Ignition off. ♦ Disconnect plug from speed sensor. ♦ Measure resistance between pin 1 and pin 2 on speed sensor.	1 kΩ to 3 kΩ ⇒ Step 3	> 3 kΩ or < 1 kΩ ⇒ Step 9
3	Checking function of speed sensor	♦ Ignition off. ♦ Set AC measuring range on the multimeter. ♦ Jack the vehicle up and turn the rear left wheel by hand. ♦ Measure voltage between pin 4 and pin 5 of speed sensor.	Measureable AC voltage, approx. same level as to speed sensor of an opposite wheel at same wheel speed. ⇒ Step 5	No AC voltage measureable. ⇒ Step 5

Work instruction			Display OK	If not OK
4	Mechanical function	♦ Check speed sensor and toothed ring at the rear left for soiling and external damage.	⇒ Step 9	Clean toothed ring and replace, if necessary. → End
5	Checking leads of speed sensor for short circuit to B+	♦ Ignition off. ♦ Pull plug off the PSM control unit. ♦ Ignition on. ♦ Measure voltage between PSM control module plug pin 29 and ground. ♦ Measure voltage between PSM control module plug pin 14 and ground.	< 0.3 V ⇒ Step 6	Short circuit to B+ between PSM control unit plug pin 29 or pin 14 and speed sensor pin 4 or pin 5. Repair wiring harness. → End
6	Checking leads of speed sensor for short circuit to ground	♦ Ignition off. ♦ Measure resistance between PSM control module plug pin 29 and ground. ♦ Measure resistance between PSM control module plug pin 14 and ground.	∞ Ω ⇒ Step 7	Short circuit to ground between PSM control unit plug pin 29 or pin 14 and speed sensor pin 4 or pin 5. Repair wiring harness. → End
7	Checking leads of speed sensor for open circuit	♦ Ignition off. ♦ Measure resistance between PSM control unit plug pin 29 and pin 4 on speed sensor. ♦ Measure resistance between PSM control unit plug pin 14 and pin 5 on speed sensor.	0 Ω ⇒ Step 8	Open circuit in leads of speed sensor. Repair wiring harness. → End
8	Checking leads of speed sensor for short circuit with respect to each other	♦ Ignition off. ♦ Measure resistance between PSM control unit plug pin 29 and pin 14.	∞ Ω ⇒ Step 10	Short circuit in leads of speed sensor with respect to each other. Repair wiring harness. → End
9	♦ Replacing rear left speed sensor		→ End	
10	♦ Replacing PSM control unit		→ End	

Fault code 4226

Hydraulic power unit faulty

Diagnostic conditions

- Ignition switched on
- Front right outlet valve voltage actual value is evaluated internally and shows implausible value (valve circuit or driver output malfunction)

Possible cause of fault

- PSM hydraulic unit faulty

Affected terminals

-

Diagnosis/troubleshooting

Work instruction		Display OK	If not OK
1	Replace hydraulic unit	→ End	

Fault code 4231

Hydraulic power unit faulty

Diagnostic conditions

- Ignition switched on
- Front right inlet valve voltage actual value is evaluated internally and shows implausible value (valve circuit or driver output malfunction)

Possible cause of fault

- PSM hydraulic unit faulty

Affected terminals

-

Diagnosis/troubleshooting

Work instruction		Display OK	If not OK
1	Replace hydraulic unit	→ End	

Fault code 4236

Hydraulic power unit faulty

Diagnostic conditions

- Ignition switched on
- Front left outlet valve voltage actual value is evaluated internally and shows implausible value (valve circuit or driver output malfunction)

Possible cause of fault

- PSM hydraulic unit faulty

Affected terminals

–

Diagnosis/troubleshooting

Work instruction		Display OK	If not OK
1	Replace hydraulic unit	→ End	

Fault code 4241

Hydraulic power unit faulty

Diagnostic conditions

- Ignition switched on
- Front left inlet valve voltage actual value is evaluated internally and shows implausible value (valve circuit or driver output malfunction)

Possible cause of fault

- PSM hydraulic unit faulty

Affected terminals

–

Diagnosis/troubleshooting

Work instruction		Display OK	If not OK
1	Replace hydraulic unit	→ End	

Fault code 4246

Hydraulic power unit faulty

Diagnostic conditions

- Ignition switched on
- Rear right outlet valve voltage actual value is evaluated internally and shows implausible value (valve circuit or driver output malfunction)

Possible cause of fault

- PSM hydraulic unit faulty

Affected terminals

–

Diagnosis/troubleshooting

Work instruction		Display OK	If not OK
1	Replace hydraulic unit	→ End	

Fault code 4251

Hydraulic power unit faulty

Diagnostic conditions

- Ignition switched on
- Rear right inlet valve voltage actual value is evaluated internally and shows implausible value (valve circuit or driver output malfunction)

Possible cause of fault

♦ PSM hydraulic unit faulty

Affected terminals

-

Diagnosis/troubleshooting

Work instruction		Display OK	If not OK
1	Replace hydraulic unit	→ End	

Fault code 4256

Hydraulic power unit faulty

Diagnostic conditions

- Ignition switched on
- Rear left outlet valve voltage actual value is evaluated internally and shows implausible value (valve circuit or driver output malfunction)

Possible cause of fault

- PSM hydraulic unit faulty

Affected terminals

-

Diagnosis/troubleshooting

Work instruction		Display OK	If not OK
1	Replace hydraulic unit	→ End	

Fault code 4261

Hydraulic power unit faulty

Diagnostic conditions

- Ignition switched on
- Rear left outlet valve voltage actual value is evaluated internally and shows implausible value (valve circuit or driver output malfunction)

Possible cause of fault

- PSM hydraulic unit faulty

Affected terminals

-

Diagnosis/troubleshooting

Work instruction		Display OK	If not OK
1	Replace hydraulic unit	→ End	

Fault code 4266

Return pump fault

Diagnostic conditions

- Return pump voltage and motor relay voltage actual values are evaluated and display implausible values
- Open circuit in circuit to control module terminal 1

Possible cause of fault

- Return pump motor locked up/runs too easily
- Wire/ plug connection faulty
- PSM hydraulic unit faulty

Affected terminals

Terminal 1

Diagnosis/troubleshooting

Work instruction			Display OK	If not OK
1	Check ground lead of the return pump	♦ Switch off ignition ♦ Pull off the PSM control module plug ♦ Measure resistance between PSM control module plug pin 1 and ground	< 5 Ω ⇒ Step 2	Open circuit between PSM control module plug terminal 1 and ground point of PSM Repair wiring harness → End
2	Hydraulic unit defective		→ End	

Fault code 4276

Valve relay

Diagnostic conditions

- Actual values of solenoid valves are evaluated and display implausible values
- Valve relay does not pick up, drops out or sticks
- Short circuit to ground or open circuit in circuit to control module terminal 6

Possible cause of fault

- Fuse E9 faulty
- Wire/ plug connection faulty
- PSM hydraulic unit faulty

Affected terminals

Terminal 6

Diagnosis/troubleshooting

Work instruction			Display OK	If not OK
1	Check supply voltage of the valve relay	♦ Switch off ignition ♦ Pull plug off the PSM control module ♦ Measure voltage between PSM control module plug pin 6 and ground	> 11 V ⇒ Step 2	Check following components: ♦ Fuse E9 ♦ Fuse F7 → End
2	Replace hydraulic unit		→ End	

Fault code 4281

Brake fluid level

Diagnostic conditions

- Status of the brake fluid level switch is evaluated and displays an implausible value
- Short circuit to ground or open circuit in circuit to control module terminal 36
- The filtering time until the fault code is set is approx. 20 seconds

Possible cause of fault

- Brake fluid level too low
- Wiring/ plug connection faulty
- PSM hydraulic unit faulty

Affected terminals

Terminal 36

Diagnosis/troubleshooting

Work instruction			Display OK	If not OK
1	Brake fluid	♦ Check the brake fluid level	OK ⇒ Step 2	Correct the fluid level → End
2	Check ground lead of the level switch	♦ Ignition off ♦ Pull plug off brake fluid level switch ♦ Measure resistance between terminal 2 of plug on brake fluid level switch and ground	< 5 Ω ⇒ Step 3	Open circuit between terminal 2 of plug on brake fluid level switch and ground point 3 → End

Work instruction			Display OK	If not OK
3	Check level switch	♦ Measure resistance between terminal 1 of brake fluid level switch socket and terminal 2 of brake fluid level switch socket	approx. 100 Ω (at 20 °C) ⇒ Step 4	♦ < 100 Ω Short circuit in circuit between brake fluid level switch terminal 1 and brake fluid level switch terminal 2 ♦ Open circuit between brake fluid level switch terminal 1 and brake fluid level switch terminal 2 → End
4	Check signal lead of the level switch	♦ Pull off the PSM control module plug ♦ Measure resistance between PSM control module plug terminal 36 and brake fluid level switch terminal 1	< 5 Ω ⇒ Step 5	Open circuit between PSM control module plug terminal 36 and brake fluid level switch terminal 1 → End
5	Check signal lead of the level switch for short circuit to B+	♦ Pull off plug II on the instrument cluster ♦ Switch on ignition ♦ Measure voltage between PSM control module plug terminal 36 and ground	< 0.3 V ⇒ Step 6	Short circuit to voltage between PSM control module plug terminal 36 and brake fluid level switch terminal 1 and instrument cluster plug terminal II/4 → End
6	Check signal lead of the level switch for short circuit to ground	♦ Switch off ignition ♦ Measure resistance between PSM control module plug terminal 36 and ground	> 500Ω ⇒ Step 7	Short circuit to ground between PSM control module plug terminal 36 and brake fluid level switch terminal 1 and instrument cluster plug terminal II/4 → End
7	PSM control module faulty		→ End	

Fault code 4340

Stop light switch

Diagnostic conditions

- Ignition on

Possible cause of fault

- Short circuit to ground/voltage or open circuit in circuit to control module terminals 32, 37
- Wiring/ plug connection faulty
- Mechanism of the stop light switch not OK
- Adjustment of the stop light switch not OK
- Pressure sensor plausibility

Affected terminals

Terminals 32, 37

Diagnosis/troubleshooting

Work instruction			Display OK	If not OK
1	Stop light switch function test	♦ Switch off ignition ♦ Remove stop light switch ♦ Measure resistance between pins 1 and 3 ♦ Actuate stop light switch ♦ Measure resistance between pins 1 and 2 ♦ Actuate stop light switch ♦ Install stop light switch	0 - 5 Ω ∞ Ω ∞ Ω 0 - 5 Ω ⇒ Step 2	Replace stop light switch → End
2	Check lead from PSM control module to stop light switch for short circuit to ground/open circuit	♦ Pull off the PSM control module plug ♦ Switch on ignition ♦ Measure voltage between PSM control module plug pin 37 and ground	> 11 V ⇒ Step 2	Short circuit to ground or open circuit between PSM control module plug pin 37 and ignition lock pin 15 → End

Work instruction			Display OK	If not OK
3	Check lead from PSM control module to stop light switch for short circuit to voltage	♦ Brake pedal actuated ♦ Measure voltage between PSM control module plug pin 37 and ground	< 0.3 V ⇒ Step 3	Short circuit to voltage between PSM control module plug pin 37 and stop light switch pin 3 → End
4	Short circuit to ground/ open circuit in the signal circuit	♦ Brake pedal actuated ♦ Measure voltage between PSM control module plug pin 32 and ground	> 11 V ⇒ Step 4	Short circuit to ground or open circuit between PSM control module plug pin 32 and stop light switch pin 2, or stop light switch faulty → End
5	Short circuit to voltage in signal circuit	♦ Brake pedal not actuated ♦ Measure voltage between PSM control module plug pin 32 and ground	< 0.3 V ⇒ Step 5	Short circuit to voltage between PSM control module plug pin 32 and stop light switch pin 2 → End
6	PSM control module faulty		→ End	

Fault code 4420

Rate-of-turn sensor

Note!

If the fault codes 4400 Transverse acceleration sensor, 4420 Rate-of-turn sensor and 4440 Steering-angle sensor are displayed together, there may be an open circuit in the circuit to control module terminal 39.

Diagnostic conditions

- Rate-of-turn sensor actual value is evaluated and displays an implausible value

Possible cause of fault

- Short circuit to ground/voltage or open circuit in circuit to control module terminals 9, 10, 21, 39, 41
- Wiring/ plug connection faulty
- Rate-of-turn sensor faulty
- PSM control module faulty

Affected terminals

Terminals 9, 10, 21, 39, 41

Diagnosis/troubleshooting

The following troubleshooting procedure applies to the rate-of-turn sensor 996.606.145.00 as of 08/00.

Rate-of-turn sensor 996.606.145.00 ►

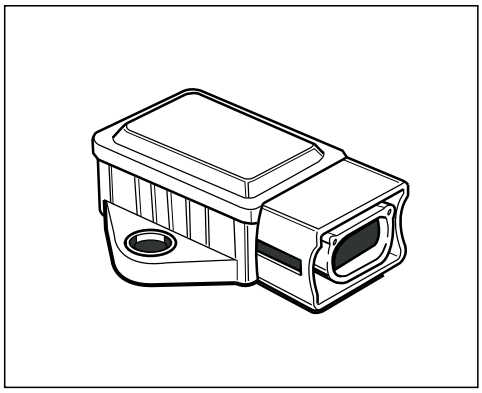

Work instruction			Display OK	If not OK
1	Check power supply of the rate-of-turn sensor	♦ Switch off ignition ♦ Pull plug off the rate-of-turn sensor ♦ Switch on ignition ♦ Measure voltage between pin 3 of rate-of-turn sensor plug and ground	> 11 V ⇒ Step 2	Open circuit in circuit between PSM control module plug pin 39 and pin 3 of the rate-of-turn sensor plug, or PSM contol module faulty → End
2	Check ground of the rate-of-turn sensor	♦ Measure voltage between pin 3 of the rate-of-turn sensor plug and pin 6 of the rate-of-turn sensor plug	> 11 V ⇒ Step 3	Open circuit in circuit between PSM control module plug pin 21 and pin 6 of the rate-of-turn sensor plug, or PSM contol module faulty → End
3	Check reference voltage of the rate-of-turn sensor	♦ Measure voltage between pin 1 of the rate-of-turn sensor plug and pin 6 of the rate-of-turn sensor plug	approx. 2.5 V ⇒ Step 4	Open circuit in circuit between PSM control module plug pin 10 and pin 1 of the rate-of-turn sensor plug, or PSM contol module faulty → End
4	Check leads from PSM control module to rate-of-turn sensor for short circuit to voltage	♦ Switch off ignition ♦ Pull off the PSM control module plug ♦ Switch on ignition ♦ Measure voltage between pins 1, 2 and 4 of the rate-of-turn sensor plug and ground	< 0.3 V ⇒ Step 5	Short circuit to voltage between pins 1, 2 and 4 of the rate-of-turn sensor plug and pins 10, 9 and 41 of the PSM control module plug → End
5	Check leads from PSM control module to rate-of-turn sensor for short circuit to ground	♦ Switch off ignition ♦ Measure resistance between pins 1, 2 and 4 of the rate-of-turn sensor plug and ground	< 5 Ω ⇒ Step 6	Short circuit to ground between pins 1, 2 and 4 of the rate-of-turn sensor plug and pins 10, 9 and 41 of the PSM control module plug → End
6	Check leads from PSM control module to rate-of-turn sensor for open circuit	♦ Measure resistance between pins 1, 2 and 4 of the rate-of-turn sensor plug and pins 10, 9 and 41 of the PSM control module plug	< 5 Ω ⇒ Step 7	Open circuit between pins 1, 2 and 4 of the rate-of-turn sensor plug and pins 10, 9 and 41 of the PSM control module plug → End

Work instruction			Display OK	If not OK
7	Check leads from PSM control module to rate-of-turn sensor for short circuit	♦ Measure resistance between pin 1 of the rate-of-turn sensor plug and pins 2 and 4 of the rate-of-turn sensor plug ♦ Measure resistance between pin 2 of the rate-of-turn sensor plug and pin 4 of the rate-of-turn sensor plug	∞ Ω ⇒ Step 8	Short circuit in wiring harness between pins 1, 2 and 4 of the rate-of-turn sensor plug and pins 10, 9 and 41 of the PSM control module plug → End
8	Rate-of-turn sensor faulty		→ End	

Diagnosis/troubleshooting

Note!

If the rate-of-turn sensor with part No. 996.606.147.00 is determined to be faulty, install the new rate-of-turn sensor with part No. 996.606.145.00. The front centre console holder and the lower front centre console support must be replaced for this purpose. An adapter plug must be used for the plug connection.⇒ Rep. Gr. 455931

The following troubleshooting procedure applies to the rate-of-turn sensor 996.606.147.00 up to 07/00.

Rate-of-turn sensor 996.606.147.00 ►

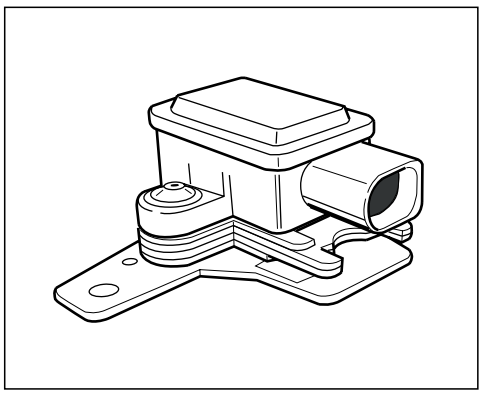

Work instruction			Display OK	If not OK
1	Check power supply of the rate-of-turn sensor	♦ Switch off ignition ♦ Pull plug off the rate-of-turn sensor ♦ Switch on ignition ♦ Measure voltage between pin 1 of rate-of-turn sensor plug and ground	> 11 V ⇒ Step 2	Open circuit in circuit between PSM control module plug pin 39 and pin 1 of the rate-of-turn sensor plug, or PSM contol module faulty → End
2	Check ground of the rate-of-turn sensor	♦ Measure voltage between pin 1 of the rate-of-turn sensor plug and pin 2 of the rate-of-turn sensor plug	> 11 V ⇒ Step 3	Open circuit in circuit between PSM control module plug pin 21 and pin 2 of the rate-of-turn sensor plug, or PSM contol module faulty → End
3	Check reference voltage of the rate-of-turn sensor	♦ Measure voltage between pin 5 of the rate-of-turn sensor plug and pin 2 of the rate-of-turn sensor plug	approx. 2.5 V ⇒ Step 4	Open circuit in circuit between PSM control module plug pin 10 and pin 5 of the rate-of-turn sensor plug, or PSM contol module faulty → End
4	Check leads from PSM control module to rate-of-turn sensor for short circuit to voltage	♦ Switch off ignition ♦ Pull off the PSM control module plug ♦ Switch on ignition ♦ Measure voltage between pins 3, 5 and 6 of the rate-of-turn sensor plug and ground	< 0.3 V ⇒ Step 5	Short circuit to voltage between pins 3, 5 and 6 of the rate-of-turn sensor plug and pins 10, 9 and 41 of the PSM control module plug → End
5	Check leads from PSM control module to rate-of-turn sensor for short circuit to ground	♦ Switch off ignition ♦ Measure resistance between pins 3, 5 and 6 of the rate-of-turn sensor plug and ground	< 5 Ω ⇒ Step 6	Short circuit to ground between pins 3, 5 and 6 of the rate-of-turn sensor plug and pins 9, 10 and 41 of the PSM control module plug → End
6	Check leads from PSM control module to rate-of-turn sensor for open circuit	♦ Measure resistance between pins 3, 5 and 6 of the rate-of-turn sensor plug and pins 9, 10 and 41 of the PSM control module plug	< 5 Ω ⇒ Step 7	Open circuit between pins 3, 5 and 6 of the rate-of-turn sensor plug and pins 9, 10 and 41 of the PSM control module plug → End

Work instruction			**Display OK**	**If not OK**
7	Check leads from PSM control module to rate-of-turn sensor for short circuit	♦ Measure resistance between pin 5 of the rate-of-turn sensor plug and pins 3 and 6 of the rate-of-turn sensor plug ♦ Measure resistance between pin 3 of the rate-of-turn sensor plug and pin 6 of the rate-of-turn sensor plug	∞ Ω ⇒ Step 8	Short circuit in wiring harness between pins 3, 5 and 6 of the rate-of-turn sensor plug and pins 9, 10 and 41 of the PSM control module plug → End
8	Rate-of-turn sensor faulty		→ End	

Fault code 4440

Steering angle sensor

Note!

If the fault codes 4400 "Transverse acceleration sensor", 4420 "Rate-of-turn sensor" and 4440 "Steering-angle sensor" are displayed together, there may be an open circuit in the circuit to control module terminal 39.

Diagnostic conditions

- Steering angle sensor actual value is evaluated and displays an implausible value

Possible cause of fault

- Short circuit to ground/voltage or open circuit in circuit to control module terminals 21, 39
- Steering angle sensor calibration incorrect
- Wiring/ plug connection faulty
- Steering angle sensor faulty

Affected terminals

Terminals 21, 39

Diagnosis/troubleshooting

Note!

Calibration of the steering angle sensor must be performed on a measuring platform. The steering angle sensor must be calibrated after work has been carried out on the running gear in the area of the front axle. The security code is required for calibration of the steering angle sensor. The security code is read with the PST2 under menu item "Actual values". Calibration is described in⇒ Rep. Gr. 4560; Calibrating steering angle sensor.

Work instruction			Display OK	If not OK
1	Check calibration of the steering angle sensor	♦ Calibrate steering angle sensor	Calibration was incorrect → End	⇒ Step 2
2	Check power supply of the steering angle sensor	♦ Switch off ignition ♦ Pull off steering angle sensor plug ♦ Switch on ignition ♦ Measure voltage between pin 3 of steering angle sensor plug and ground	> 11 V ⇒ Step 3	Open circuit between PSM control module plug pin 39 and pin 3 of the steering angle sensor plug, or PSM contol module faulty → End
3	Check ground of the steering angle sensor	♦ Measure voltage between pin 3 of the steering angle sensor plug and pin 4 of the steering angle sensor plug	> 11 V ⇒ Step 4	Open circuit between PSM control module plug pin 21 and pin 4 of the steering angle sensor plug, or PSM contol module faulty → End
4	Check CAN-high lead from PSM control module to steering angle sensor for open circuit	♦ Switch off ignition ♦ Pull off the PSM control module plug ♦ Measure resistance between pin 2 of steering angle sensor plug and PSM control module plug pin 24	< 5 Ω ⇒ Step 5	Open circuit between pin 2 of steering angle sensor plug and PSM control module plug pin 24 → End
5	Check CAN-low lead from PSM control module to steering angle sensor for open circuit	♦ Measure resistance between pin 1 of steering angle sensor plug and PSM control module plug pin 40	< 5 Ω ⇒ Step 6	Open circuit between pin 1 of steering angle sensor plug and PSM control module plug pin 40 → End
6	Steering angle sensor faulty		→ End	

Fault code 4460

Pressure sensor

Diagnostic conditions

- Pressure sensor actual value is evaluated and displays an implausible value

Possible cause of fault

- Short circuit to ground/voltage or open circuit in circuit to control module terminals 25, 26 and 42
- Plug connection on stop light switch faulty
- Adjustment of the stop light switch not OK
- Wiring/ plug connection faulty
- Pressure sensor faulty (replace hydraulic unit)

Affected terminals

Terminals 25, 26 and 42

Diagnosis/troubleshooting

Work instruction			Display OK	If not OK
1	Visual inspection	♦ Check the pressure sensor plug for damage and corrosion	⇒ Step 2	Repair pressure sensor plug
2	Check supply voltage of the pressure sensor for short circuit to ground/ open circuit	♦ Switch off ignition ♦ Pull off pressure sensor plug ♦ Switch on ignition ♦ Measure voltage between pin 3 of pressure sensor plug and ground	approx. 5 V ⇒ Step 3	♦ Display 0 V: Short circuit to ground/open circuit in circuit between PSM control module plug pin 42 and pressure sensor plug pin 3 ♦ Display > 11 V Short circuit to voltage between PSM control module plug pin 42 and pin 3 of the booster pump pressure sensor plug, or PSM contol module faulty → End

Work instruction			Display OK	If not OK
3	Check ground of pressure sensor for open circuit	♦ Measure voltage between pin 3 of the booster pump pressure sensor plug and pin 1 of the booster pump pressure sensor plug	approx. 5 V ⇒ Step 4	Open circuit in circuit between PSM control module plug pin 25 and pin 1 of the booster pump pressure sensor plug, or PSM contol module faulty → End
4	Check signal lead of the pressure sensor for short circuit to voltage	♦ Measure voltage between pin 2 of the booster pump pressure sensor plug and ground	< 0.3 V ⇒ Step 5	Short circuit to voltage between pin 2 of booster pump pressure sensor plug and PSM control module plug pin 26 → End
5	Check signal lead of the pressure sensor for short circuit to ground	♦ Switch off ignition ♦ Measure resistance between pin 2 of the booster pump pressure sensor plug and ground	< 5 Ω ⇒ Step 6	Short circuit to ground between pin 2 of booster pump pressure sensor plug and PSM control module plug pin 26 → End
6	Check signal lead of the pressure sensor for open circuit	♦ Measure resistance between pin 2 of the booster pump pressure sensor plug and PSM control module plug pin 26	< 5 Ω ⇒ Step 7	Open circuit between pin 2 of the booster pump pressure sensor plug and PSM control module plug pin 26 → End
7	Replace hydraulic unit		→ End	

Fault code 4480

Booster pump

Diagnostic conditions

- Booster pump actual value is evaluated and displays an implausible value

Possible cause of fault

- Short circuit to ground/voltage or open circuit in circuit to control module terminals 2, 3 and 4
- Booster pump motor locked up/faulty
- Wiring/ plug connection faulty

Note!

Do not jumper the pump; it must not run dry under any circumstances!

Affected terminals

Terminals 2, 3 and 4

Diagnosis/troubleshooting

Work instruction			Display OK	If not OK
1	Check supply voltage of the booster pump for short circuit to ground/ open circuit	• Switch off ignition • Pull off the PSM control module plug • Measure voltage between PSM control module plug pin 2 and ground	> 11 V ⇒ Step 2	Short circuit to ground or open circuit between PSM control module plug pin 2 and fuse F1 → End
2	Check signal lead of the booster pump for short circuit to voltage	• Switch on ignition • Measure voltage between PSM control module plug pin 4 and ground	< 0.3 V ⇒ Step 3	Short circuit to voltage between PSM control module plug pin 4 and pin 1 of PSM booster pump plug → End

Work instruction			Display OK	If not OK
3	Check signal lead of the booster pump for short circuit to ground	♦ Switch off ignition ♦ Measure resistance between PSM control module plug pin 4 and ground	> 500 kΩ ⇒ Step 4	Short circuit to ground between PSM control module plug pin 4 and pin 1 of PSM booster pump plug → End
4	Check signal lead of the booster pump for short circuit to voltage	♦ Switch on ignition ♦ Measure voltage between PSM control module plug pin 3 and ground	< 0.3 V ⇒ Step 5	Short circuit to voltage between PSM control module plug pin 3 and pin 2 of PSM booster pump plug → End
5	Check signal lead of the booster pump for short circuit to ground	♦ Switch off ignition ♦ Measure resistance between PSM control module plug pin 3 and ground	> 500 kΩ ⇒ Step 6	Short circuit to ground between PSM control module plug pin 3 and pin 2 of PSM booster pump plug → End
6	Check activation of the booster with the PST2	♦ Connect the PSM control module plug ♦ Pull off the PSM booster pump plug ♦ Switch on ignition ♦ Diagnostic tester: start drive link test on booster pump ♦ Measure voltage between pin 1 of PSM booster pump plug and pin 2 of PSM booster pump plug	> 11 V ⇒ Step 7	PSM hydraulic unit faulty → End
7	Booster pump faulty		→ End	

Fault code 4607

Control module faulty

Diagnostic conditions

- Ignition on
- Internal function test

Possible cause of fault

- PSM control module faulty

Affected terminals

-

Diagnosis/troubleshooting

Work instruction		Display OK	If not OK
1	Replace hydraulic unit	→ End	

Fault code 4802

Undervoltage

Diagnostic conditions

- Internal control module function test
- Voltage less than 9.8 V (voltage supply for control module, rate-of-turn sensor and steering angle sensor)
- Vehicle speed is greater than 6 $^{km}/_{h}$

Note!

Once the vehicle voltage is within the permissible voltage range again, the PSM system is switched back on and the indicator lights go out.

Possible cause of fault

- Vehicle voltage was too low
- Faulty connection to PSM control module

Affected terminals

Terminals 1, 5 and 23

Diagnosis/troubleshooting

Work instruction			Display OK	If not OK
1	Check ground for open circuit	♦ Switch off ignition ♦ Pull off the PSM control module plug ♦ Measure resistance between PSM control module plug pins 1 and 5 and ground	< 5 Ω ⇒ Step 2	Open circuit or high contact resistance between pins 1 and 5 of PSM control module plug and PSM ground point → End
2	Erase fault memory and read out again after test drive		→ End	

Fault code 5024

CAN message missing from Tiptronic

Diagnostic conditions

- Ignition on
- No CAN messages from the Tiptronic control module
- Short circuit to ground/voltage or open circuit in circuit to control module terminals 24, 40

Possible cause of fault

- CAN bus connection faulty
- Incorrect version coded
- Tiptronic control module faulty

Affected terminals

Terminals 24, 40

Diagnosis/troubleshooting

Note!

- *Before troubleshooting, read out the fault memory of the Tiptronic control module and eliminate any faults present.*
- *If the fault "39 CAN: DME communication disturbed" is present in the Tiptronic control module, there may be an open circuit in the CAN bus between the DME control module and the Tiptronic.*

Work instruction			Display OK	If not OK
1	Check CAN bus from DME contol unit to PSM control unit for open circuit	• Switch off ignition • Pull plug off PSM control module and Tiptronic control module • Measure resistance between DME control module plug pin D36 and PSM control module plug pin 24	< 5 Ω ⇒ Step 2	Open circuit between DME control module pin D36 and PSM control module pin 24 → End

Work instruction			Display OK	If not OK
2	Check CAN bus from DME contol unit to PSM control unit for open circuit	♦ Measure resistance between DME control module plug pin D37 and PSM control module plug pin 40	< 5 Ω ⇒ Step 3	Open circuit between DME control module pin D37 and PSM control module pin 40 → End
3	Replace Tiptronic control module		→ End	

Fault code 5260

Booster valve 1

Diagnostic conditions

- Ignition on

Possible cause of fault

- PSM hydraulic unit faulty

Affected terminals

-

Diagnosis/troubleshooting

Work instruction		Display OK	If not OK
1	Replace hydraulic unit	→ End	

Fault code 5262

Booster valve 2

Diagnostic conditions

- Ignition on

Possible cause of fault

- PSM hydraulic unit faulty

Affected terminals

–

Diagnosis/troubleshooting

Work instruction		Display OK	If not OK
1	Replace hydraulic unit	→ End	

Fault code 5265

Switch-over valve 1

Diagnostic conditions

- Ignition on
- Switch-over valve voltage actual value is evaluated internally and shows implausible value (valve circuit or driver output malfunction)

Possible cause of fault

- PSM hydraulic unit faulty

Affected terminals

–

Diagnosis/troubleshooting

Work instruction		Display OK	If not OK
1	Replace hydraulic unit	→ End	

Fault code 5267

Switch-over valve 2

Diagnostic conditions

- Ignition on
- Switch-over valve voltage actual value is evaluated internally and shows implausible value (valve circuit or driver output malfunction)

Possible cause of fault

- PSM hydraulic unit faulty

Affected terminals

–

Diagnosis/troubleshooting

Work instruction		Display OK	If not OK
1	Replace hydraulic unit	→ End	

Fault code 5281

Version coding error

Diagnostic conditions

- Ignition switched on
- Deviation between required coding in the control module and actual coding of the vehicle version.
- The fault code is available in the as-delivered condition of the control module. It does not display an existing fault, but ensures that the system indicator light remains activated after the first installation of the control module in the vehicle until the control module has been correctly programmed.

Possible cause of fault

- PSM control module was newly installed
- Coding not OK

Affected terminals

-

Diagnosis/troubleshooting

Work instruction		Display OK	If not OK
1	Code the control module	→ End	

Fault code 5500

Wheel speed monitoring

Diagnostic conditions

- The fault is stored if the average speed of one wheel is at least 5 % greater than the speed of the other wheels for longer than 20 s.
- Vehicle speed is greater than 6 $^{km}/_{h}$
- ABS control not active

Possible cause of fault

- Toothed discs soiled/damaged
- Incorrect tyre pressure, wheel size (collapsible wheel, spare wheel)

Affected terminals

–

Diagnosis/troubleshooting

Note!

Check tyre pressure and wheel size. Erase fault memory and carry out a test drive.

Work instruction			Display OK	If not OK
1	Mechanical function	♦ Check speed sensor and toothed disc at the front left for soiling and external damage	OK ⇒ Step 2	Speed sensor or toothed disc faulty → End
2	Mechanical function	♦ Check speed sensor and toothed disc at the front right for soiling and external damage	OK ⇒ Step 3	Speed sensor or toothed disc faulty → End
3	Mechanical function	♦ Check speed sensor and toothed disc at the rear left for soiling and external damage	OK ⇒ Step 4	Speed sensor or toothed disc faulty → End
4	Mechanical function	♦ Check speed sensor and toothed disc at the rear right for soiling and external damage	OK ⇒ Step 5	Speed sensor or toothed disc faulty → End
5	PSM control module faulty		→ End	

Fault code 5504

Extraordinary operating condition

Diagnostic conditions

- The fault is stored in the event of continual control operations. (Extreme driving situation: snow-covered circular paths, icy roads, constant braking)

Possible cause of fault

- Vehicle was in an extraordinary operating condition

Affected terminals

-

Diagnosis/troubleshooting

	Work instruction	Display OK	If not OK
1	Erase fault memory and test-drive the vehicle	→ End	

Fault code 5505

Electrical system (steering angle sensor)

Diagnostic conditions

- Ignition on
- The fault is stored in the event of a fault in the electrical system of the steering angle sensor or in case of a voltage drop.

Possible cause of fault

- Wiring faulty
- Voltage drop/weak battery
- Steering angle sensor faulty

Affected terminals

Terminals 21 and 39

Diagnosis/troubleshooting

Note!

Erase fault memory and carry out a test drive.

Work instruction			Display OK	If not OK
1	Check calibration of the steering angle sensor	♦ Calibrate steering angle sensor	Calibration was incorrect → End	⇒ Step 2
2	Check power supply of the steering angle sensor	♦ Switch off ignition ♦ Pull off steering angle sensor plug ♦ Switch on ignition ♦ Measure voltage between pin 3 of steering angle sensor plug and ground	> 11 V ⇒ Step 3	Open circuit between PSM control module plug pin 39 and pin 3 of the steering angle sensor plug, or PSM contol module faulty → End
3	Check ground of the steering angle sensor	♦ Measure voltage between pin 3 of the steering angle sensor plug and pin 4 of the steering angle sensor plug	> 11 V ⇒ Step 4	Open circuit between PSM control module plug pin 21 and pin 4 of the steering angle sensor plug, or PSM contol module faulty → End

Work instruction			Display OK	If not OK
4	Check CAN-high lead from PSM control module to steering angle sensor for open circuit	♦ Switch off ignition ♦ Pull off the PSM control module plug ♦ Measure resistance between pin 2 of steering angle sensor plug and PSM control module plug pin 24	< 5 Ω ⇒ Step 5	Open circuit between pin 2 of steering angle sensor plug and PSM control module plug pin 24 → End
5	Check CAN-low lead from PSM control module to steering angle sensor for open circuit	♦ Measure resistance between pin 1 of steering angle sensor plug and PSM control module plug pin 40	< 5 Ω ⇒ Step 6	Open circuit between pin 1 of steering angle sensor plug and PSM control module plug pin 40 → End
6	Steering angle sensor faulty		→ End	

Fault code 5506

Electrical system (rate-of-turn sensor)

Diagnostic conditions

- Ignition on
- The fault is stored in the event of a fault in the electrical system of the rate-of-turn sensor or in case of a voltage drop.

Possible cause of fault

- Wiring faulty
- Voltage drop/weak battery
- Rate-of-turn sensor faulty

Affected terminals

Terminals 9, 10, 21, 39 and 41

Diagnosis/troubleshooting

Note!

Erase fault memory and carry out a test drive.

The following troubleshooting procedure applies to the rate-of-turn sensor 996.606.145.00 as of 08/00.

Rate-of-turn sensor 996.606.145.00 ►

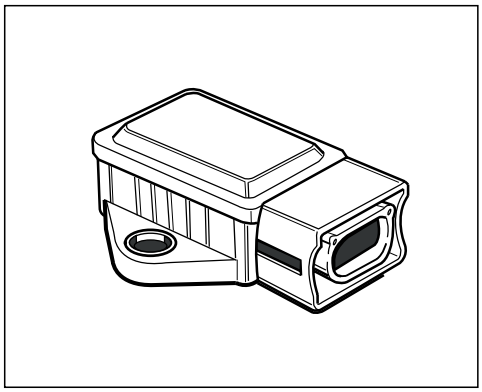

Work instruction			Display OK	If not OK
1	Check power supply of the rate-of-turn sensor	♦ Switch off ignition ♦ Pull plug off the rate-of-turn sensor ♦ Switch on ignition ♦ Measure voltage between pin 3 of rate-of-turn sensor plug and ground	> 11 V ⇒ Step 2	Open circuit in circuit between PSM control module plug pin 39 and pin 3 of the rate-of-turn sensor plug, or PSM contol module faulty → End
2	Check ground of the rate-of-turn sensor	♦ Measure voltage between pin 3 of the rate-of-turn sensor plug and pin 6 of the rate-of-turn sensor plug	> 11 V ⇒ Step 3	Open circuit in circuit between PSM control module plug pin 21 and pin 6 of the rate-of-turn sensor plug, or PSM contol module faulty → End
3	Check reference voltage of the rate-of-turn sensor	♦ Measure voltage between pin 1 of the rate-of-turn sensor plug and pin 6 of the rate-of-turn sensor plug	approx. 2.5 V ⇒ Step 4	Open circuit in circuit between PSM control module plug pin 10 and pin 1 of the rate-of-turn sensor plug, or PSM contol module faulty → End
4	Check leads from PSM control module to rate-of-turn sensor for short circuit to voltage	♦ Switch off ignition ♦ Pull off the PSM control module plug ♦ Switch on ignition ♦ Measure voltage between pins 1, 2 and 4 of the rate-of-turn sensor plug and ground	< 0.3 V ⇒ Step 5	Short circuit to voltage between pins 1, 2 and 4 of the rate-of-turn sensor plug and pins 10, 9 and 41 of the PSM control module plug → End
5	Check leads from PSM control module to rate-of-turn sensor for short circuit to ground	♦ Switch off ignition ♦ Measure resistance between pins 1, 2 and 4 of the rate-of-turn sensor plug and ground	< 5 Ω ⇒ Step 6	Short circuit to ground between pins 1, 2 and 4 of the rate-of-turn sensor plug and pins 10, 9 and 41 of the PSM control module plug → End
6	Check leads from PSM control module to rate-of-turn sensor for open circuit	♦ Measure resistance between pins 1, 2 and 4 of the rate-of-turn sensor plug and pins 10, 9 and 41 of the PSM control module plug	< 5 Ω ⇒ Step 7	Open circuit between pins 1, 2 and 4 of the rate-of-turn sensor plug and pins 10, 9 and 41 of the PSM control module plug → End

Work instruction			Display OK	If not OK
7	Check leads from PSM control module to rate-of-turn sensor for short circuit	♦ Measure resistance between pin 1 of the rate-of-turn sensor plug and pins 2 and 4 of the rate-of-turn sensor plug ♦ Measure resistance between pin 2 of the rate-of-turn sensor plug and pin 4 of the rate-of-turn sensor plug	∞ Ω ⇒ Step 8	Short circuit in wiring harness between pins 1, 2 and 4 of the rate-of-turn sensor plug and pins 10, 9 and 41 of the PSM control module plug → End
8	Rate-of-turn sensor faulty		→ End	

Diagnosis/troubleshooting

Note!

If the rate-of-turn sensor with part No. 996.606.147.00 is determined to be faulty, install the new rate-of-turn sensor with part No. 996.606.145.00. The front centre console holder and the lower front centre console support must be replaced for this purpose. An adapter plug must be used for the plug connection.⇒ Rep. Gr. 455931

The following troubleshooting procedure applies to the rate-of-turn sensor 996.606.147.00 up to 07/00.

Rate-of-turn sensor 996.606.147.00 ►

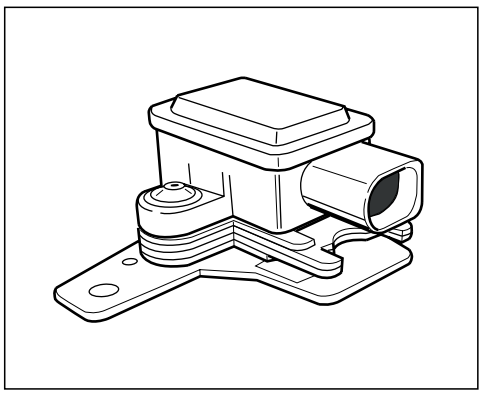

Work instruction			Display OK	If not OK
1	Check power supply of the rate-of-turn sensor	♦ Switch off ignition ♦ Pull plug off the rate-of-turn sensor ♦ Switch on ignition ♦ Measure voltage between pin 1 of rate-of-turn sensor plug and ground	> 11 V ⇒ Step 2	Open circuit in circuit between PSM control module plug pin 39 and pin 1 of the rate-of-turn sensor plug, or PSM contol module faulty → End
2	Check ground of the rate-of-turn sensor	♦ Measure voltage between pin 1 of the rate-of-turn sensor plug and pin 2 of the rate-of-turn sensor plug	> 11 V ⇒ Step 3	Open circuit in circuit between PSM control module plug pin 21 and pin 2 of the rate-of-turn sensor plug, or PSM contol module faulty → End
3	Check reference voltage of the rate-of-turn sensor	♦ Measure voltage between pin 5 of the rate-of-turn sensor plug and pin 2 of the rate-of-turn sensor plug	approx. 2.5 V ⇒ Step 4	Open circuit in circuit between PSM control module plug pin 10 and pin 5 of the rate-of-turn sensor plug, or PSM contol module faulty → End
4	Check leads from PSM control module to rate-of-turn sensor for short circuit to voltage	♦ Switch off ignition ♦ Pull off the PSM control module plug ♦ Switch on ignition ♦ Measure voltage between pins 3, 5 and 6 of the rate-of-turn sensor plug and ground	< 0.3 V ⇒ Step 5	Short circuit to voltage between pins 3, 5 and 6 of the rate-of-turn sensor plug and pins 10, 9 and 41 of the PSM control module plug → End
5	Check leads from PSM control module to rate-of-turn sensor for short circuit to ground	♦ Switch off ignition ♦ Measure resistance between pins 3, 5 and 6 of the rate-of-turn sensor plug and ground	< 5 Ω ⇒ Step 6	Short circuit to ground between pins 3, 5 and 6 of the rate-of-turn sensor plug and pins 9, 10 and 41 of the PSM control module plug → End
6	Check leads from PSM control module to rate-of-turn sensor for open circuit	♦ Measure resistance between pins 3, 5 and 6 of the rate-of-turn sensor plug and pins 9, 10 and 41 of the PSM control module plug	< 5 Ω ⇒ Step 7	Open circuit between pins 3, 5 and 6 of the rate-of-turn sensor plug and pins 9, 10 and 41 of the PSM control module plug → End

Work instruction			**Display OK**	**If not OK**
7	Check leads from PSM control module to rate-of-turn sensor for short circuit	♦ Measure resistance between pin 5 of the rate-of-turn sensor plug and pins 3 and 6 of the rate-of-turn sensor plug ♦ Measure resistance between pin 3 of the rate-of-turn sensor plug and pin 6 of the rate-of-turn sensor plug	∞ Ω ⇒ Step 8	Short circuit in wiring harness between pins 3, 5 and 6 of the rate-of-turn sensor plug and pins 9, 10 and 41 of the PSM control module plug → End
8	Rate-of-turn sensor faulty		→ End	

Fault code 5520

CAN data bus (drive)

Diagnostic conditions

- Ignition on

Possible cause of fault

- CAN bus fault. Overall communication disturbed

Affected terminals

Terminals 24, 40

Diagnosis/troubleshooting

Work instruction			Display OK	If not OK
1	Check CAN bus between DME control module and Tiptronic control module for short circuit to voltage	♦ Switch off ignition ♦ Pull off DME control module plug and Tiptronic control module plug ♦ Switch on ignition ♦ Measure voltage between Tiptronic control module plug pin L and ground	< 0.3 V ⇒ Step 2	Short circuit to voltage in the CAN wiring harness between Tiptronic control module plug pin L and DME control module plug pin B3 → End
2	Check CAN bus between DME control module and Tiptronic control module for short circuit to voltage	♦ Measure voltage between Tiptronic control module plug pin H and ground	< 0.3 V ⇒ Step 3	Short circuit to voltage in the CAN wiring harness between Tiptronic control module plug pin H and DME control module plug pin B4 → End
3	Check CAN bus between DME control module and Tiptronic control module for short circuit to ground	♦ Switch off ignition ♦ Measure resistance between Tiptronic control module plug pin H and ground	∞ Ω ⇒ Step 4	Short circuit to ground in the CAN wiring harness between Tiptronic control module plug pin H and DME control module plug pin B4

Work instruction			Display OK	If not OK
4	Check CAN bus between DME control module and Tiptronic control module for short circuit to ground	♦ Measure resistance between Tiptronic control module plug pin L and ground	∞ Ω ⇒ Step 5	Short circuit to ground in the CAN wiring harness between Tiptronic control module plug pin L and DME control module plug pin B3
5	Check CAN bus between DME control module and Tiptronic control module for short circuit	♦ Measure resistance between Tiptronic control module plug pin H and pin L	∞ Ω ⇒ Step 6	Short circuit in the CAN wiring harness between Tiptronic control module plug pin H and pin L and DME control module plug pin B3 and B4 → End
6	Check CAN bus between DME control module, instrument cluster, PSM control module and PSM steering-angle sensor for short circuit to voltage	♦ Pull off the following plugs: PSM control module plug, PSM steering-angle sensor plug and instrument cluster control module plug ♦ Switch on ignition ♦ Measure voltage between DME control module plug pin D36 and ground	< 0.3 V ⇒ Step 7	Short circuit to voltage in CAN wiring harness between DME control module plug pin D36, instrument cluster plug pin A15, PSM control module plug pin A24 and PSM steering-angle plug pin A2 → End
7	Check CAN bus between DME control module, instrument cluster, PSM control module and PSM steering-angle sensor for short circuit to voltage	♦ Measure voltage between DME control module plug pin D37 and ground	< 0.3 V ⇒ Step 8	Short circuit to voltage in CAN wiring harness between DME control module plug pin D37, instrument cluster plug pin A31, PSM control module plug pin A40 and PSM steering-angle plug pin A1 → End

Work instruction			**Display OK**	**If not OK**
8	Check CAN bus between DME control module, instrument cluster, PSM control module and PSM steering-angle sensor for short circuit to ground	♦ Switch off ignition ♦ Measure resistance between DME control module plug pin D37 and ground	∞ Ω ⇒ Step 9	Short circuit to ground in CAN wiring harness between DME control module plug pin D37, instrument cluster plug pin A31, PSM control module plug pin A40 and PSM steering-angle plug pin A1 → End
9	Check CAN bus between DME control module, instrument cluster, PSM control module and PSM steering-angle sensor for short circuit to ground	♦ Measure resistance between DME control module plug pin D36 and ground	∞ Ω ⇒ Step 10	Short circuit to ground in CAN wiring harness between DME control module plug pin D36, instrument cluster plug pin A15, PSM control module plug pin A24 and PSM steering-angle plug pin A2 → End
10	Check CAN bus between DME control module, instrument cluster, PSM control module and PSM steering-angle sensor for short circuit	♦ Measure resistance between DME control module plug pin D36 and DME control module plug pin D37	∞ Ω ⇒ Step 11	Short circuit in CAN wiring harness → End
11	Check control units	♦ Push on all control module plugs ♦ Disconnect the control modules one after the other and check whether the "CAN data bus (drive)" fault has been remedied	Replace the last control module to be disconnected → End	

Fault code 5521

Faulty data exchange

Diagnostic conditions

- Engine running
- Fault is sent by the DME control module via the CAN

Possible cause of fault

♦ Fault in DME

Affected terminals

-

Diagnosis/troubleshooting

Work instruction		Display OK	If not OK
1	See DME diagnosis	→ End	

Fault code 5522

DME: CAN message missing 1

Diagnostic conditions

- Engine running
- No CAN message from the DME control module

Possible cause of fault

- DME control module disconnected
- CAN bus connection faulty
- DME control module faulty

Affected terminals

-

Diagnosis/troubleshooting

Note!

Before troubleshooting, read out the fault memory of the DME control module and eliminate any faults present.

Work instruction			Display OK	If not OK
1	Check CAN bus from DME contol unit to PSM control unit for open circuit	♦ Switch off ignition ♦ Pull plug off PSM control module and Tiptronic control module ♦ Measure resistance between DME control module plug pin D36 and PSM control module plug pin 24	< 5 Ω ⇒ Step 2	Open circuit between DME control module pin D36 and PSM control module pin 24 → End
2	Check CAN bus from DME contol unit to PSM control unit for open circuit	♦ Measure resistance between DME control module plug pin D37 and PSM control module plug pin 40	< 5 Ω ⇒ Step 3	Open circuit between DME control module pin D37 and PSM control module pin 40 → End
3	Replace DME control module		→ End	

Fault code 5523

DME: CAN message missing 2

Diagnostic conditions

- Engine running
- No CAN message from the DME control module

Possible cause of fault

- DME control module disconnected
- CAN bus connection faulty
- DME control module faulty

Affected terminals

Terminals 24, 40

Diagnosis/troubleshooting

Note!

Before troubleshooting, read out the fault memory of the DME control module and eliminate any faults present.

Work instruction			Display OK	If not OK
1	Check CAN bus from DME contol unit to PSM control unit for open circuit	♦ Switch off ignition ♦ Pull plug off PSM control module and Tiptronic control module ♦ Measure resistance between DME control module plug pin D36 and PSM control module plug pin 24	< 5 Ω ⇒ Step 2	Open circuit between DME control module pin D36 and PSM control module pin 24 → End
2	Check CAN bus from DME contol unit to PSM control unit for open circuit	♦ Measure resistance between DME control module plug pin D37 and PSM control module plug pin 40	< 5 Ω ⇒ Step 3	Open circuit between DME control module pin D37 and PSM control module pin 40 → End
3	Replace DME control module		→ End	

Fault code 5524

DME: incorrect CAN rpm signal

Diagnostic conditions

- Engine running
- Fault is sent by the DME control module via the CAN

Possible cause of fault

♦ Fault in DME

Affected terminals

-

Diagnosis/troubleshooting

Work instruction		Display OK	If not OK
1	See DME diagnosis	→ End	

Fault code 5525

Torque transmission from the DME disturbed at times

Diagnostic conditions

- Engine running
- Fault is sent by the DME control module via the CAN

Possible cause of fault

♦ Fault in DME

Affected terminals

-

Diagnosis/troubleshooting

Work instruction		Display OK	If not OK
1	See DME diagnosis	→ End	

Fault code 5526

DME: incorrect accelerator-pedal value

Diagnostic conditions

- Engine running
- Fault is sent by the DME control module via the CAN

Possible cause of fault

♦ Fault in DME

Affected terminals

-

Diagnosis/troubleshooting

Work instruction		Display OK	If not OK
1	See DME diagnosis	→ End	

Fault code 5527

Transfer via CAN not possible

Diagnostic conditions

- Battery positive voltage > 10 V
- Electrical test of CAN bus
- Short circuit to ground/voltage or open circuit in circuit to control module terminals 24, 40

Possible cause of fault

- CAN bus connection faulty

Affected terminals

Terminals 24, 40

Diagnosis/troubleshooting

Work instruction			Display OK	If not OK
1	Check CAN bus between DME control module and Tiptronic control module for short circuit to voltage	♦ Switch off ignition ♦ Pull off DME control module plug and Tiptronic control module plug ♦ Switch on ignition ♦ Measure voltage between Tiptronic control module plug pin L and ground	< 0.3 V ⇒ Step 2	Short circuit to voltage in the CAN wiring harness between Tiptronic control module plug pin L and DME control module plug pin B3 → End
2	Check CAN bus between DME control module and Tiptronic control module for short circuit to voltage	♦ Measure voltage between Tiptronic control module plug pin H and ground	< 0.3 V ⇒ Step 3	Short circuit to voltage in the CAN wiring harness between Tiptronic control module plug pin H and DME control module plug pin B4 → End
3	Check CAN bus between DME control module and Tiptronic control module for short circuit to ground	♦ Switch off ignition ♦ Measure resistance between Tiptronic control module plug pin H and ground	∞ Ω ⇒ Step 4	Short circuit to ground in the CAN wiring harness between Tiptronic control module plug pin H and DME control module plug pin B4

Work instruction			Display OK	If not OK
4	Check CAN bus between DME control module and Tiptronic control module for short circuit to ground	♦ Measure resistance between Tiptronic control module plug pin L and ground	∞ Ω ⇒ Step 5	Short circuit to ground in the CAN wiring harness between Tiptronic control module plug pin L and DME control module plug pin B3
5	Check CAN bus between DME control module and Tiptronic control module for short circuit	♦ Measure resistance between Tiptronic control module plug pin H and pin L	∞ Ω ⇒ Step 6	Short circuit in the CAN wiring harness between Tiptronic control module plug pin H and pin L and DME control module plug pin B3 and B4 → End
6	Check CAN bus between DME control module, instrument cluster, PSM control module and PSM steering-angle sensor for short circuit to voltage	♦ Pull off the following plugs: PSM control module plug, PSM steering-angle sensor plug and instrument cluster control module plug ♦ Switch on ignition ♦ Measure voltage between DME control module plug pin D36 and ground	< 0.3 V ⇒ Step 7	Short circuit to voltage in CAN wiring harness between DME control module plug pin D36, instrument cluster plug pin A15, PSM control module plug pin A24 and PSM steering-angle plug pin A2 → End
7	Check CAN bus between DME control module, instrument cluster, PSM control module and PSM steering-angle sensor for short circuit to voltage	♦ Measure voltage between DME control module plug pin D37 and ground	< 0.3 V ⇒ Step 8	Short circuit to voltage in CAN wiring harness between DME control module plug pin D37, instrument cluster plug pin A31, PSM control module plug pin A40 and PSM steering-angle plug pin A1 → End

Work instruction			Display OK	If not OK
8	Check CAN bus between DME control module, instrument cluster, PSM control module and PSM steering-angle sensor for short circuit to ground	♦ Switch off ignition ♦ Measure resistance between DME control module plug pin D37 and ground	∞ Ω ⇒ Step 9	Short circuit to ground in CAN wiring harness between DME control module plug pin D37, instrument cluster plug pin A31, PSM control module plug pin A40 and PSM steering-angle plug pin A1 → End
9	Check CAN bus between DME control module, instrument cluster, PSM control module and PSM steering-angle sensor for short circuit to ground	♦ Measure resistance between DME control module plug pin D36 and ground	∞ Ω ⇒ Step 10	Short circuit to ground in CAN wiring harness between DME control module plug pin D36, instrument cluster plug pin A15, PSM control module plug pin A24 and PSM steering-angle plug pin A2 → End
10	Check CAN bus between DME control module, instrument cluster, PSM control module and PSM steering-angle sensor for short circuit	♦ Measure resistance between DME control module plug pin D36 and DME control module plug pin D37	∞ Ω ⇒ Step 11	Short circuit in CAN wiring harness → End
11	Check CAN bus between DME contol unit and PSM control unit for open circuit	♦ Measure resistance between DME control module plug pin D36 and PSM control module plug pin 24	< 5 Ω ⇒ Step 12	Open circuit in CAN wiring harness to the PSM control module → End
12	Check CAN bus between DME contol unit and PSM control unit for open circuit	♦ Measure resistance between DME control module plug pin D37 and PSM control module plug pin 40	< 5 Ω ⇒ Step 13	Open circuit in CAN wiring harness to the PSM control module → End
13	Check control units	♦ Push on all control module plugs ♦ Disconnect the control modules one after the other and check whether the "CAN data bus (drive)" fault has been remedied	Replace the last control module to be disconnected → End	

Fault code 5528

DME: non-conforming software version

Diagnostic conditions

- Ignition on
- Internal control module test
- Incorrect software ID received from the DME control module

Possible cause of fault

- Software error in DME control module

Affected terminals

-

Diagnosis/troubleshooting

Work instruction		Display OK	If not OK
1	See DME diagnosis	→ End	

Fault code 5529

Error in CAN message from Tiptronic

Diagnostic conditions

- Engine running
- Fault is sent by the Tiptronic control module via the CAN (incorrect states)

Possible cause of fault

♦ Fault in the Tiptronic

Affected terminals

-

Diagnosis/troubleshooting

Work instruction		Display OK	If not OK
1	See Tiptronic diagnosis	→ End	

Fault code 5540

DME: fault stored in ECM

Diagnostic conditions

- Ignition on
- Internal control module test
- DME fault memory contains a fault

Possible cause of fault

- Fault in DME

Affected terminals

-

Diagnosis/troubleshooting

Work instruction		Display OK	If not OK
1	See DME diagnosis	→ End	

Convertible top V04

Introduction

911 Turbo (996) as of model year 2004

System V 04

General instructions/safety instructions

The following points must be observed during vehicle diagnosis:

- When replacing the convertible top control module, the coding must be performed correctly and the convertible top is to be recalibrated. (See ⇒ chapter "Replace control module" in **61-5**)

After troubleshooting or repairs:

- Delete fault memory with the 9588 Porsche System Tester II,
- Completely open and close convertible top 3 times using the convertible top switch, remote control (not USA) or comfort opening/closing function,
- Carry out a test drive and completely open and close the convertible top 3 times,
- Read out fault memory again with the 9588 Porsche System Tester II,
- Rectify entered faults if necessary,
- Reset warning lights (See ⇒ chapter "Reset warning light" in **61-5**).

Caution!

Danger of damage due to improper handling of batteries and control module plug connections!

- ***Disconnect the battery connection terminals only when the engine is switched off!***
- ***Start the engine only when the battery connection terminals are properly connected!***
- ***Pull off or push on plug connections for the control modules or other electronic components only when the ignition is switched off!***
- ***Disconnect the negative terminal of the battery before welding work on the vehicle.***

General information about the fault memory

- The contents of the fault memory are retained even when the unit is removed.

Diagnostic conditions

The fault can only be identified if the requirements listed under 'Diagnostic condition' in troubleshooting are met. For this reason, the specified procedure must be observed after a fault is repaired:

1. Clear fault memory.
2. Satisfy the requirements listed under 'Diagnostic conditions'.
3. Read out fault memory again

Possible causes of fault

The possible causes that may be responsible for the fault are listed here. Please note that in certain circumstances further faults can be stored in the fault memory after troubleshooting (e.g. if plugs are disconnected). After repairs using the automatic control module search have been made, read out the fault memory of all control modules and delete the faults entered as a result of the trouble-shooting and repairs.

Diagnosis/troubleshooting

- The errors entered are indicated using the Porsche fault code and as clear text.
- The fault memory Info key F8 on the 9588 Porsche System Tester IIcan be used to access the extended fault memory. This information should be saved using the F4 key and printed out. The following information can be displayed:

Fault status

The following status types are possible:

- available (at the time of the last diagnosis routine)
- not available (at the time of the last diagnosis routine)

Counter

- The counter is set to '50' the first time the fault occurs. (Fault present)

- If the fault occurs in each diagnostis routine (convertible top operation), the counter remains at '50'. (Fault present)
- If the fault has been detected following a diagnosis routine (convertible top operation) in which there were no faults present, the counter is increased by '1' each time.

Basic conditions

The switches that were recognised as being actuated in the last troubleshooting are displayed.

The following displays are possible but are not required:

- Closure locked
- Closure unlocked
- Convertible top raised
- Convertible-top compartment lid locked
- Side flap top right
- Side flap bottom right
- Side flap top left
- Side flap bottom left

Tools

Warning!

Danger of injury when driving and working on the vehicle!

- ***Never hang the 9588 Porsche System Tester II over the steering wheel!***
- ***Tools and special tools should in general be kept away from all airbag operating areas and the roll-over protection strap area.***

Note!

-
-
-

9588 Porsche System Tester II ►

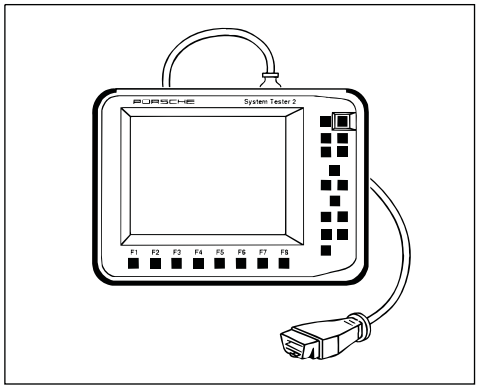

Commercially available digital multimeter ►

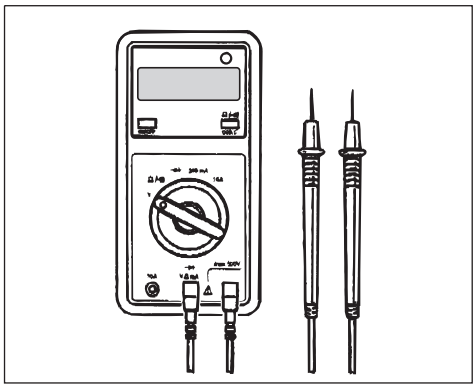

9616 88-pin test adapter cable

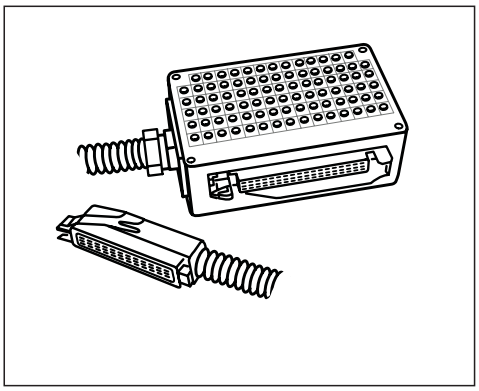

9636/1 Pin template

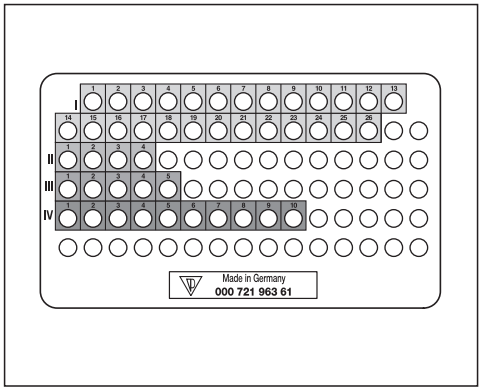

9636 45-pin test adapter

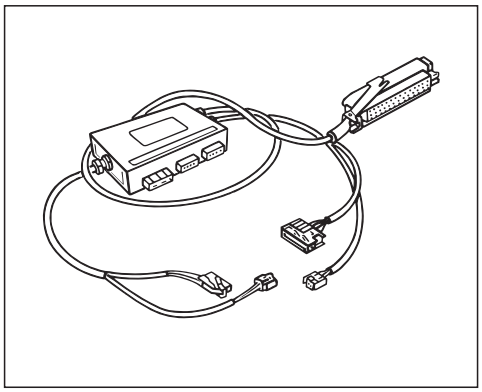

9684 Measurement tool set

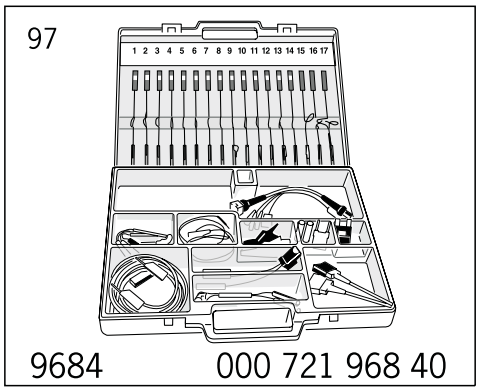

Component arrangement

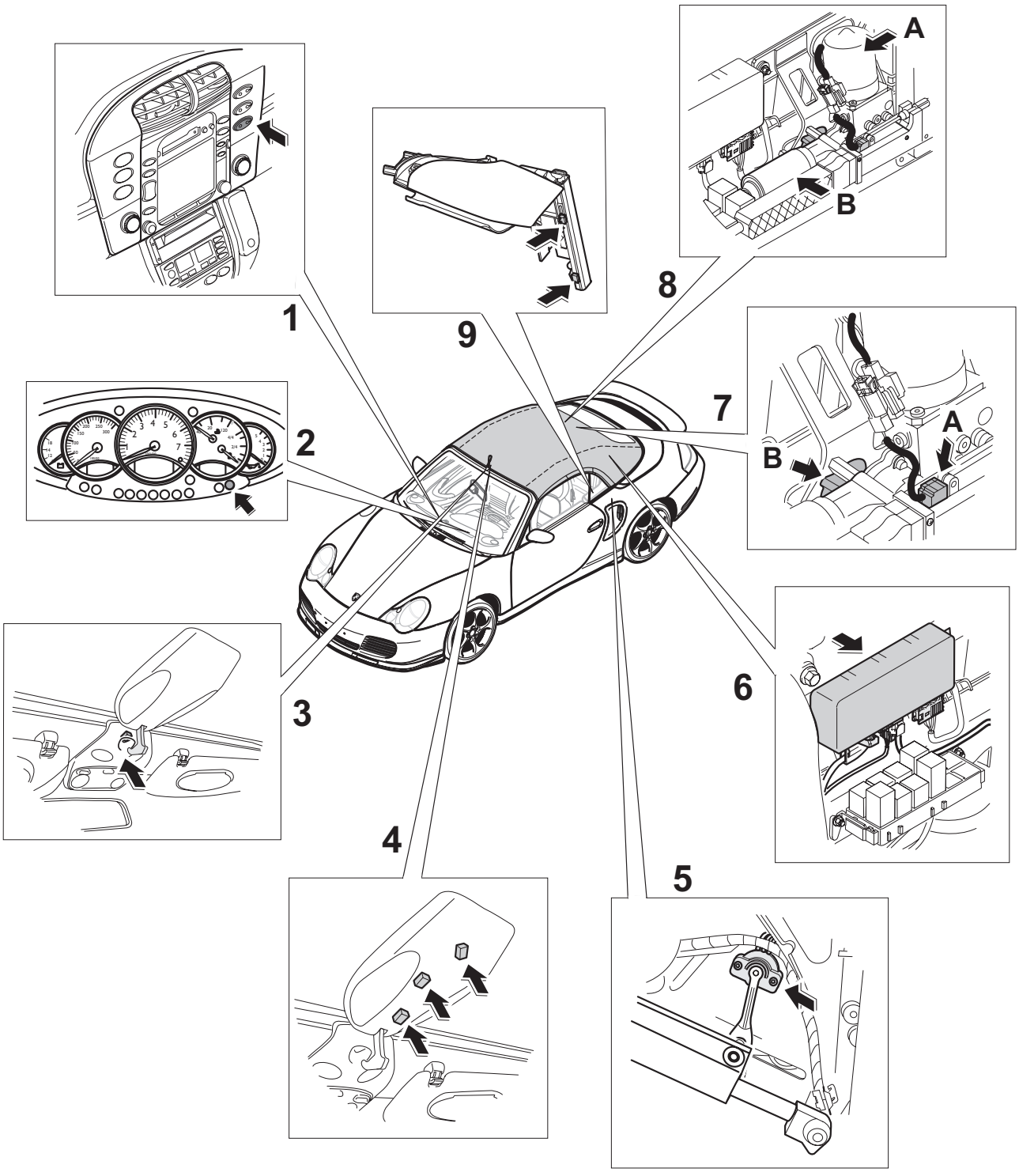

1 - Switch for roof
2 - Warning light for convertible top
3 - Microswitch for roof (windshield frame)
4 - Convertible top lock with 3 microswitches for motor (closure)
5 - Potentiometer (convertible top position)
6 - Convertible top control unit
7A - Microswitch (convertible-top compartment lid)
7B - Potentiometer (convertible-top compartment lid position)
8A - Hydraulic pump for convertible-top drive
8B - Motor for drive (convertible-top compartment lid)
9 - Microswitch flap - top and bottom, rear side panel left and right - (side flap)

Connector assignment

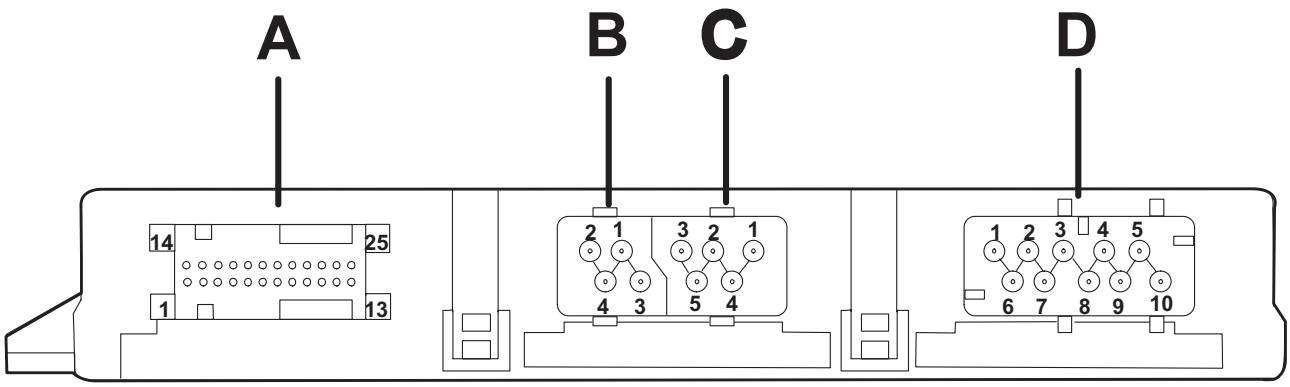

- Connector A

Pin	Designation	Pin	Designation
1	Switch for roof "Open" input (-)	2	Comfort opening Input from alarm system control module
3	Microswitch for roof (windscreen frame) Ground input (closed)	4	Not used
5	Microswitch for motor Ground input (convertible top locked)	6	Terminal 15 power supply for control module
7	Not used	8	Microswitch for rear cover Ground input (opened)
9	Microswitch for motor Ground input (convertible top raised)	10	Raise door windows Output at power window motor
11	Input for alarm system control module	12	Potentiometer (convertible top position) Output positive
13	Speed signal Input from instrument cluster	14	Switch for roof "Close" input (-)
15	Comfort closing Input from alarm system control module	16	Diagnosis K-line
17	Not used	18	Parking break switch Ground input (actuated)
19	Microswitch convertible-top compartment lid Ground input (locked)	20	Microswitch for motor Ground input (convertible top unlocked)
21	Potentiometer (convertible top position) Input signal	22	Lower door windows Output at power window motor
23	Warning light for convertible top Output at instrument cluster	24	Potentiometer (convertible top position) Ground output
25	Ground supply from ground point 8 for control module	26	Terminal 30 power supply for control module

- Connector B

Pin	Designation	Pin	Designation
1	Convertible top lock motor Lock output (+)	2	Convertible top lock motor Unlock output (+)
3	Ground supply from ground point 8 for motors	4	Terminal 30 power supply for motors

- Connector C

Pin	Designation	Pin	Designation
1	Potentiometer (convertible-top compartment lid position) Output positive	2	Motor for drive (convertible-top compartment lid) "Close" output (+)
3	Potentiometer (convertible-top compartment lid position) Input signal	4	Motor for drive (convertible-top compartment lid) "Open" output (+)
5	Potentiometer (convertible-top compartment lid position) Ground output		

- Plug D

Pin	Designation	Pin	Designation
1	Hydraulic pump for convertible top drive "Open" output (+)	2	Motor for flap (right rear side panel) "Extend" output (+)
3	Motor for flap (left rear side panel) "Extend" output (+)	4	Motor for flap (left rear side panel) "Retract" output (+)
5	Motor for flap (right rear side panel) "Retract" output (+)	6	Hydraulic pump for convertible top drive "Close" output (+)
7	Microswitch top flap (right rear side panel) Ground input (extended)	8	Microswitch bottom flap (right rear side panel) Ground input (retracted)
9	Microswitch top flap (left rear side panel) Ground input (extended)	10	Microswitch bottom flap (left rear side panel) Ground input (retracted)

Control module function

Requirements

The following conditions must be satisfied in order to carry out one of the tester functions:

- Parking brake is engaged
- Vehicle speed 0 $^{km}/_{h}$ (0 mph)
- Rear lid (engine compartment) closed
- Roll-over protection strap retracted
- Ignition on
- Communication established with the 9588 Porsche System Tester II

Replace control module

Caution!

Risk of damage due to corrosion in the plug connections!

♦ ***Protect the plug connections from moisture and liquids!***

The following points are to be observed if the control module needs to be replaced:

1. The appropriate settings must be coded for the control module (See ⇒ "Coding" in **61-5** page 1)!
2. The potentiometers must be calibrated in the new control module (See ⇒ "Calibration" in **61-5** page 2)!

Coding

Note!

1. Using the 9588 Porsche System Tester II, select the menu item 'Coding'.
2. The Tester displays the current coding as follows:

'Model year '	'up to 2002'or 'as of 2003'

3. The display can be saved using the F4 key.
4. Using the ↑ and ↓ keys, select the coding option 'model year' and continue with the key F8.
5. Using the ↑ and ↓ keys, select the model year of the vehicle 'up to 2002' or 'as of 2003'.
6. Code the input by pressing the F8 key and wait until the display 'Coding modified' appears.
7. The display can be saved using the F4 key.
8. End the procedure with the << key.

Calibration

The convertible top control module must be recalibrated after replacing the potentiometer, parts of the convertible top or after carrying out adjustment work on the convertible top.

Warning!

Serious injuries or damages could occur due to the automatic movement sequence of the convertible top during calibration!

- ***Ensure that you and other individuals maintain a safe distance from the moving parts of the convertible top, convertible-top compartment lid and windows!***
- ***Ensure that objects are kept away from the moving areas of the convertible top, convertible-top compartment lid and windows!***

Note!

-
-
-
-

1. Using the 9588 Porsche System Tester II, select the menu item 'Calibration'.

Note!

-
- F8
- F7
- <<

2. Start calibration with the F7 key.
3. The entire convertible top mechanism moves until the convertible top is completely open in the end position.
4. After it has reached its final position, the following text appears: 'Calibration successful! Display fault memory with the [> >] key. '.
5. Call up fault memory with the >> key.
6. End the procedure with the << key.
7. Rectify any existing faults if necessary.

Reset actuation counter 2

Note!

-
-

1. Using the 9588 Porsche System Tester II, select the menu item 'Actuation counter 2'.
2. Press the F7 'Yes' key and confirm by pressing the >> key.
3. The text 'Actuation counter 2 deleted' appears in the function selection header.

Reset warning light

Note!

1. Using the 9588 Porsche System Tester II, select the menu item 'Reset warning light'.
2. The text 'Warning light reset' appears in the function selection header.

Fault overview

Fault code	Fault text	Fault effect
1	Switch position implausible	♦ Warning light flashes ♦ Convertible top does not function
2	Switch short circuit to ground	♦ Warning light flashes ♦ Convertible top does not function
3	Convertible top pot. fault	♦ Warning light flashes ♦ Convertible top does not function
4	Convertible-top compartment lid pot. fault	♦ Warning light flashes ♦ Convertible top does not function
5	Timeout error	♦ Warning light flashes ♦ Convertible top does not function
6	Calibration required	♦ Warning light flashes ♦ Convertible top does not function in the usual manner
7	Supply voltage	♦ Warning light flashes ♦ Convertible top does not function

Fault code 1

Switch position implausible

Diagnostic conditions

- Open convertible top completely and close it again

Possible cause of fault

- Short circuit to ground or in the wiring between the microswitches and the control module for the convertible top
- Both microswitches for locking and unlocking motor (closure) are actuated
- Both upper and lower microswitches for right flap (side flap) are actuated
- Both upper and lower microswitches for left flap (side flap) are actuated
- Microswitch (convertible-top compartment lid) faulty
- Convertible top control module defective

Affected pins

Plug A, pin 3, pin 5, pin 9 pin 19 and pin 20

Plug D, pin 7, pin 8 pin 9 and pin 10

Diagnosis/troubleshooting

Caution!

Risk of damage to convertible top parts and tools due to improperly installed and secured parts and tools!

- ***Attach test adapter with cables and convertible top control module in the vehicle in such a way that when the convertible top mechanism is opened or closed, nothing is brushed against or trapped and the mechanism can move freely!***

Note!

-

♦

Note!

♦

♦

♦

♦

♦

♦

Work instruction			Display OK	If not OK
1	Check extended fault memory	♦ Using the 9588 Porsche System Tester II, select the extended fault memory in the menu item Fault memory by pressing F8	• None of the following combinations is displayed: ♦ 'Closure locked' and 'closure unlocked' ♦ 'Side flap top right' and 'side flap bottom right' ♦ 'Side flap top left' and 'side flap bottom left' ⇒ Step 2	• The basic conditions indicate: 'Closure locked' and 'closure unlocked' ⇒ Step 17 • The basic conditions indicate: 'Side flap top right' and 'side flap bottom right' ⇒ Step 20 • The basic conditions indicate: 'Side flap top left' and 'side flap bottom left' ⇒ Step 25

Work instruction			Display OK	If not OK
2	Preparatory work for steps 3 to 10: ♦ Ignition on ♦ Close convertible top completely until it has reached its final position ♦ Connect 9588 Porsche System Tester II and call up the Input signals menu Select and call up the following 9 input signals: ♦ 'Closure locked' ♦ 'Closure unlocked' ♦ 'Convertible Top' ♦ 'Convertible-top compartment lid' ♦ 'Side flap top right' ♦ 'Side flap bottom right' ♦ 'Side flap top left' ♦ 'Side flap bottom left' ♦ 'Latching hook'		⇒ Step 3	
3	Check closure input signals when convertible top is closed	♦ Check switch positions for 'closure locked' and 'closure unlocked'	• Switch positions indicate: 'Closure locked' (switch closed) and 'closure not unlocked' (switch open) ⇒ Step 4	• Switch positions indicate: 'Closure locked' (switch closed) and 'closure unlocked' (switch closed) ⇒ Step 17
4	Check right side flap input signals when convertible top is closed	♦ Check switch positions of flap 'side flap top right' and 'side flap bottom right'	• Switch positions indicate: 'Side flap not top right' (switch open) and 'and side flap bottom right' (switch closed) ⇒ Step 5	• Switch positions indicate: 'Side flap top right' (switch closed) and 'side flap bottom right' (switch closed) ⇒ Step 20
5	Check left side flap input signals when convertible top is closed	♦ Check switch positions of flap 'side flap top left' and 'side flap bottom left'	• Switch positions indicate: 'Side flap left not top' (switch open) and 'side flap bottom left' (switch closed) ⇒ Step 6	• Switch positions indicate: 'Side flap top left' (switch closed) and 'side flap bottom left' (switch closed) ⇒ Step 25

Work instruction			Display OK	If not OK
6	Check convertible-top compartment lid input signal when convertible top is closed	♦ Check switch position of 'convertible-top compartment lid'	• Switch positions indicate: 'Convertible-top compartment lid locked' (switch open) ⇒ Step 7	• Switch positions indicate: 'Convertible-top compartment lid unlocked' (switch closed) ⇒ Step 30
7	Check convertible top and latching hook input signals when convertible top is closed	♦ Check switch positions for 'convertible top' and 'latching hooks'	• Switch positions indicate: 'Convertible top not raised' (switch open) and 'latching hooks actuated'(switch open) ⇒ Step 8	• Switch positions indicate: 'Convertible top raised' (switch closed) ⇒ Step 32 • Switch positions indicate: 'Latching hooks not actuated' (switch closed) ⇒ Step 36
8	Check closure input signals when convertible top is opened	♦ Open convertible top completely until it has reached its final position ♦ Check switch positions for 'closure locked' and 'closure unlocked'	• Switch positions indicate: 'Closure locked' (switch closed) and 'closure not unlocked' (switch open) ⇒ Step 9	• Switch positions indicate: 'Closure locked' (switch closed) and 'closure unlocked' (switch closed) ⇒ Step 17
9	Check right side flap input signals when convertible top is opened	♦ Check switch positions of flap 'side flap top right' and 'side flap bottom right'	• Switch positions indicate: 'Side flap top right' (switch closed) and 'side flap right not bottom' (switch open) ⇒ Step 10	• Switch positions indicate: 'Side flap top right' (switch closed) and 'side flap bottom right' (switch closed) ⇒ Step 20
10	Check left side flap input signals when convertible top is opened	♦ Check switch positions of flap 'side flap top left' and 'side flap bottom left'	• Switch positions indicate: 'Side flap top left' (switch closed) and 'side flap left not bottom' (switch open) ⇒ Step 11	• Switch positions indicate: 'Side flap top left' (switch closed) and 'side flap bottom left' (switch closed) ⇒ Step 25

Work instruction			Display OK	If not OK
11	Check convertible-top compartment lid input signal when convertible top is opened	♦ Check switch position of 'convertible-top compartment lid'	• Switch positions indicate: 'Convertible-top compartment lid locked' (switch open) ⇒ Step 12	• Switch positions indicate: 'Convertible-top compartment lid unlocked' (switch closed) ⇒ Step 30
12	Check convertible top and latching hook input signals when convertible top is opened	♦ Check switch positions for 'convertible top' and 'latching hooks'	• Switch positions indicate: 'Convertible top raised' (switch closed) and 'latching hooks not actuated' (switch closed) ⇒ Step 13	• Switch positions indicate: 'Convertible top not raised' (switch open) ⇒ Step 33 • Switch positions indicate: 'Latching hooks actuated' (switch open) ⇒ Step 37
13	Preparatory work for step 14: ♦ Ignition on ♦ Connect 9588 Porsche System Tester II and call up the data logger in the Input signals menu Select and call up the following 4 input signals: ♦ 'Closure locked' ♦ 'Closure unlocked' ♦ 'Convertible Top' ♦ 'Convertible-top compartment lid'		⇒ Step 14	
14	Check switch characteristics for 'closure locked', 'closure unlocked', 'convertible top' and 'convertible-top compartment lid' while opening and closing	♦ Close convertible top completely until it has reached its final position and open it again ♦ Observe the switching lines in the process ♦ Repeat the process if necessary	All switching lines have a continuous path (similar to that illustrated in the figure below) ⇒ Step 15	One or more switching lines indicate unusual deflections (peaks or similar deviations): • in the input signals 'closure locked' or 'closure unlocked' or 'convertible top' ⇒ Step 40 • in the input signal 'convertible-top compartment lid' ⇒ Step 41

Note!

-
-

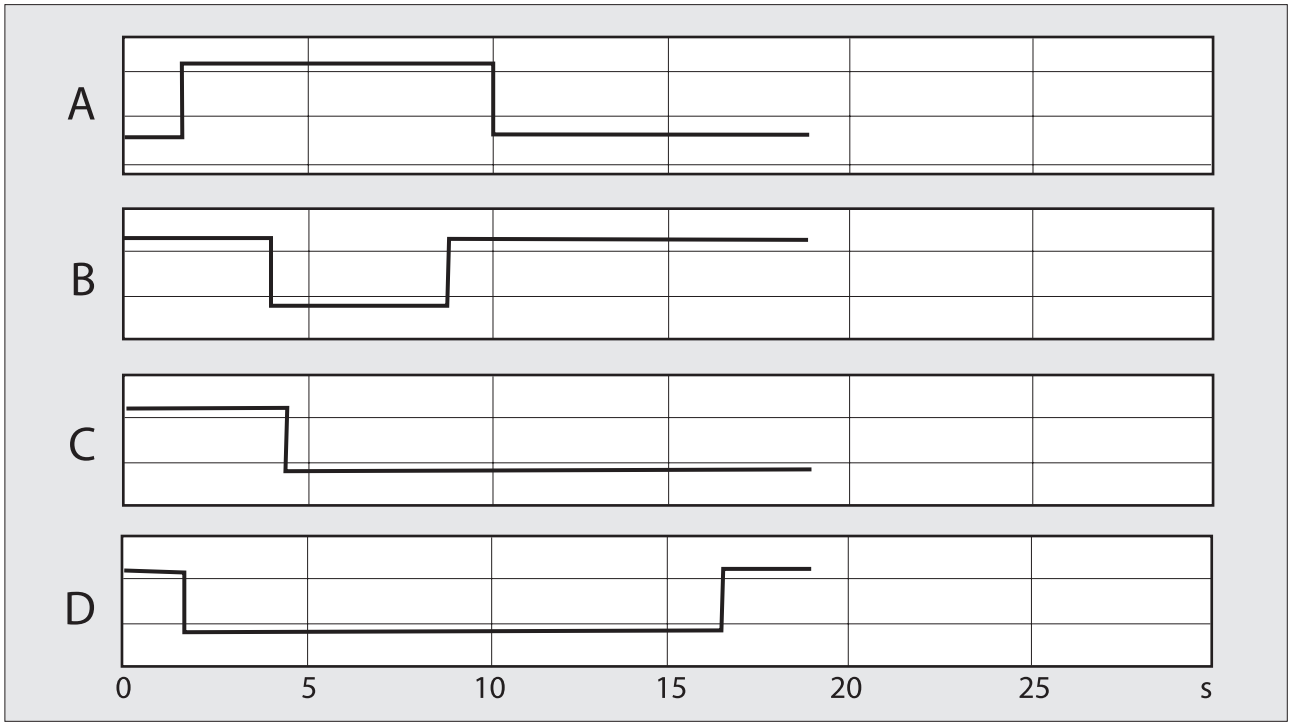

A - Closure locked

B - Closure unlocked

C - Convertible top

D - Convertible-top compartment lid

Work instruction		Display OK	If not OK
15	Preparatory work for step 16: delete existing input signals in data logger, then select and call up the following 4 input signals: ♦ 'Side flap top right' ♦ 'Side flap bottom right' ♦ 'Side flap top left' ♦ 'Side flap bottom left'	⇒ Step 16	

Work instruction			Display OK	If not OK
16	Check switch characteristics of both side flaps while opening and closing	♦ Close convertible top completely until it has reached its final position and open it again ♦ Observe the switching lines in the process ♦ Repeat the process if necessary	All switching lines have a continuous path (similar to that illustrated in the figure below) ⇒ Step 49	One or more switching lines indicate unusual deflections (peaks or similar deviations) ⇒ Step 41

Note!

♦

♦

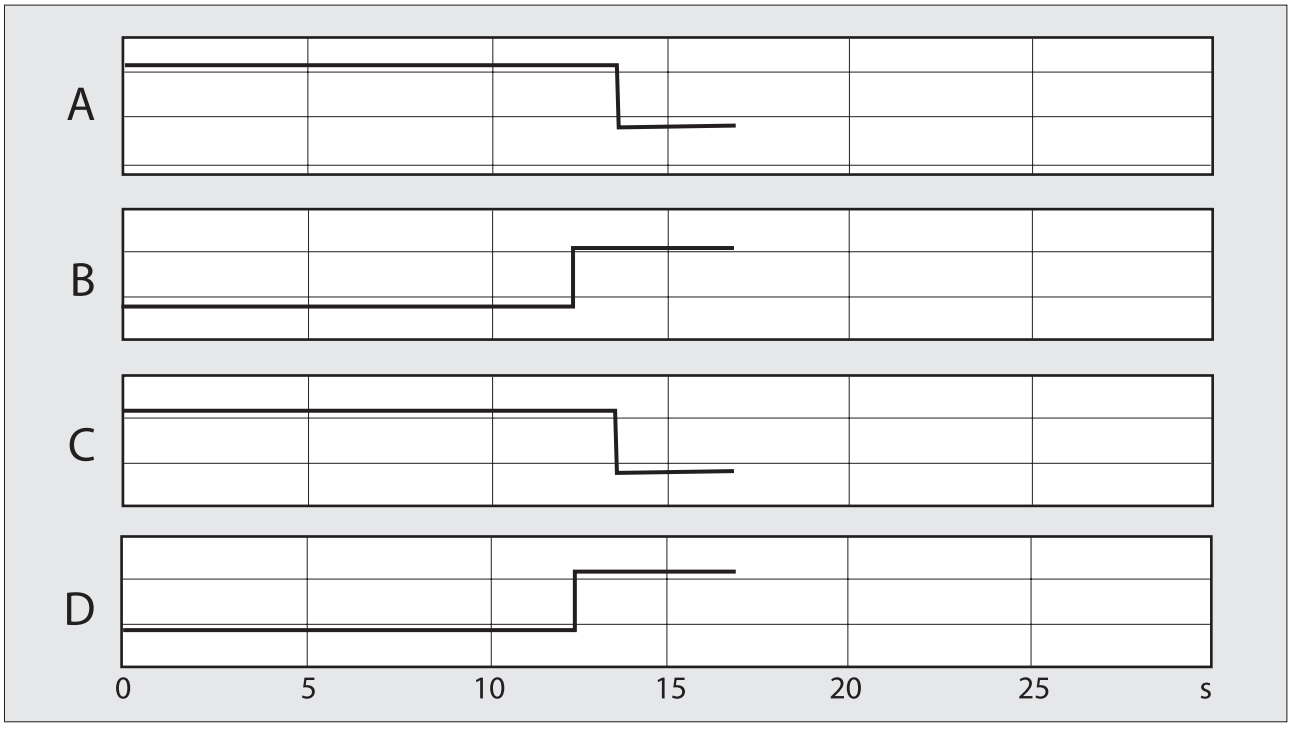

A - Side flap top right

B - Side flap bottom right

C - Side flap top left

D - Side flap bottom left

Work instruction			Display OK	If not OK
17	Check input signals from microswitch for motor 'closure locked' and 'closure unlocked' on the convertible top control module	♦ Ignition off ♦ Pull off plug A on convertible top control module ♦ Measure the resistance between plug A pin 5 and ground	< 5 Ω	⇒ Step 18
		♦ Measure the resistance between plug A pin 20 and ground	∞ Ω ⇒ Step 50	
18	Check wires between microswitch for motor and convertible top control module for short circuit to ground	♦ Ignition off ♦ Pull off microswitch connectors in convertible top lock ♦ Measure the resistance between convertible top control module plug A pin 5 and ground ♦ Measure the resistance between convertible top control module plug A pin 20 and ground	∞ Ω ⇒ Step 19	Repair wiring harness → End
19	Check wires between microswitch for motor and convertible top control module for short circuit	♦ Ignition off ♦ Measure the resistance between convertible top control module plug A pin 5 and pin 20 ♦ Measure the resistance between convertible top control module plug A pin 9 and pin 20 ♦ Measure the resistance between convertible top control module plug A pin 5 and pin 9	∞ Ω ⇒ Step 42	Repair wiring harness → End

Work instruction			Display OK	If not OK
20	Check input signals from microswitch flap 'side flap top right' and 'side flap bottom right' on the convertible top control module	♦ Move right side flap to an intermediate position in which it is neither up nor down ♦ Ignition off ♦ Pull off plug D on convertible top control module ♦ Measure the resistance between plug D pin 7 and ground	∞ Ω	⇒ Step 21
		♦ Measure the resistance between plug D pin 8 and ground	∞ Ω ⇒ Step 50	⇒ Step 23
21	Check wires between microswitch for flap 'side flap top right' and convertible top control module for short circuit to ground	♦ Ignition off ♦ Pull off microswitch connector for flap 'side flap top right' ♦ Measure the resistance between convertible top control module plug D pin 7 and ground	∞ Ω ⇒ Step 22	Repair wiring harness → End
22	Check wires between microswitches for flap 'side flap right' and convertible top control module for short circuit	♦ Ignition off ♦ Measure the resistance between convertible top control module plug D pin 7 and pin 8	∞ Ω ⇒ Step 43	Repair wiring harness → End
23	Check wires between microswitch for flap 'side flap bottom right' and convertible top control module for short circuit to ground	♦ Ignition off ♦ Pull off microswitch connector for flap 'side flap bottom right' ♦ Measure the resistance between convertible top control module plug D pin 8 and ground	∞ Ω ⇒ Step 24	Repair wiring harness → End
24	Check wires between microswitches for flap 'side flap right' and convertible top control module for short circuit	♦ Ignition off ♦ Measure the resistance between convertible top control module plug D pin 7 and pin 8	∞ Ω ⇒ Step 44	Repair wiring harness → End

Work instruction			Display OK	If not OK
25	Check input signals from microswitch flap 'side flap top left' and 'side flap bottom left' on the convertible top control module	♦ Move left side flap to an intermediate position in which it is neither up nor down ♦ Ignition off ♦ Pull off plug D on convertible top control module ♦ Measure the resistance between plug D pin 9 and ground	∞ Ω	⇒ Step 26
		♦ Measure the resistance between plug D pin 10 and ground	∞ Ω ⇒ Step 50	⇒ Step 28
26	Check wires between microswitch for flap 'side flap top left' and convertible top control module for short circuit to ground	♦ Ignition off ♦ Pull off microswitch connector for flap 'side flap top left' ♦ Measure the resistance between convertible top control module plug D pin 9 and ground	∞ Ω ⇒ Step 27	Repair wiring harness → End
27	Check wires between microswitches for flap 'side flap left' and convertible top control module for short circuit	♦ Ignition off ♦ Measure the resistance between convertible top control module plug D pin 9 and pin 10	∞ Ω ⇒ Step 45	Repair wiring harness → End
28	Check wires between microswitch for flap 'side flap top left' and convertible top control module for short circuit to ground	♦ Ignition off ♦ Pull off microswitch connector for flap 'side flap top left' ♦ Measure the resistance between convertible top control module plug D pin 10 and ground	∞ Ω ⇒ Step 29	Repair wiring harness → End
29	Check wires between microswitches for flap 'side flap left' and convertible top control module for short circuit	♦ Ignition off ♦ Measure the resistance between convertible top control module plug D pin 9 and pin 10	∞ Ω ⇒ Step 46	Repair wiring harness → End

Work instruction			Display OK	If not OK
30	Check input signal from microswitch 'convertible-top compartment lid' on convertible top control module	♦ Ignition off ♦ Pull off plug A on convertible top control module ♦ Measure the resistance between plug A pin 19 and ground	∞ Ω ⇒ Step 50	⇒ Step 31
31	Check wire beween microswitch 'convertible-top compartment lid locked' and convertible top control module for open circuit	♦ Ignition off ♦ Pull off microswitch connector 'convertible-top compartment lid locked' ♦ Measure resistance between convertible top control module plug A pin 19 and microswitch connector 'convertible-top compartment lid locked'	< 5 Ω ⇒ Step 47	Repair wiring harness → End
32	Check input signal from microswitch 'convertible top' on convertible top control module	♦ Ignition off ♦ Pull off plug A on convertible top control module ♦ Measure the resistance between plug A pin 9 and ground	∞ Ω ⇒ Step 50	⇒ Step 34
33	Check input signal from microswitch 'convertible top' on convertible top control module	♦ Ignition off ♦ Pull off plug A on convertible top control module ♦ Measure the resistance between plug A pin 9 and ground	< 5 Ω ⇒ Step 50	⇒ Step 34
34	Check wire between microswitch 'convertible top' and convertible top control module for short circuit to ground	♦ Ignition off ♦ Pull off microswitch connector'convertible top' ♦ Measure the resistance between convertible top control module plug A pin 9 and ground	∞ Ω ⇒ Step 35	Repair wiring harness → End

Work instruction			Display OK	If not OK
35	Check wire between microswitch 'convertible top' and convertible top control module for open circuit	♦ Ignition off ♦ Pull off microswitch connector'convertible top' ♦ Measure resistance between convertible top control module plug A pin 9 and microswitch connector 'convertible top'	< 5 Ω ⇒ Step 42	Repair wiring harness → End
36	Check input signal from microswitch 'latching hook' on convertible top control module	♦ Ignition off ♦ Pull off plug A on convertible top control module ♦ Measure the resistance between plug A pin 3 and ground	∞ Ω ⇒ Step 50	⇒ Step 38
36	Check input signal from microswitch 'latching hook' on convertible top control module	♦ Ignition off ♦ Pull off plug A on convertible top control module ♦ Measure the resistance between plug A pin 3 and ground	< 5 Ω ⇒ Step 50	⇒ Step 38
38	Check wire between microswitch 'latching hook' and convertible top control module for short circuit to ground	♦ Ignition off ♦ Pull off microswitch connector 'latching hook' ♦ Measure the resistance between convertible top control module plug A pin 3 and ground	∞ Ω ⇒ Step 39	Repair wiring harness → End
39	Check wire between microswitch 'latching hook' and convertible top control module for open circuit	♦ Ignition off ♦ Pull off microswitch connector 'latching hook' ♦ Measure resistance between convertible top control module plug A pin 3 and microswitch connector 'convertible top'	< 5 Ω ⇒ Step 48	Repair wiring harness → End
40	♦ Repair 'convertible top' wiring harness		→ End	
41	♦ Repair 'rear' wiring harness		→ End	

Work instruction		Display OK	If not OK
42	♦ Replace microswitch for motor in convertible top lock	→ End	
43	♦ Replace flap microswitch for 'side flap top right'	→ End	
44	♦ Replace flap microswitch for 'side flap bottom right'	→ End	
45	♦ Replace flap microswitch for 'side flap top left'	→ End	
46	♦ Replace flap microswitch for 'side flap bottom left'	→ End	
47	♦ Replace microswitch 'convertible-top compartment lid locked'	→ End	
48	♦ Replace microswitch 'latching hook'	→ End	
49	♦ Recalibrate convertible top ♦ Erase fault memory ♦ Completely open and close convertible top 3 times ♦ Read out fault memory again	Fault code 1 is not entered → End	Fault code 1 has been entered again ⇒ Step 50
50	♦ Replace convertible top control module	→ End	

Fault code 2

Switch short circuit to ground

The fault is entered if the signals 'open' and 'close' are present simultaneously in the convertible top control module.

Diagnostic conditions

- Use convertible top switch, remote control and comfort opening/closing function separately to 'open' and 'close' convertible top once

Possible cause of fault

- Short circuit to ground or in wires between convertible top control module and convertible top switch or alarm system control module
- Convertible top switch defective
- Convertible top control module defective
- Fault in alarm system

Affected pins

Plug A, pin 1, pin 2, pin 14 and pin 15

Diagnosis/troubleshooting

Work instruction			Display OK	If not OK
1	Check input signals for convertible top switch	♦ Ignition on ♦ Connect 9588 Porsche System Tester II and call up the Input signals menu ♦ Check position of 'convertible-top button'	'Convertible-top button not actuated' is displayed (both input signals indicate open) ⇒ Step 2	• Input signal indicates '"open convertible top" button actuated' (input signal indicates upward and closed) ⇒ Step 4 • Input signal indicates '"close convertible top" button actuated' (input signal indicates downward and closed) ⇒ Step 6

Work instruction			Display OK	If not OK
2	Check input signal 'open' on convertible top control module using alarm system control module	♦ Ignition off ♦ Pull off plugs A and B on convertible top control module ♦ Measure voltage between plug A pin 2 and plug B pin 4 (terminal 30) ♦ Operate remote control for opening convertible top and release ♦ Insert vehicle key in lock barrel on the driver's side ♦ Use the key to turn the lock barrel to "open", hold approximately 2 seconds and release	• Remote control not operated or lock barrel not turned < 0.3 V • Remote control activated to "open" or lock cylinder turned to "open" approx. 9 V to 10 V ⇒ Step 3	⇒ Step 9
3	Check input signal 'close' on convertible top control module using alarm system control module	♦ Ignition off ♦ Measure voltage between plug A pin 15 and plug B pin 4 (terminal 30) ♦ Use the key to turn the lock barrel to "close", hold approximately 2 seconds and release ♦ Remove vehicle key from lock barrel on the driver's side ♦ Operate remote control for closing convertible top and release	• Remote control not operated or lock barrel not turned < 0.3 V • Remote control activated to "open" or lock cylinder turned to "open" > 11 V ⇒ Step 13	⇒ Step 9
4	Check convertible top switch input signal 'open' on convertible top control module	♦ Ignition off ♦ Pull off plug A on convertible top control module ♦ Measure the resistance between plug A pin 1 and ground ♦ Operate convertible top switch 'open' and release	• Convertible top switch 'open' actuated < 5 Ω • Convertible top switch 'open' not actuated ∞ Ω ⇒ Step 13	⇒ Step 5

Work instruction			Display OK	If not OK
5	Check wire between convertible top switch 'open' and convertible top control module for short circuit to ground	♦ Ignition off ♦ Pull off plug on convertible top switch ♦ Measure resistance between plug A pin 1 and switch plug pin 2	< 5 Ω ⇒ Step 8	Repair wiring harness → End
6	Check convertible top switch input signal 'close' on convertible top control module	♦ Ignition off ♦ Pull off plug A on convertible top control module ♦ Measure the resistance between plug A pin 1 and ground ♦ Operate convertible top switch 'open' and release	• Convertible top switch 'open' actuated < 5 Ω • Convertible top switch 'open' not actuated ∞ Ω ⇒ Step 13	⇒ Step 7
7	Check wire between convertible top switch 'close' and convertible top control module for short circuit to ground	♦ Ignition off ♦ Pull off plug on convertible top switch ♦ Measure resistance between plug A pin 1 and switch plug pin 2	< 5 Ω ⇒ Step 8	Repair wiring harness → End
8	Check wires between convertible top switch and convertible top control module for short circuit	♦ Ignition off ♦ Measure resistance between plug A pin 1 and pin 14	∞ Ω ⇒ Step 11	Repair wiring harness → End
9	Check wires between alarm for motor and convertible top control module for short circuit to ground	♦ Ignition off ♦ Pull off plug A on alarm system control module ♦ Measure resistance between convertible top control module plug A pin 2 and ground ♦ Measure resistance between convertible top control module plug A pin 15 and ground	∞ Ω ⇒ Step 10	Repair wiring harness → End

Work instruction			Display OK	If not OK
10	Check wires between alarm system control module and convertible top control module for short circuit	♦ Ignition off ♦ Measure the resistance between convertible top control module plug A pin 2 and pin 15	∞ Ω ⇒ Step 12	Repair wiring harness → End
11	♦ Replace convertible top switch		→ End	
12	♦ Incorrect signals from alarm system control module		⇒ See alarm system diagnosis	
13	♦ Replace convertible top control module		→ End	

Fault code 3

Convertible top pot. fault

This fault is entered if the signal input voltage is not within the normal voltage range of 0.5 V to 4.4 V three times in succession.

Diagnostic conditions

- Completely open and close convertible top 3 times

Possible cause of fault

- Short circuit to positive, earth or in the wiring between convertible top control module and potentiometer (convertible top position)
- Potentiometer (convertible top position) faulty
- Convertible top control module defective

Affected pins

Plug A, pin 12, pin 21 and pin 24

Diagnosis/troubleshooting

Work instruction			Display OK	If not OK
1	Preparatory work for step 2: • Ignition on • Connect 9588 Porsche System Tester II and call up the data logger in the Actual values menu • Select and call up actual value 'Pot. 1 convertible top'		⇒ Step 2	
2	Check voltage characteristic from 'Pot. 1 convertible top' while opening and closing	• Close convertible top completely until it has reached its final position and open it again • Observe the voltage characteristic in the process • Repeat the process if necessary	The voltage characteristic has a continuous path (similar to that illustrated in the figure below) ⇒ Step 3	The voltage characteristic indicates unusual deflections (peaks or similar deviations) ⇒ Step 7

Note!

-
-

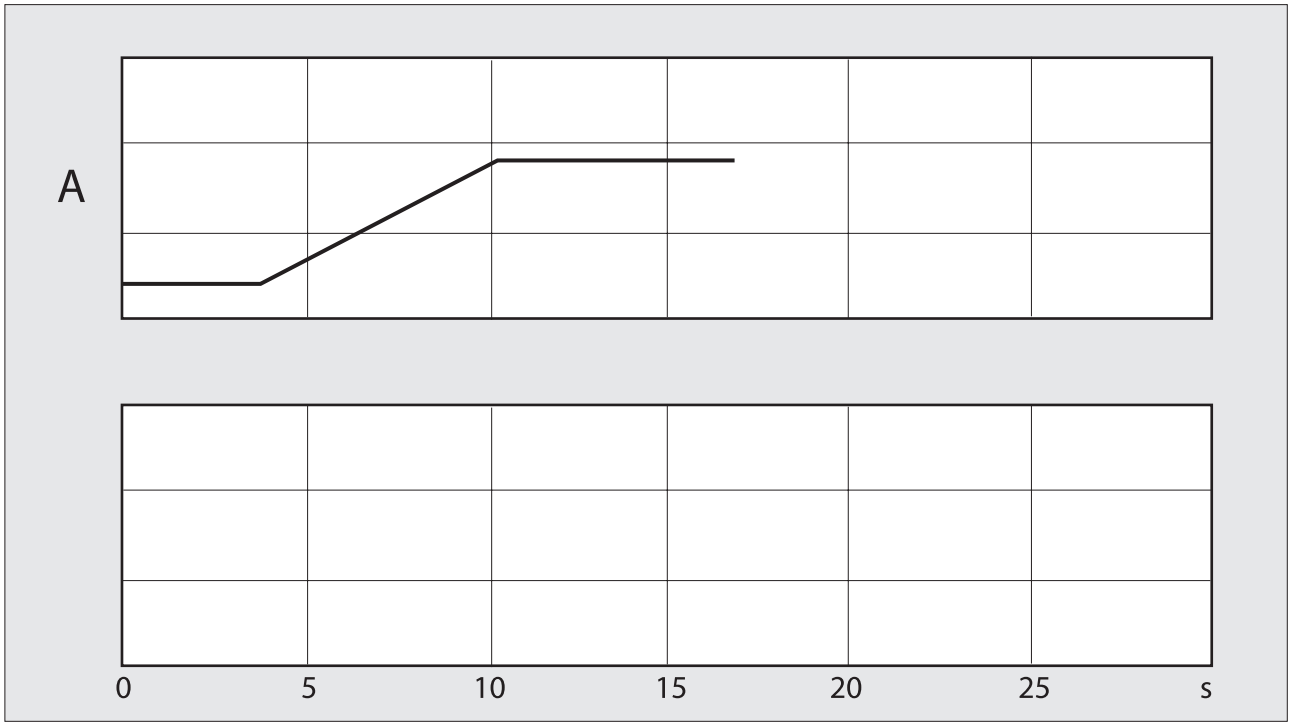

A - Pot. 1, convertible top

Work instruction		Display OK	If not OK
3	♦ Calibrate convertible top using 9588 Porsche System Tester II ♦ Erase fault memory ♦ Completely open and close convertible top 3 times ♦ Read out fault memory again	Fault code 3 not stored → End	Fault code 3 stored ⇒ Step 4

Work instruction			Display OK	If not OK
4	Check wires between potentiometer (convertible top position) and convertible top control module for short circuit to positive	♦ Ignition off ♦ Pull off plug A on convertible top control module ♦ Pull off plug from potentiometer (convertible top position) ♦ Ignition on ♦ Measure voltage between plug A pin 12 and ground ♦ Measure voltage between plug A pin 21 and ground ♦ Measure voltage between plug A pin 24 and ground	< 0.3 V ⇒ Step 5	Repair wiring harness → End
5	Check wires between potentiometer (convertible top position) and convertible top control module for short circuit to ground	♦ Ignition off ♦ Measure resistance between plug A pin 12 and ground ♦ Measure resistance between plug A pin 21 and ground ♦ Measure resistance between plug A pin 24 and ground	∞ Ω ⇒ Step 6	Repair wiring harness → End
6	Check wires between potentiometer (convertible top position) and convertible top control module for short circuit	♦ Ignition off ♦ Measure resistance between plug A pin 12 and pin 21 ♦ Measure resistance between plug A pin 12 and pin 24 ♦ Measure resistance between plug A pin 21 and pin 24	∞ Ω ⇒ Step 7	Repair wiring harness → End
7	♦ Replace potentiometer (convertible top position) ♦ Calibrate convertible top using 9588 Porsche System Tester II ♦ Erase fault memory ♦ Completely open and close convertible top 3 times ♦ Read out fault memory again		Fault code 3 not stored → End	Fault code 3 stored ⇒ Step 8
8	♦ Replace convertible top control module		→ End	

Fault code 4

Convertible-top compartment lid pot. fault

This fault is entered if the signal input voltage is not within the normal voltage range of 0.3 V to 4.7 V three times in succession.

Diagnostic conditions

- Completely open and close convertible top 3 times

Possible cause of fault

- Short circuit to positive, earth or in the wiring between convertible top control module and potentiometer (convertible-top compartment lid position)
- Potentiometer (convertible-top compartment lid position) faulty
- Convertible top control module defective

Affected pins

Plug C, pin 1, pin 3 and pin 5

Diagnosis/troubleshooting

Work instruction			Display OK	If not OK
1	Preparatory work for step 2: • Ignition on • Connect 9588 Porsche System Tester II and call up the data logger in the Actual values menu • Select and call up actual value 'Pot. 2 convertible-top compartment lid'		⇒ Step 2	
2	Check voltage characteristic from 'Pot. 2 convertible-top compartment lid' while opening and closing	• Close convertible top completely until it has reached its final position and open it again • Observe the voltage characteristic in the process • Repeat the process if necessary	The voltage characteristic has a continuous path (similar to that illustrated in the figure below) ⇒ Step 3	The voltage characteristic indicates unusual deflections (peaks or similar deviations) ⇒ Step 7

Note!

-
-

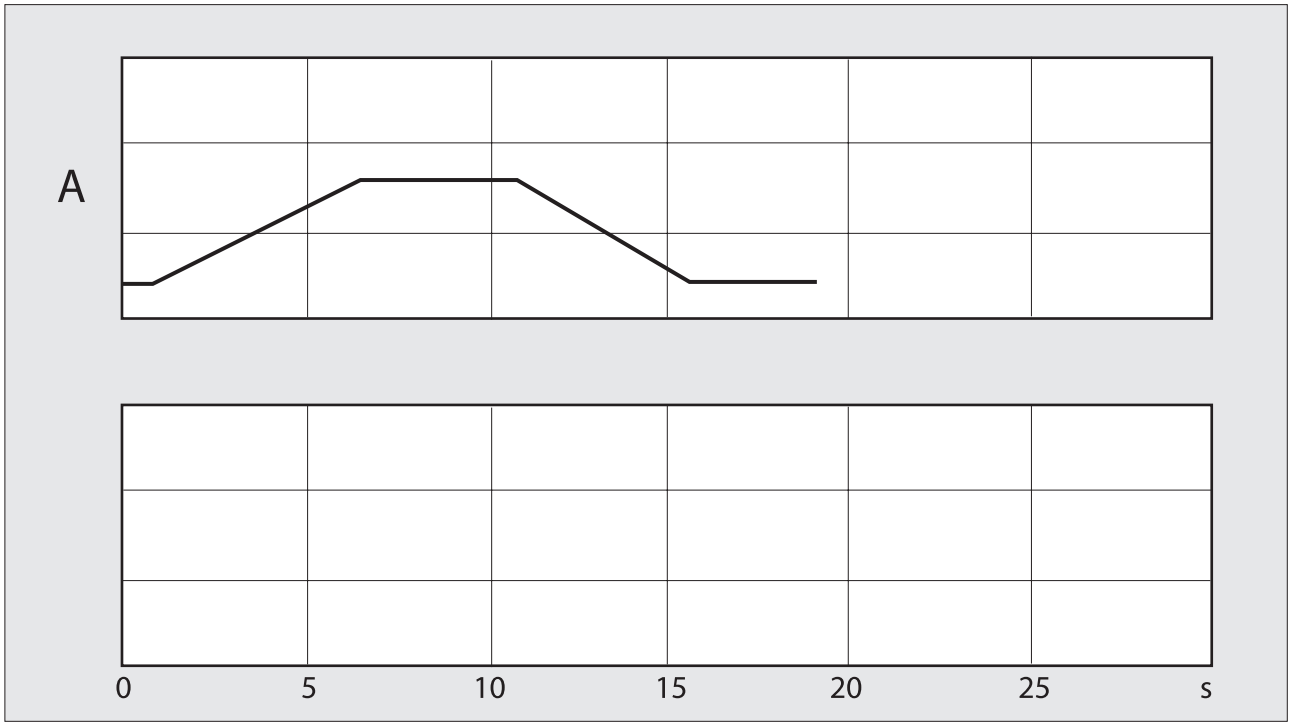

A - Pot. 2, convertible-top compartment lid

Work instruction		Display OK	If not OK
3	♦ Calibrate convertible top using 9588 Porsche System Tester II ♦ Erase fault memory ♦ Completely open and close convertible top 3 times ♦ Read out fault memory again	Fault code 4 not stored → End	Fault code 4 stored ⇒ Step 4

Work instruction			Display OK	If not OK
4	Check wires between potentiometer (convertible-top compartment lid) and convertible top control module for short circuit to positive	♦ Ignition off ♦ Pull off plug C on convertible top control module ♦ Pull off plug from potentiometer (convertible-top compartment lid position) ♦ Ignition on ♦ Measure voltage between plug C pin 1 and ground ♦ Measure voltage between plug C pin 3 and ground ♦ Measure voltage between plug C pin 5 and ground	< 0.3 V ⇒ Step 5	Repair wiring harness → End
5	Check wires between potentiometer (convertible-top compartment lid) and convertible top control module for short circuit to ground	♦ Ignition off ♦ Measure resistance between plug C pin 1 and ground ♦ Measure resistance between plug C pin 3 and ground ♦ Measure resistance between plug C pin 5 and ground	∞ Ω ⇒ Step 6	Repair wiring harness → End

Work instruction			Display OK	If not OK
6	Check wires between potentiometer (convertible-top compartment lid position) and convertible top control module for short circuit	♦ Ignition off ♦ Measure resistance respectively between plug C pin 1 and: • Pin 2 • Pin 3 • Pin 4 • Pin 5 ♦ Measure resistance respectively between plug C pin 3 and: • Pin 2 • Pin 4 • Pin 5 ♦ Measure resistance respectively between plug C pin 5 and: • Pin 2 • Pin 4	∞ Ω ⇒ Step 7	Repair wiring harness → End
7	♦ Replace potentiometer (convertible-top compartment lid position) ♦ Calibrate convertible top using 9588 Porsche System Tester II ♦ Erase fault memory ♦ Completely open and close convertible top 3 times ♦ Read out fault memory again		Fault code 4 not stored → End	Fault code 4 stored ⇒ Step 8
8	♦ Replace convertible top control module		→ End	

Fault code 5

Timeout error

This fault is entered if:

- a motor is actuated but the accompanying end position switch is not activated within 6 seconds,
- or the convertible top motor or convertible-top compartment lid motor is actuated but the accompanying pot. fault does not indicate a change within 3 seconds.

Diagnostic conditions

- Completely open and close convertible top

Possible cause of fault

- Convertible top was opened too long and no longer locks independently upon closing (material strain too great!)
- One of the end position switches is faulty
- Convertible top control module defective

Affected pins

-

Diagnosis/troubleshooting

Note!

Work instruction			Display OK	If not OK
1	Check functioning of convertible top	♦ Ignition on ♦ Completely open and close convertible top	• Problem-free functioning until the convertible top is almost closed, it is then necessary to pull on the gripper to lock it completely ⇒ Close convertible top, soak with water and allow to dry in closed position (at least 10 hours) → End	⇒ Step 2

Work instruction			Display OK	If not OK
2	Preparatory work for step 3: ♦ Ignition on ♦ Connect 9588 Porsche System Tester II and call up the Input signals menu Select and call up the following 9 input signals: ♦ 'Closure locked' ♦ 'Closure unlocked' ♦ 'Convertible top' ♦ 'Convertible-top compartment lid' ♦ 'Side flap top right' ♦ 'Side flap bottom right' ♦ 'Side flap top left' ♦ 'Side flap bottom left' ♦ Latching hook		⇒ Step 3	
3	Check switch positions when convertible top is closed	♦ Close convertible top completely until it has reached its final position ♦ Check switch positions	The following switches indicate "closed": • 'Closure locked' • 'Side flap bottom right' • 'Side flap bottom left' The following switches indicate "open": • 'Closure not unlocked' • 'Convertible top not raised' • 'Convertible-top compartment lid locked' • 'Side flap not top right' • 'Side flap not top left' • 'Latching hook actuated' ⇒ Step 4	If one or more switch postions are not as described above, the respective switch or wire is faulty carry out test as described in 'fault code 1' ⇒ section "Diagnosis/troubleshooting" in **61-11**

Work instruction			Display OK	If not OK
4	Check switch positions when convertible top is open	♦ Open convertible top completely until it has reached its final position ♦ Check switch positions	The following switches indicate "closed": • 'Closure locked' • 'Convertible top raised' • 'Side flap top right' • 'Side flap top left' • 'Latching hook not actuated' The following switches indicate "open": • 'Closure not unlocked' • 'Convertible-top compartment lid locked' • 'Side flap not bottom right' • 'Side flap not bottom left' ⇒ Step 5	If one or more switch postions are not as described above, the respective switch or wire is faulty carry out test as described in 'fault code 1' ⇒ section "Diagnosis/troubleshooting" in **61-11**
5	Preparatory work for step 6: ♦ Ignition on ♦ Call up data logger in the Input signals menu in 9588 Porsche System Tester II ♦ Select and call up actual value 'Pot. 1 convertible top'		⇒ Step 6	
6	Check voltage characteristic from 'Pot. 1 convertible top' while opening and closing	♦ Close convertible top completely until it has reached its final position and open it again ♦ Observe the voltage characteristic in the process ♦ Repeat the process if necessary	The voltage characteristic has a continuous path (similar to that illustrated in the figure below) and changes over the exact period of time in which the convertible top is moving in the rear area ⇒ Step 7	The voltage characteristic no longer changes even though the convertible top is still moving in the rear area Carry out test as described in 'error code 1' ⇒ section "Diagnosis/troubleshooting" in **61-13**

Note!

♦

♦

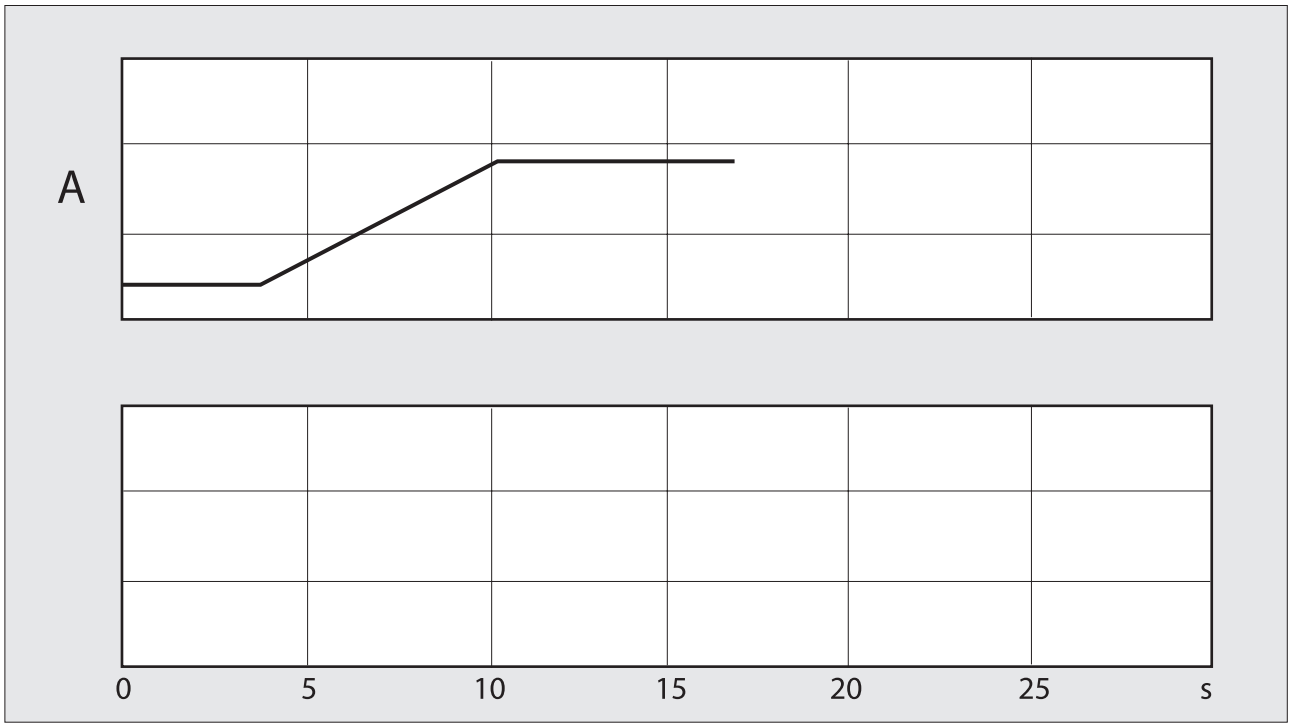

A - Pot. 1, convertible top

Work instruction			Display OK	If not OK
7	Preparatory work for step 8: ♦ Ignition on ♦ Call up data logger in the Input signals menu in 9588 Porsche System Tester II ♦ Select and call up actual value 'Pot. 2 convertible-top compartment lid'		⇒ Step 8	
8	Check voltage characteristic from 'Pot. 2 convertible-top compartment lid' while opening and closing	♦ Close convertible top completely until it has reached its final position and open it again ♦ Observe the voltage characteristic in the process ♦ Repeat the process if necessary	The voltage characteristic has a continuous path (similar to that illustrated in the figure below) and changes over the exact period of time in which the convertible-top compartment lid is moving ⇒ Step 9	The voltage characteristic no longer changes even though the convertible-top compartment lid is still moving in the rear area Carry out test as described in 'error code 1' ⇒ section "Diagnosis/troubleshooting" in **61-14**

Note!

-
-

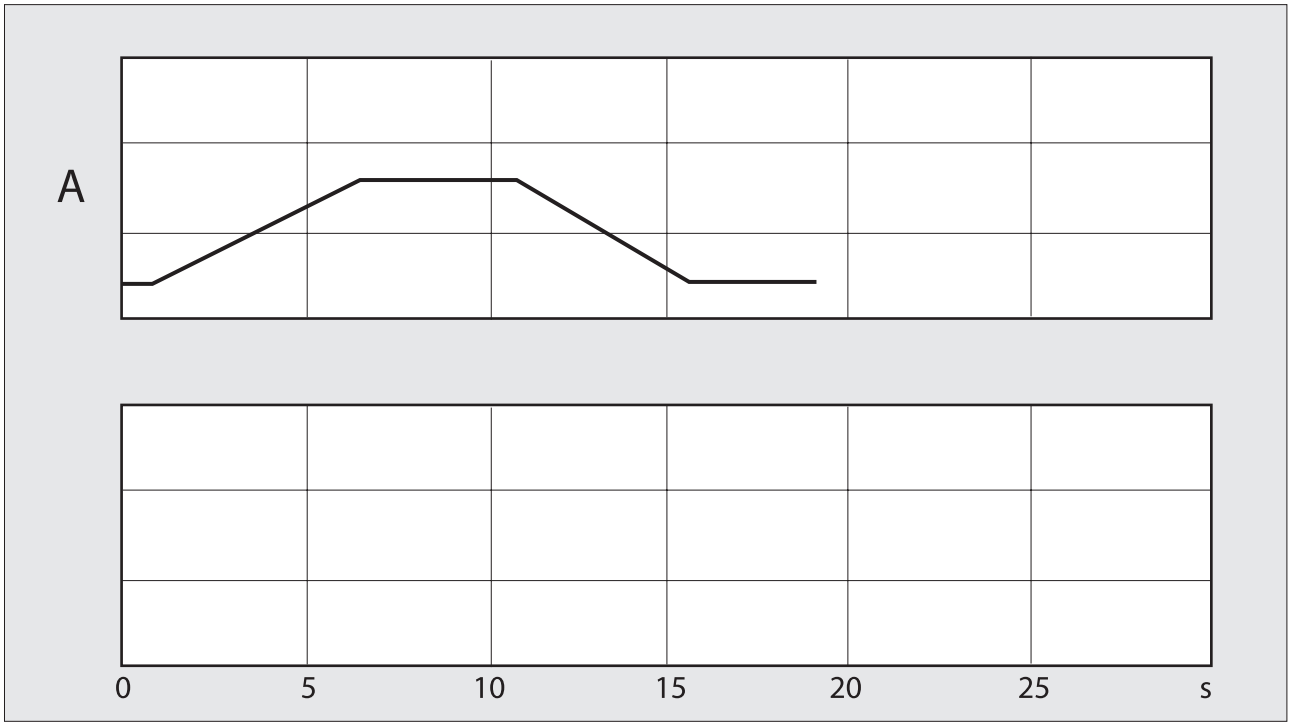

A - Pot. 2, convertible-top compartment lid

Work instruction		Display OK	If not OK
9	♦ Delete fault memory with the 9588 Porsche System Tester II ♦ Completely open and close convertible top 3 times with the ignition on ♦ Test drive and completely open and close 3 times ♦ Read out fault memory again with the 9588 Porsche System Tester II	Fault code 5 not stored → End	Fault code 5 entered ⇒ Step 99
10	♦ Replace convertible top control module	→ End	

Fault code 6

Calibration required

Diagnostic conditions

- Ignition on

Possible cause of fault

- Fault code 3 or fault code 4 is entered in the fault memory
- Calibration was erased
- A new convertible top control unit was installed

Affected pins

-

Diagnosis/troubleshooting

Work instruction			Display OK	If not OK
1	Check fault memory	♦ Read out fault memory with the 9588 Porsche System Tester II	Fault code 3 or fault code 4 are not stored ⇒ Step 2	• Fault code 3 stored see ⇒ chapter "Convertible top pot. fault" in **61-13** • Fault code 4 stored see ⇒ chapter "Convertible-top compartment lid pot. fault" in **61-14**
2	♦ Calibrate convertible top using 9588 Porsche System Tester II		→ End	

Fault code 7

Supply voltage

The fault is entered if the voltage at the input of 'terminal 15' is not within the normal voltage range of approximately 9 V to 15 V when operated three times in succession.

Diagnostic conditions

- Switch on all possible loads to load the vehicle electrical supply voltage and to do this:
- Switch on the ignition and completely open and close convertible top 3 times using the switch, remote control (not USA) or comfort opening/closing function
- Allow engine to idle and completely open and close convertible top 3 times using the switch
- Engine fast idle speed and completely open and close convertible top 3 times using the switch
- Carry out a test drive and completely open and close convertible top 3 times using the switch

Possible cause of fault

- Undervoltage in vehicle electrical supply due to weak battery or faulty generator
- Overvoltage in vehicle electrical supply due to faulty generator
- Short circuit to ground or open circuit in the wiring between terminal 15 power supply and convertible top control module
- Convertible top control module defective

Affected pins

Plug A pin 6

Diagnosis/troubleshooting

Work instruction			Display OK	If not OK
1	Check vehicle electrical supply voltage	♦ Ignition on ♦ Measure voltage at the positive and negative battery terminals	Approx. 11 V ⇒ Step 2	Charge and replace battery, if necessary replace battery, then ⇒ Step 6

Work instruction			Display OK	If not OK
2	Check charging system	♦ Allow engine to run at idle speed and at fast idle speed ♦ Measure generator charge voltage	Approx. 12 V to 14 V ⇒ Step 3	Repair charging system, then ⇒ Step 6
3	Check power supply for convertible top control module	♦ Ignition off ♦ Pull off plug A on convertible top control module ♦ Ignition on ♦ Measure voltage between plug A pin 6 and ground	> 11 V ⇒ Step 6	⇒ Step 4
4	Check wire between fuse B5 and convertible top control module for short circuit to ground	♦ Ignition off ♦ Pull off fuse B5 ♦ Measure resistance between convertible top control module plug A pin 6 and ground	∞ Ω ⇒ Step 5	Repair wiring harness → End
5	Check wire between fuse B5 and convertible top control module for open circuit	♦ Ignition off ♦ Measure resistance between convertible top control module plug A pin 6 and fuse holder B pin A 10 (fuse B5)	< 5 Ω ⇒ Step 6	Repair wiring harness → End
6	♦ Delete fault memory with the 9588 Porsche System Tester II ♦ Satisfy diagnostic conditions ♦ Read out fault memory again with the 9588 Porsche System Tester II		Fault code 7 not stored → End	Fault code 7 entered ⇒ Step 7
7	♦ Replace convertible top control module		→ End	

Airbag B05

Introduction

System B 05

911 Turbo (996)

Safety notes

Warning!

Observe the safety regulations when working on the airbag system ⇒ Rep. Gr. 69; Safety regulations for vehicles with airbag and belt tensioner.

Danger!

Danger of injury if airbag triggering units were not locked!

The airbags cannot be triggered in the event of an accident or another event which requires them to be operational!

- ***Always lock new airbag triggering units immediately after installing them in the vehicle!***
- ***Only operate the vehicle if the airbag triggering unit was locked beforehand!***

Warning!

Danger of injury when driving and working on the vehicle!

- ***Never hang the Porsche System Tester II No. 9588 over the steering wheel!***
- ***Always place tools and special tools outside the functioning range of all airbags and the roll-over bar!***

Warning!

Danger of injury and damage to property as a result of incorrect handling of airbag units!

Please observe the following points:

- ***Inspection and assembly work may only be carried out by specialist staff!***

- ***After the battery is disconnected, assembly work or work on the vehicle with a hammer or similar tools may not be started until after a waiting period of 1 minute!***
- ***This is necessary in order to interrupt the power supply to the airbag system and to ensure it is not triggered accidentally!***
- ***Airbag units must be fitted immediately after being removed from their storage location!***
- ***On no account may airbag units be left lying around unsupervised!***
- ***If work is interrupted, airbag units must immediately be locked away again!***
- ***Airbag units must not come into contact with grease, oil, cleaning agents or similar substances!***
- ***Airbag units may not be exposed to temperatures above 90°C!***
- ***Airbag units and control modules which have fallen from a height of more than 0.5 m may no longer be installed!***
- ***No additional linings, stickers or similar may be attached to the steering wheel and in the vicinity of the passenger's airbag!***
- ***No changes may be made to the wiring and to the components of the airbag system!***
- ***The battery must always be disconnected before starting straightening and welding work with an electrical welding unit!***

Warning!

Danger of injury and damage to property as a result of incorrect handling of airbag units!

Please observe the following points:

- ***The airbag units are pyrotechnical items in hazard class T 1!***
- ***Handling, transport and storage of these units must conform to the explosives legislation!***
- ***The listed statutory requirements refer to the Federal Republic of Germany!***
- ***The relevant valid regulations must be observed in all other countries!***

- ***The commencement of work with pyrotechnical items must be reported 14 days in advance to the Trade Supervisory Office (responsible authority)!***
- ***Airbag units may only be dispatched in transport packaging officially approved for that purpose!***
- ***Airbag units may not be transported with other hazardous goods!***
- ***Internally, they must always be transported in the luggage compartment or cargo hold of a vehicle using the above-mentioned transport packaging!***
- ***They must not be transported in the passenger's compartment!***
- ***Airbag units must be stored in accordance with the second ordinance of the explosives legislation!***
- ***This ordinance stipulates that small quantities of materials and objects may be stored at certain locations without special storage approval!***
- ***According to the Explosives Storage Directive of August 1997, these quantities are max. 10 kg (net) in a work room and max. 100 kg (net) in a storage room in the case of Class T 1 pyrotechnical items!***

Caution!

Danger of damage due to improper handling of batteries and control module plug connections!

This may cause malfunctions and system failures!

- ***Disconnect the battery connection terminals only when the engine is switched off!***
- ***Start the engine only when the battery connection terminals are properly connected!***
- ***Pull off or push on plug connections for the control modules or other electronic components only when the ignition is switched off!***
- ***Protect the plug connections from liquids!***
- ***Remove any penetrating liquids completely by suitable means!***
- ***Disconnect the negative terminal of the battery before welding work is started on the vehicle.***

General information

Note!

The following points must be observed during vehicle diagnosis:

- After the battery is connected, volatile memories must be reprogrammed. In the case of radio coding and tuning, the customer must be informed of decoding and the deleted tuner memory.
- After troubleshooting or repairs, erase the fault memory with the Porsche System Tester II No. 9588 and carry out a test drive.
- After the test drive, read out the fault memory with the Porsche System Tester II No. 9588 again.

General information on the fault memory

Note!

-
-
-

Note!

The following components must be removed and replaced following an accident in which the airbag system was triggered:

- Contact unit
- Triggered airbag unit(s)

The triggering unit must be replaced after the airbag is triggered for the third time.

Fault code setting conditions

Fault codes can be set in several circumstances, e.g.:

- Battery disconnected
- Plug connections disconnected
- Faulty coding
- Power failure
- etc.

In these circumstances, no fault is present in the system and the fault memory must be erased.

Fault memory Info key F8

In order to be able to assess the fault exactly, the fault memory Info key F8 must be pressed. This information should be saved using the Save key F4 and printed out. If a fault code is stored with a "not present" status and no other problems are present, then the fault memory must be erased.

Fault type/Fault occurrence	
Open circuit/short circuit to ground	There is (present) or was (not present) a short circuit to ground or an open circuit in the circuit to the control module terminal.
Short circuit to B+	There is (present) or was (not present) a short circuit to voltage.
Below limit value	Resistance too low. Wiring leak e.g. short circuit to ground, faulty component.
Above limit value	Resistance too high e.g. open circuit, component faulty.
Start	Shows the time elapsed since the fault first occurred (present). If the fault occurs again, the clock continues.
Stop	Shows the time elapsed since the fault was first remedied (not present). If the fault occurs again, the clock continues.

Fault occurrence

The fault occurs in the following way:

- Statically (i.e. once)
- Sporadically (i.e. more than once)

Fault status

The following status types are possible:

- Present (at the time of the last diagnostic routine)
- Not present (at the time of the last diagnostic routine)

Tools

Warning!

Danger of injury when driving and working on the vehicle!

- ***Never hang the Porsche System Tester II No. 9588 over the steering wheel!***
- ***Always place tools and special tools outside the functioning range of all airbags and roll-over bar!***

Warning!

Danger of personal injury due to driving with special tools!

For safety reasons, it is not permissible to drive with special tools attached instead of the airbag units or belt tensioners.

Note!

Note!

Porsche System Tester II No. 9588

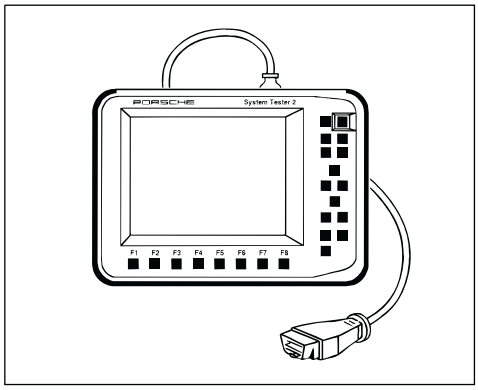

Commercially available digital multimeter

►

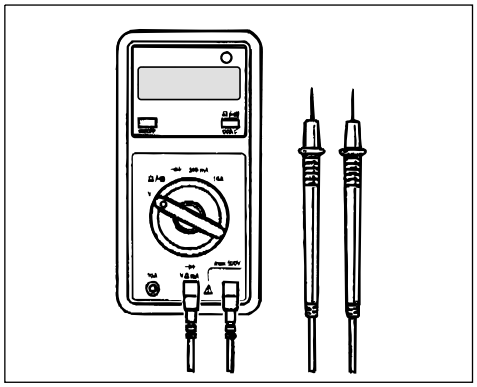

Measurement tool set No. 9684

►

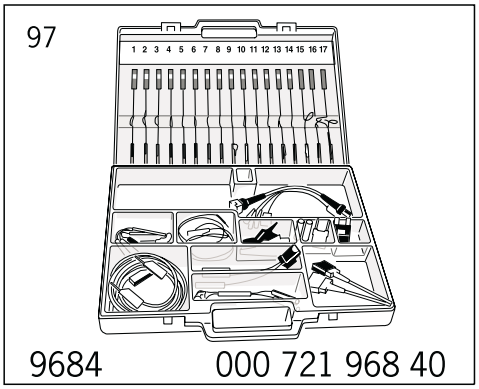

Test tool No. 9516

►

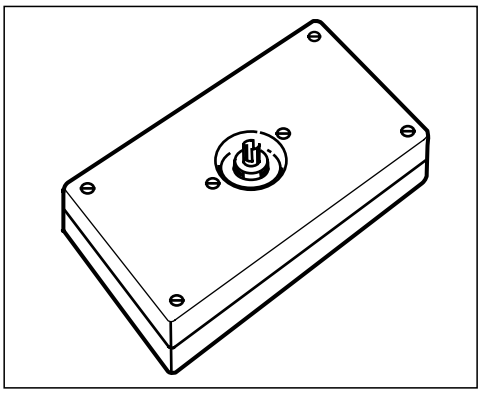

Adapter cable No. 9566

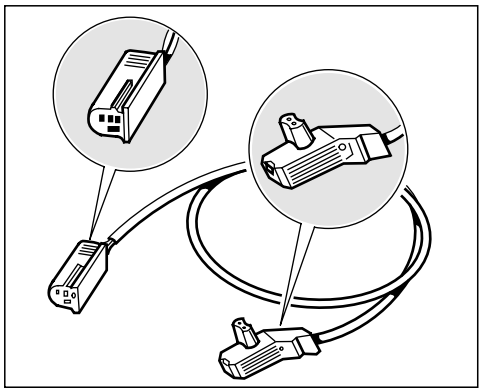

Test tool No. 9516/1

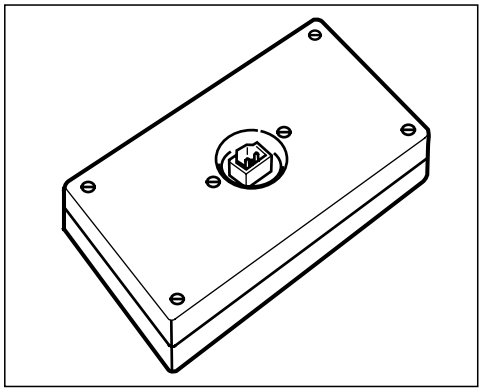

Adapter cable No. 9516/2

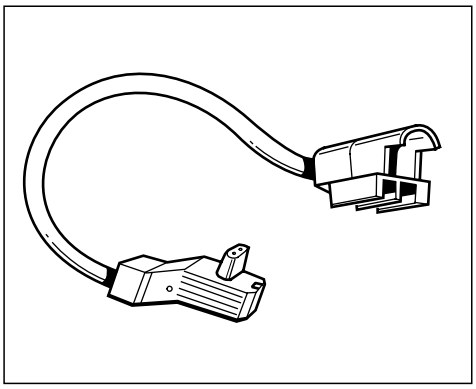

Test tool No. 9516/4

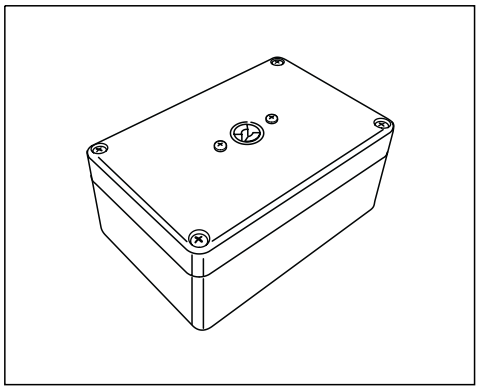

Component arrangement

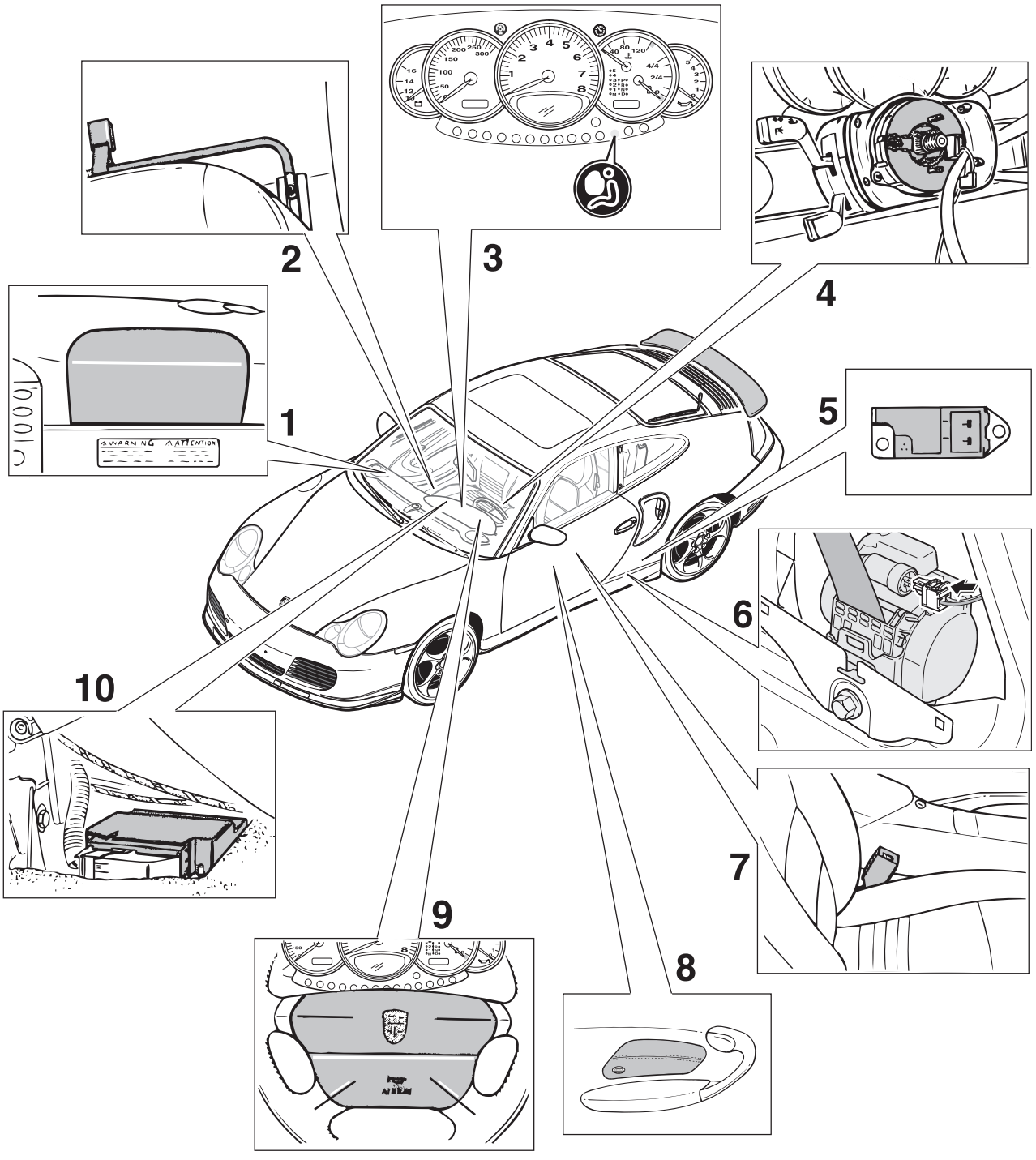

1 - Passenger's airbag unit
2 - Plug connection, child restraint system
3 - Warning light
4 - Contact unit
5 - Airbag sensor
6 - Seat belt tensioner
7 - Belt buckle, driver/passenger
8 - Side airbag unit
9 - Driver's airbag unit
10 - Airbag triggering unit

Connector assignment

Wiring harness plugs for airbag triggering unit

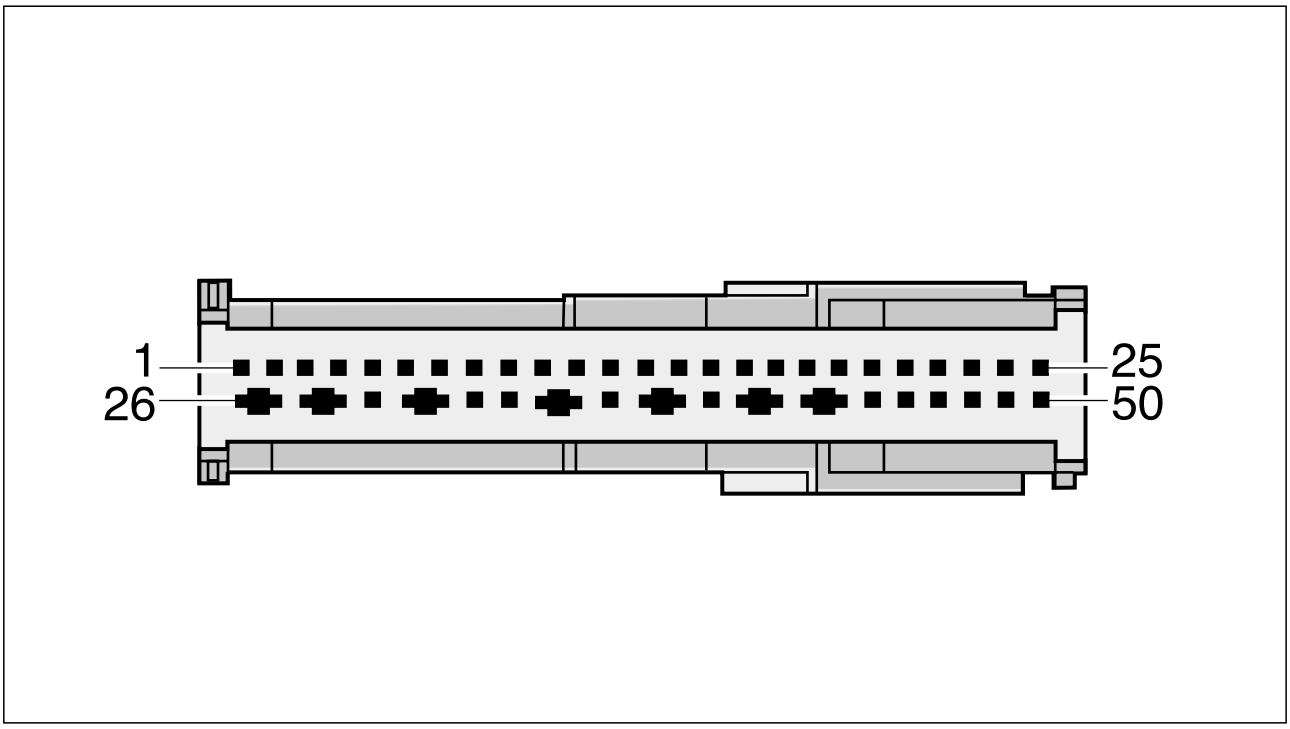

Pin	Designation	Pin	Designation
1	Belt tensioner, left positive	20	Driver's side airbag sensor
2	Belt tensioner, left ground	21	Passenger's side airbag
3	Belt tensioner, right positive	22 to 25	Not used
4	Belt tensioner, right ground	26/27	Short circuit bridge
5	Terminal 86s	28/29	Short circuit bridge
6	Terminal 31	30	Not used
7	Warning light	31/32	Short circuit bridge
8	Belt buckle, passenger	33	Child seat detection
9	K lead	34	Crash output
10	Driver's ignition pill, positive	35/36	Short circuit bridge
11	Driver's ignition pill, negative	37	Not used
12	Belt buckle, driver	38/39	Short circuit bridge
13	Passenger's ignition pill, positive	40	Not used
14	Passenger's ignition pill, negative	41/42	Short circuit bridge
15	Not used	43/44	Short circuit bridge
16	Driver's side airbag, positive	45	Not used

Pin	Designation	Pin	Designation
17	Driver's side airbag, ground	46	Not used
18	Passenger's side airbag, positive	47	Not used
19	Passenger's side airbag, ground	48 to 50	Not used

Control module function

Events

Event data can be read out in the menu item "Events" after airbag triggering. A maximum of three events can be stored. The airbag triggering unit must be replaced after the third event, since the airbag warning light lights up continuously and the events cannot be deleted.

Locking

Danger!

Danger of injury if airbag triggering units were not locked!

The airbags cannot be triggered in the event of an accident or another event which requires them to be operational!

- ***Always lock new airbag triggering units immediately after installing them in the vehicle!***
- ***Only operate the vehicle if the airbag triggering unit was locked beforehand!***

An unlocked triggering unit can be locked under the menu item "Locking". When the airbag triggering unit is replaced, the new airbag triggering unit must be locked.

Note!

-
-

If an airbag triggering unit is unlocked, the airbag warning light flashes. The airbag triggering unit must then be locked.

The airbag triggering unit is delivered from the Parts Service dealers in an unlocked state.

Procedure:

1. Connect the Porsche System Tester II No. 9588 and switch on the ignition.
2. Select Boxster as the vehicle type and start the automatic control module search.
3. Select the menu item "Locking" and press the key [>>].

4. Porsche System Tester II No. 9588 indicates the vehicle type. Check the vehicle type and confirm using the F7 key.
5. Porsche System Tester II No. 9588 indicates the vehicle identification number. Check vehicle identification number, accept with the key >>, and code by pressing key F7.
6. Porsche System Tester II No. 9588 shows "Start locking with [F8]". Press key F8. Porsche System Tester II No. 9588 then displays "Control module locking, please wait".

Note!

If there is no fault, the following message is displayed after a short waiting period:

Airbag was locked

This ends locking.

The following messages can be displayed in a fault state:

Airbag was already locked

No Porsche control unit

Incorrect vehicle type

Incorrect database version

Incorrect equipment

In the event of a fault, the triggering unit cannot be locked.

In the case of the "incorrect equipment" message, select the correct equipment.

Replace the triggering unit in the case of the other messages.

Coding

Extract coding

Under the menu item "Extract coding" you can read out which equipment features are activated and which are not.

Also, it is possible to read out the vehicle type and the data record version, and where the airbag triggering unit was locked.

The following equipment features can be read out:

- Driver's/passenger's airbag
- Buckle (detects whether seat belt is fastened)
- Child seat occupancy (detects whether a child seat is being used on the passenger's side)
- USA (vehicles)

Modify coding

Under the menu item "Modify coding" you can adapt the airbag triggering unit to the vehicle equipment.

After the airbag triggering unit is replaced, the coding must be adapted to the vehicle equipment.

The following equipment features can be changed:

- Driver's/passenger's airbag
- Buckle
- Belt tensioner
- Child seat occupancy (passenger)
- USA (vehicles)

Coding table for USA vehicles

Coding	Setting	Function
Driver's/passenger's airbag	Active	
Buckle	Active	The coding is adapted to the vehicle equipment
Belt tensioner	Active as of model year 2002	The coding is adapted to the vehicle equipment
Child seat occupancy (passenger)	Active/not active Code "active" if a belt buckle for child seat detection is installed	Depending on coding, the child seat occupancy function is activated or deactivated. If the child seat occupancy is activated and the child seat is installed, the airbag warning light or terminal 86s flashes for 60 seconds after the ignition is switched on.
USA	Active	

Coding table for RoW vehicles

Coding	Setting	Function
Driver's/passenger's airbag	Active	
Buckle	Not active	

Coding	Setting	Function
Belt tensioner	Active as of model year 2002	
Child seat occupancy (passenger)	Active/not active Code "active" if a belt buckle for child seat detection is installed	Depending on coding, the child seat occupancy function is activated or deactivated. If the child seat occupancy is activated and the child seat is installed, the airbag warning light or terminal 86s flashes for 60 seconds after the ignition is switched on.
USA	Not active	

Note!

◆

◆

Note!

Child seat occupancy

In relation to this, see Technical Information ⇒ 6; Rep. Gr. 6923; Retrofitting bar with belt buckle and activating child seat occupancy.

Fault overview

Fault code	Fault text	Fault effect
1	Airbag warning light	Fault memory The warning light is activated
2	Airbag warning light	Fault memory The warning light is activated
3	Supply voltage	Fault memory The warning light is on as long as the limit value is exceeded or not reached.
4	Ignition circuit, driver	Fault memory/warning light
5	Ignition circuit, driver	Fault memory/warning light
6	Driver's belt tensioner	Fault memory/warning light
7	Driver's belt tensioner	Fault memory/warning light
8	Passenger's belt tensioner	Fault memory/warning light
9	Passenger's belt tensioner	Fault memory/warning light
10	Ignition circuit, passenger	Fault memory/warning light
11	Ignition circuit, passenger	Fault memory/warning light
12	Ignition circuit, side airbag	Fault memory/warning light
13	Ignition circuit, side airbag	Fault memory/warning light
14	Ignition circuit, side airbag	Fault memory/warning light
15	Ignition circuit, side airbag	Fault memory/warning light
20	Ignition circuit, driver	Fault memory/warning light
21	Ignition circuit, driver	Fault memory/warning light
22	Driver's belt tensioner	Fault memory/warning light
23	Driver's belt tensioner	Fault memory/warning light
24	Passenger's belt tensioner	Fault memory/warning light
25	Passenger's belt tensioner	Fault memory/warning light
26	Ignition circuit, passenger	Fault memory/warning light
27	Ignition circuit, passenger	Fault memory/warning light
28	Ignition circuit, side airbag	Fault memory/warning light
29	Ignition circuit, side airbag	Fault memory/warning light
30	Ignition circuit, side airbag	Fault memory/warning light
31	Ignition circuit, side airbag	Fault memory/warning light
36	Ignition circuit, driver	Fault memory/warning light
37	Driver's belt tensioner	Fault memory/warning light
38	Passenger's belt tensioner	Fault memory/warning light
39	Ignition circuit, passenger	Fault memory/warning light

Fault code	Fault text	Fault effect
40	Ignition circuit, side airbag	Fault memory/warning light
41	Ignition circuit, side airbag	Fault memory/warning light
44	Belt buckle, driver	Fault memory/warning light
45	Belt buckle, driver	Fault memory/warning light
46	Belt buckle, driver	Fault memory/warning light
47	Belt buckle, passenger	Fault memory/warning light
48	Belt buckle, passenger	Fault memory/warning light
49	Belt buckle, passenger	Fault memory/warning light
50	Belt buckle, driver	Fault memory The warning light is on as long as the limit value is exceeded or not reached.
51	Belt buckle, passenger	Fault memory The warning light is on as long as the limit value is exceeded or not reached.
53	Side airbag sensor (airbag sensor)	Fault memory/warning light
56	Side airbag sensor (airbag sensor)	Fault memory/warning light
70	Child seat detection	Fault memory/warning light
71	Child seat detection	Fault memory
72	Child seat detection	Fault memory/warning light
73	Child seat detection	Fault memory/warning light
85	Side airbag sensor (airbag sensor)	Fault memory/warning light
86	Side airbag sensor (airbag sensor)	Fault memory/warning light
87	Side airbag sensor (airbag sensor)	Fault memory/warning light
88	Side airbag sensor (airbag sensor)	Fault memory/warning light
Fault codes ≥ 100	xxx (depending on the fault code)	Fault memory/warning light The fault cannot be erased and the airbag triggering unit is faulty

Fault codes 1 and 2

Airbag warning light

Diagnostic conditions

- Ignition on

Note!

Due to a short circuit bridge in the plug of the triggering unit for the airbag, the warning light wiring short-circuits to ground if the plug is disconnected.

Possible cause of fault

- Faulty fuse
- Airbag warning light faulty (no bulb, cannot be exchanged)
- Short circuit to B+/ground or open circuit in the wiring between the instrument cluster and the airbag triggering unit

Affected terminals

Terminal 7

Diagnosis/troubleshooting

Work instruction			Display OK	If not OK
1	Check fuses	Check fuse E1	⇒ Step 2	Replace fuse → End
2	Visual inspection	♦ Check if the warning light in the instrument cluster lights up after the ignition is turned on	⇒ Step 3	Read fault memory of the instrument cluster and procede according to diagnosis If no fault referring to the airbag warning light is stored in the instrument cluster ⇒ Step 3
3	Check the wiring from the airbag triggering unit to the instrument cluster	♦ Check the wiring for pinching or chafing damage	→ End	

Fault code 3

Supply voltage

Diagnostic conditions

- Ignition on

Possible cause of fault

- Low battery positive voltage

Affected terminals

Terminal 5

Diagnosis/troubleshooting

Work instruction		Display OK	If not OK
1	Check the battery or alternator.	⇒ Step 2	Charge or replace battery. Repair alternator → End
2	Check the ground points and the plug connection on the airbag triggering unit for corrosion	→ End	

Note!

The warning light is on as long as the limit value is exceeded or not reached.

Fault codes 4, 5, 20, 21, 36

Ignition circuit, driver

Diagnostic conditions

- Ignition on

Possible cause of fault

- Short circuit to B+/ground or open circuit in the wiring between the driver's airbag unit and the airbag triggering unit
- Driver's airbag unit faulty
- Triggering unit for airbag faulty

Affected terminals

Terminals 10 and 11

Note!

If the fault memory is cleared, the ignition must be switched off, the ignition key removed and the ignition switched on again in order to check the fault path. Only in this way is another self-test carried out.

Diagnosis/troubleshooting

Work instruction			Display OK	If not OK
1	Remove driver's airbag unit.		⇒ Step 2	
2	Check driver's airbag unit	• Attach the test tool No. 9516 instead of the airbag unit. • Erase fault memory • Switch off ignition • Remove ignition key • Switch on ignition • Read out fault memory	Replace airbag unit → End	⇒ Step 3

Test tool No. 9516 instead of the driver's airbag unit ►

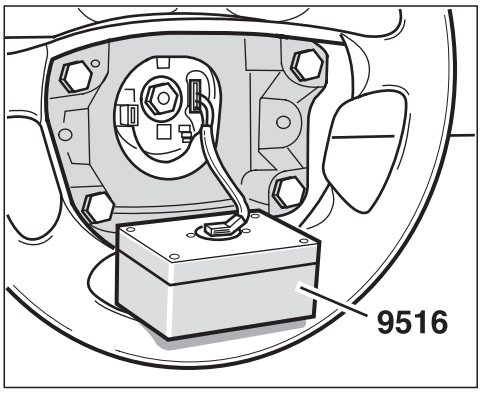

Work instruction			Display OK	If not OK
3	Check contact unit	♦ Disconnect the plug connection to the contact unit ♦ Attach test tool No. 9516/1 ♦ Erase fault memory ♦ Switch off ignition ♦ Remove ignition key ♦ Switch on ignition ♦ Read out fault memory	Replace contact unit → End	⇒ Step 4

Test tool No. 9516/1 for testing the contact unit

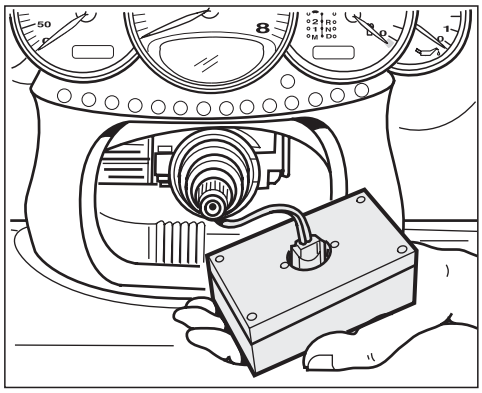

Work instruction		Display OK	If not OK
4	Check the wiring harness for pinching or chafing damage.	⇒ Step 5	Repair wiring harness → End
5	Replace the triggering unit.	→ End	

Fault codes 6, 7, 22, 23, 37

Driver's belt tensioner

Diagnostic conditions

- Ignition on

Possible cause of fault

- Incorrect coding
- Short circuit to B+/ground or open circuit in the wiring between the driver's belt tensioner and the control module
- Driver's belt tensioner faulty
- Triggering unit for airbag faulty

Note!

-
-
-

Affected terminals

Terminals 1 and 2 in left-hand drive vehicles

Terminals 3 and 4 in right-hand drive vehicles

Diagnosis/troubleshooting

Work instruction			Display OK	If not OK
1	Check coding	♦ Check in menu item "Extract coding", whether the coding corresponds to the vehicle equipment	⇒ Step 2	Adapt the coding to the vehicle equipment → End

Work instruction			Display OK	If not OK
2	Visual inspection	♦ Check whether the plug connection is correctly connected and locked	⇒ Step 3	Connect and lock plug connection → End
3	Check belt tensioner	♦ Switch off ignition ♦ Pull off plug on belt tensioner ♦ Connect test tool No. 9516/4 ♦ Switch on ignition ♦ Read out fault memory ♦ Erase fault memory ♦ Switch ignition off and remove ignition key ♦ Switch on ignition ♦ Read out fault memory	Replace belt tensioner → End	⇒ Step 4

Test tool No. 9516/4 instead of belt tensioner

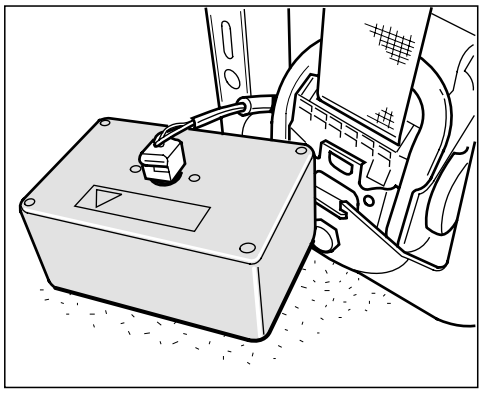

Work instruction		Display OK	If not OK
4	Check the wiring harness for pinching or chafing damage	⇒ Step 5	Repair wiring harness → End
5	Replace the triggering unit	→ End	

Note!

Fault codes 8, 9, 24, 25, 38

Passenger's belt tensioner

Diagnostic conditions

- Ignition on

Possible cause of fault

- Incorrect coding
- Short circuit to B+/ground or open circuit in the wiring between the passenger's belt tensioner and the airbag triggering unit
- Passenger's belt tensioner faulty
- Triggering unit for airbag faulty

Note!

-
-
-

Affected terminals

Terminals 3 and 4 in left-hand drive vehicles

Terminals 1 and 2 in right-hand drive vehicles

Diagnosis/troubleshooting

Work instruction			Display OK	If not OK
1	Check coding	♦ Check in menu item "Extract coding", whether the coding corresponds to the vehicle equipment	⇒ Step 2	Adapt the coding to the vehicle equipment → End

Work instruction			Display OK	If not OK
2	Visual inspection	Check whether the plug connection is correctly connected and locked	⇒ Step 3	Insert plug connection → End
3	Check belt tensioner	♦ Switch off ignition ♦ Pull off plug on belt tensioner ♦ Connect test tool No. 9516/4 ♦ Switch on ignition ♦ Read out fault memory ♦ Erase fault memory ♦ Switch ignition off and remove ignition key ♦ Switch on ignition ♦ Read out fault memory	Replace belt tensioner → End	⇒ Step 4

Test tool No. 9516/4 instead of belt tensioner

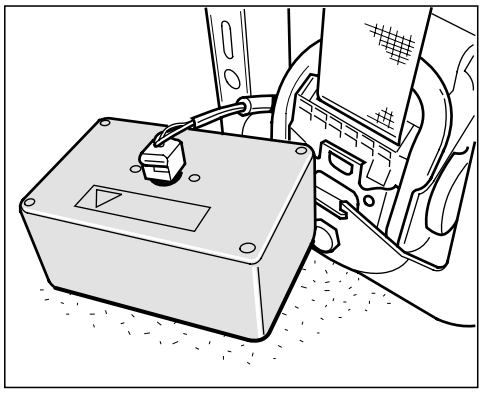

Work instruction		Display OK	If not OK
4	Check the wiring harness for pinching or chafing damage	⇒ Step 5	Repair wiring harness → End
5	Replace triggering unit for airbag	→ End	

Note!

Fault codes 10, 11, 26, 27, 39

Ignition circuit, passenger

Diagnostic conditions

- Ignition on

Possible cause of fault

- Short circuit to B+/ground or open circuit in the wiring between the passenger airbag unit and the airbag triggering unit
- Passenger's airbag unit is faulty
- Triggering unit for airbag is faulty

Affected terminals

Terminals 13 and 14

Diagnosis/troubleshooting

Work instruction			Display OK	If not OK
1	Check passenger's airbag unit	♦ Disconnect the plug connection to the passenger's airbag unit ♦ Connect special tool as shown in the diagrams below ♦ Erase fault memory ♦ Switch off ignition ♦ Remove ignition key ♦ Switch on ignition ♦ Read out fault memory	Replace passenger's airbag unit → End	⇒ Step 2

Test tool No. 9516 and adapter cable No. 9566 instead of the passenger's airbag unit ►

- Up to model year 2002:

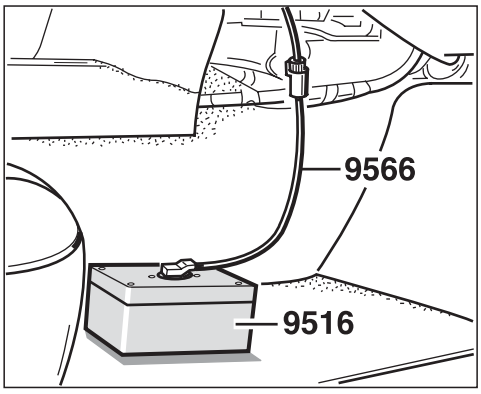

Test tool No. 9516 instead of the passenger's airbag unit ►

- Model year 2003

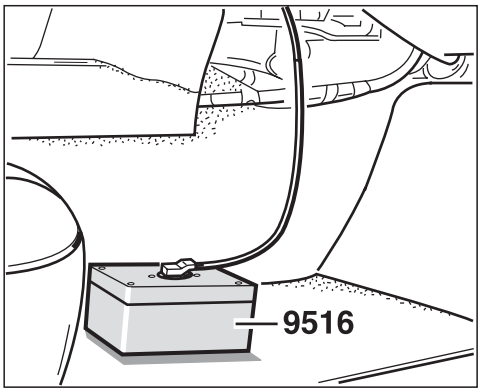

Work instruction		Display OK	If not OK
2	Check the wiring harness for pinching or chafing damage	⇒ Step 3	Repair wiring harness → End
3	Replace the triggering unit	→ End	

Fault codes 12, 13, 28, 29, 40

Ignition circuit, driver's side airbag

Diagnostic conditions

- Ignition on

Possible cause of fault

- Short circuit to B+/ground or open circuit in the wiring between the driver's side airbag unit and the airbag triggering unit
- Driver's side airbag faulty

Affected terminals

Terminals 16 and 17

Diagnosis/troubleshooting

The following illustration illustrates how the plug connection is disconnected from the side airbag. ►

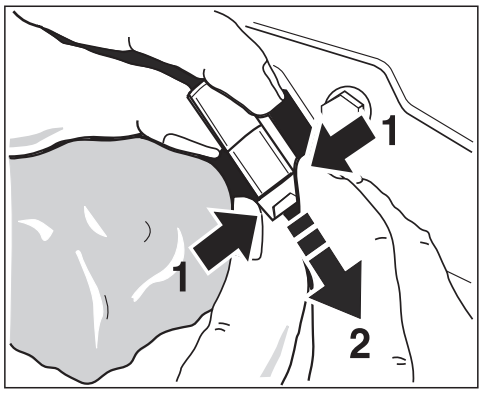

Work instruction			Display OK	If not OK
1	Check driver's side airbag	♦ Pull plug off the driver's side airbag ♦ Connect test tool No. 9516 and adapter cable No. 9516/2 ♦ Erase fault memory ♦ Switch off ignition ♦ Remove ignition key ♦ Switch on ignition ♦ Read out fault memory	Replace side airbag → End	⇒ Step 2

Test tool No. 9516 and adapter cable No. 9516/2 instead of the driver's side airbag ►

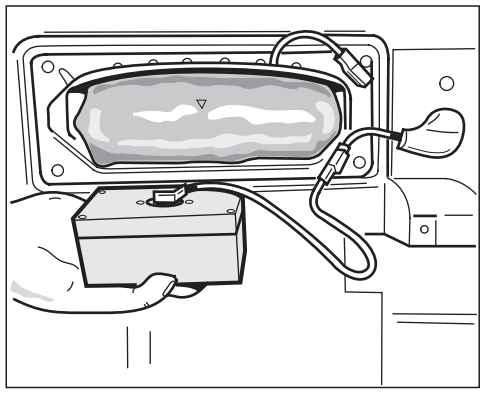

Work instruction		Display OK	If not OK
2	Check the wiring harness for pinching or chafing damage.	⇒ Step 3	Repair wiring harness → End
3	Replace triggering unit for airbag	→ End	

Fault codes 14, 15, 30, 31, 41

Ignition circuit, pasenger's side airbag

Diagnostic conditions

- Ignition on

Possible cause of fault

- Short circuit to B+/ground or open circuit in the wiring between the passenger side airbag unit and the airbag triggering unit
- Passenger's side airbag faulty
- Triggering unit for airbag faulty

Affected terminals

Terminals 18 and 19

Diagnosis/troubleshooting

The following illustration illustrates how the plug connection is disconnected from the side airbag. ►

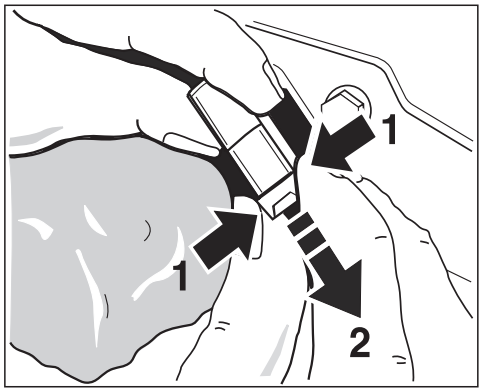

Work instruction			Display OK	If not OK
1	Check passenger's side airbag	♦ Pull plug off the passenger's side airbag ♦ Connect test tool No. 9516 and adapter cable No. 9516/2 ♦ Switch on ignition ♦ Erase fault memory ♦ Switch off ignition ♦ Remove ignition key ♦ Switch on ignition ♦ Read out fault memory	Replace side airbag → End	⇒ Step 2

Test tool No. 9516 and adapter cable No. 9516/2 instead of the side airbag ►

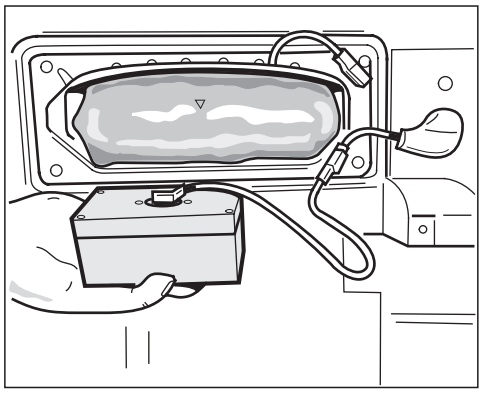

Work instruction		**Display OK**	**If not OK**
2	Check the wiring harness for pinching or chafing damage.	⇒ Step 3	Repair wiring harness → End
3	Replace triggering unit for airbag	→ End	

Fault codes 44, 45, 46, 50

Driver's belt buckle

Diagnostic conditions

- Ignition on

Possible cause of fault

- Incorrect coding
- Short circuit to B+/ground or open circuit in the wiring between the driver's belt buckle and the airbag triggering unit
- Driver's belt buckle faulty
- Triggering unit for airbag faulty

Note!

- *When the coding is changed in the menu item "Change coding", the ignition must always be switched off afterwards and the key removed.*
- *After the ignition is switched on again, the new coding from the airbag triggering unit is updated and the stored faults can be erased.*

Affected terminals

Terminals 6 and 12

Diagnosis/troubleshooting

Work instruction			Display OK	If not OK
1	Check coding	♦ Check the belt buckle coding in the menu item "Extract coding "	Only in USA vehicles must the belt buckle be coded "active" ⇒ Step 2	Correct coding, switch off ignition and remove key. Then switch on ignition, read the fault memory again and erase → End
2	Check belt buckle	♦ Switch off ignition ♦ Disconnect the plug connection X16 ♦ Driver's belt buckle not connected ♦ Measure resistance in plug to driver's seat between pin 7 and pin 8	approx. 400 Ω ⇒ Step 3	⇒ Step 7
3	Check belt buckle	♦ Connect belt buckle ♦ Measure resistance in plug to driver's seat between pin B 7 and pin B 8	approx. 100 Ω ⇒ Step 4	⇒ Step 7
4	Check belt buckle wiring for short circuit to B+	♦ Switch on ignition ♦ Check the voltage in plug to driver's seat between pin B7 and ground	0 V ⇒ Step 5	Repair wiring harness → End
5	Check the belt buckle wiring for short circuit to ground	♦ Check the resistance in plug to driver's seat between pin B7 and ground ♦ Driver's belt buckle not connected	∞ Ω ⇒ Step 6	Repair wiring harness → End
6	Inspect the wiring harness to the airbag triggering unit for pinches and chafing damage.		⇒ Step 8	Repair wiring harness → End
7	♦ Replace driver's belt buckle		→ End	
8	♦ Replace triggering unit for airbag		→ End	

Fault codes 47, 48, 49, 51

Passenger's belt buckle

Diagnostic conditions

- Ignition on

Possible cause of fault

- Incorrect coding
- Short circuit to B+/ground or open circuit in the wiring between the passenger's belt buckle and the airbag triggering unit
- Passenger's belt buckle faulty
- Triggering unit for airbag faulty

Note!

- *If the fault memory is cleared, the ignition must be switched off, the ignition key removed and the ignition switched on again in order to check the fault path. Only in this way is another self-test carried out.*
- *When the coding is changed in the menu item "Change coding", the ignition must always be switched off afterwards and the key removed.*
- *After the ignition is switched on again, the new coding from the airbag triggering unit is updated and the stored faults can be erased.*

Affected terminals

Terminals 6 and 8

Diagnosis/troubleshooting

Work instruction			Display OK	If not OK
1	Check coding	♦ Check the belt buckle coding in the menu item "Extract coding "	Only in USA vehicles must the belt buckle be coded "active" ⇒ Step 2	Correct coding, switch off ignition and remove key. Then switch on ignition, read the fault memory again and erase → End
2	Check passenger's belt buckle	♦ Switch off ignition ♦ Disconnect plug connection X17 ♦ Passenger's belt buckle not connected ♦ Measure resistance in plug to passenger's seat between pin 7 and pin 8	approx. 400 Ω ⇒ Step 3	⇒ Step 7
3	Check passenger's belt buckle	♦ Connect passenger's seat buckle ♦ Measure resistance in plug to passenger's seat between pin B 7 and pin B 8	approx. 100 Ω ⇒ Step 4	⇒ Step 7
4	Check the belt bucklewiring for short circuit to B+	♦ Switch on ignition ♦ Check the voltage in plug to passenger's seat between pin B7 and ground	0 V ⇒ Step 5	Repair wiring harness → End
5	Check belt buckle wiring for short circuit to ground	♦ Check the resistance in plug to passenger's seat between pin B7 and ground ♦ Passenger's belt buckle not connected	∞ Ω ⇒ Step 5	Repair wiring harness → End
6	Inspect the wiring harness to the airbag triggering unit for pinches and chafing damage.		⇒ Step 8	Repair wiring harness → End
7	♦ Replace passenger's belt buckle		→ End	
8	♦ Replace triggering unit for airbag		→ End	

Fault codes 52, 85

Driver's side airbag

Diagnostic conditions

- Ignition on

Possible cause of fault

- Short circuit to B+/ground or open circuit in the wiring between the driver's airbag sensor and the airbag triggering unit
- Driver's airbag sensor faulty

Affected terminals

Terminals 17, 18 and 20

Diagnosis/troubleshooting

Work instruction			Display OK	If not OK
1	Check plug connection	• Check whether the plug on the driver's airbag sensor is connected and locked	⇒ Step 2	Connect and lock plugs → End
2	Check wiring harness	• Check wiring between the airbag sensor and airbag triggering unit for pinching and chafing damage	⇒ Step 3	Repair wiring harness → End
3	• Replace driver's airbag sensor		→ End	

Fault code 53

Driver's side airbag

Diagnostic conditions

- Ignition on

Possible cause of fault

- Wrong driver's airbag sensor is installed

Affected terminals

Terminals 5, 6 and 20

Diagnosis/troubleshooting

Work instruction		Display OK	If not OK
3	♦ Replace driver's airbag sensor	→ End	

Fault codes 55, 87

Passenger's side airbag

Diagnostic conditions

- Ignition on

Possible cause of fault

- Short circuit to B+/ground or open circuit in the wiring between the passenger's airbag sensor and the airbag triggering unit
- Passenger's airbag sensor faulty

Affected terminals

Terminals 5, 6 and 21

Diagnosis/troubleshooting

Work instruction			Display OK	If not OK
1	Check plug connection	• Check whether the plug on the passenger's airbag sensor is connected and locked	⇒ Step 2	Connect and lock plugs → End
2	Check wiring harness	• Check wiring between the airbag sensor and airbag triggering unit for pinching and chafing damage	⇒ Step 3	Repair wiring harness → End
3	• Replace passenger's airbag sensor		→ End	

Fault code 56

Passenger's side airbag sensor

Diagnostic conditions

- Ignition on

Possible cause of fault

- Wrong passenger's airbag sensor is installed

Affected terminals

Terminals 5, 6 and 21

Diagnosis/troubleshooting

Work instruction		Display OK	If not OK
1	♦ Replace passenger's airbag sensor	→ End	

Fault codes 70, 71, 72, 73

Child seat detection

Diagnostic conditions

- Ignition on

Possible cause of fault

- Incorrect coding
- Plug connection of child seat detection belt buckle not connected or damaged
- Short circuit to B+/ground or open circuit in the wiring between the airbag triggering unit and the child seat detection belt buckle
- Child seat detection belt buckle faulty

Note!

- *When the coding is changed in the menu item "Change coding", the ignition must always be switched off afterwards and the key removed.*
- *After the ignition is switched on again, the new coding from the airbag triggering unit is updated and the stored faults can be erased.*

Affected terminals

Terminals 6 and 33

Diagnosis/troubleshooting

Work instruction			Display OK	If not OK
1	Check coding	♦ Check in menu item "Extract coding"whether the airbag triggering unit is correctly coded	If a belt buckle for child seat detection is installed, code "child seat detection" "active " If a belt buckle for child seat detection is not installed, code "child seat detection" "not active" ⇒ Step 2	Carry out coding → End
2	Visual inspection	♦ Check whether the plug connection of the child seat detection belt buckle is correctly connected and locked	⇒ Step 3	Properly connect plug connection of child seat detection belt buckle → End
3	Check child seat detection belt buckle	♦ Switch off ignition ♦ Pull off plug on belt buckle for child seat detection ♦ Measure resistance in plug for child seat detection belt buckle between pin 1 and pin 2	Belt buckle of child seat inserted approx. 260 Ω Belt buckle of child seat not inserted approx. 2.26 kΩ ⇒ Step 6	⇒ Step 5
4	Check wiring to control module	♦ Inspect the wiring harness to the airbag triggering unit for pinches and chafing damage	⇒ Step 6	Repair wiring harness → End
5	♦ Replace child seat detection belt buckle		→ End	
6	♦ Replace triggering unit for airbag		→ End	

Fault code 86

Driver's side airbag sensor

Diagnostic conditions

- Ignition on

Possible cause of fault

- Airbag sensor is faulty

Affected terminals

Terminals 17, 18 and 20

Diagnosis/troubleshooting

Work instruction		Display OK	If not OK
1	• Replace driver's airbag sensor	→ End	

Fault code 88

Passenger's side airbag

Diagnostic conditions

- Ignition on

Possible cause of fault

- Airbag sensor is faulty

Affected terminals

Terminals 5, 6 and 21

Diagnosis/troubleshooting

Work instruction		Display OK	If not OK
1	♦ Replace passenger's airbag sensor	→ End	

Fault codes above 100

XXX

Diagnostic conditions

- Ignition on

Possible cause of fault

- Triggering unit for airbag faulty

Note!

Fault codes 100 and higher are internal control module faults. The stored faults cannot be erased.

Affected terminals

-

Diagnosis/troubleshooting

Work instruction		Display OK	If not OK
1	♦ Replace triggering unit for airbag	→ End	

Roll-over protection system UEB 11

Introduction

System UEB 11

911 Turbo Cabriolet as of model year 2004 (4)

Safety notes

Danger of personal injury by remaining within the functioning range of the roll-over bars.

Danger of personal injury by placing objects within the functioning range of the roll-over bars.

The roll-over bars may be triggered accidentally or intentionally during the diagnosis/troubleshooting even if the battery was clamped beforehand.

- ***Before starting the diagnosis/troubleshooting, open the convertible top completely, remove the cover caps and, if necessary, the hardtop from the vehicle.***
- ***Ensure that body parts are kept away from the functioning range of the roll-over bars.***
- ***Ensure that objects are kept away from the functioning range of the roll-over bars.***
- ***During all work and analysis/troubleshooting on the roll-over protection system, roll-over protection must be actuated beforehand and only retracted again when all work is complete. ⇒ chapter "Drive links" in 69-105***

Danger of personal injury from control modules that are not locked.

The roll-over protection system can only be actuated if the control module has been locked.

- ***After installing a new or unlocked control module, do not start the vehicle until the system has been completely installed and the control module has been locked.***

⚠ □□□□□□□

Danger of personal injury from control modules whose transport lock is activated.

The roll-over protection system can only be activated safely when the transport protection system is not activated.

- ***After installing a new control module, do not start the vehicle until the transport protection system has been switched to 'inactive'.***
- ***After transporting a vehicle, do not start the vehicle until the transport protection system has been switched to 'inactive'.***

⚠ □□□□□□□

Danger of personal injury from control modules whose transport lock is activated.

The roll-over protection system can only be activated safely when the transport protection system is activated.

- ***Before removing the control module, remove the vehicle key from the ignition lock and pull off the plug on the control module.***

⚠ □□□□□□□

Danger of damage to goods by transporting vehicles whose transport lock is not activated.

The roll-over protection system can be activated unintentionally if the transport lock is not active during transportation.

- ***Before transporting the vehicle, switch the transport lock to 'active'.***

⚠ □□□□□□□

Danger of damage due to improper handling of batteries and control module plug connections!

This may cause malfunctions and system failures!

- ***Disconnect the battery connection terminals only when the engine is switched off!***
- ***Start the engine only when the battery connection terminals are properly connected!***

- ***Pull off or push on plug connections for the control modules or other electronic components only when the ignition is switched off!***
- ***Protect the plug connections from liquids!***
- ***Remove any penetrating liquids completely by suitable means!***
- ***Disconnect the negative terminal of the battery before welding work commences on the vehicle.***

General information

Observe the following points:

- If it is replaced, the roll-over protection control module must be locked before the first journey ⇒ chapter "Drive links" in □□□□□□.
- In order to test the roll-over protection system and keep it operational, the roll-over bars must be activated at regular intervals (see maintenance instructions).
- After troubleshooting or repairs, erase the fault memory with the Porsche System Tester II No. 9588 and carry out a test drive.
- After the test drive, read out the fault memory with the Porsche System Tester II No. 9588 again.

General information on the fault memory

- The contents of the fault memory are retained even when the unit is removed.
- Faults in the control module can only be erased after an "ignition off - on" reset.

Diagnostic conditions

The fault can only be identified if the requirements listed under Diagnostic conditions are met. For this reason, the specified procedure must be observed after a fault is repaired:

1. Erase fault memory.
2. Satisfy the requirements listed under 'Diagnostic conditions'.
3. Read out fault memory again.

Possible causes of fault

The possible causes that may be responsible for the fault are listed here. Please note that in certain circumstances further faults can be stored in the fault memory after troubleshooting (e.g. if plugs are

disconnected). After carrying out repairs, read out the fault memory of all control modules and erase any faults.

Diagnosis/troubleshooting

- The errors stored are displayed in plain text using the Porsche fault code.
- The fault memory Info key (F8) on the Porsche System Tester II No. 9588 can be used to access the extended fault memory.
  This information should be saved using the (F4) key and printed out. The following information can be displayed:

Fault type

The following fault types are possible:

- — (No details available)
- Leak resistance/short circuit to ground
- Below limit value
- Above limit value

Occurrence of faults

The fault occurred as follows:

- Statically (i.e. once)
- Sporadically (i.e. more than once)

Fault status

The following status types are possible:

- Present (at the time of the last diagnostics routine)
- Not present (at the time of the last diagnostics routine)

Tools

Warning!

Danger of injury when driving and working on the vehicle!

- ***Never hang the Porsche System Tester II No. 9588 over the steering wheel!***
- ***Tools and special tools should in general be kept away from all airbag functioning ranges and the roll-over bar functioning ranges.***

Note!

Porsche System Tester II No. 9588 ►

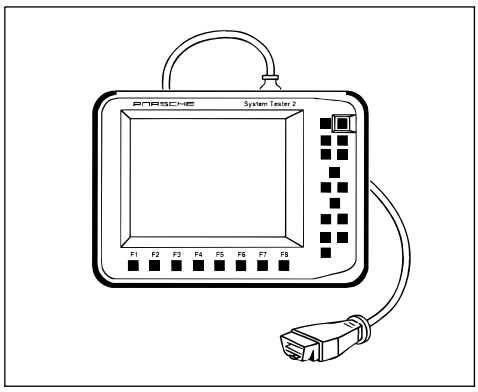

Commercially available digital multimeter ►

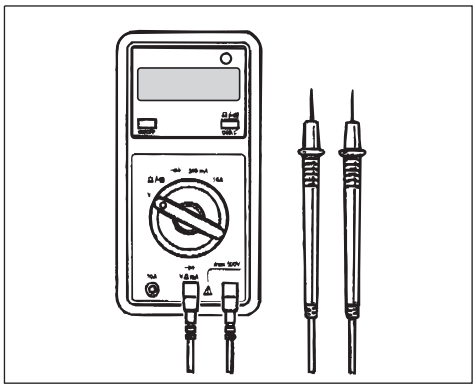

Measurement tool set No. 9684

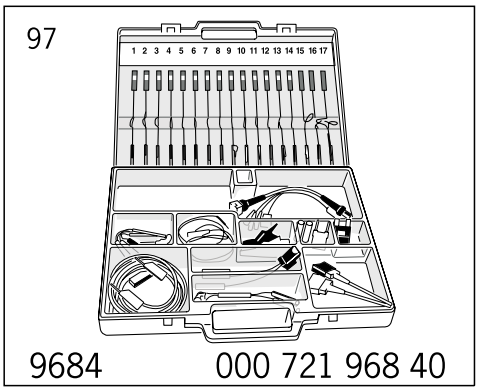

Component arrangement

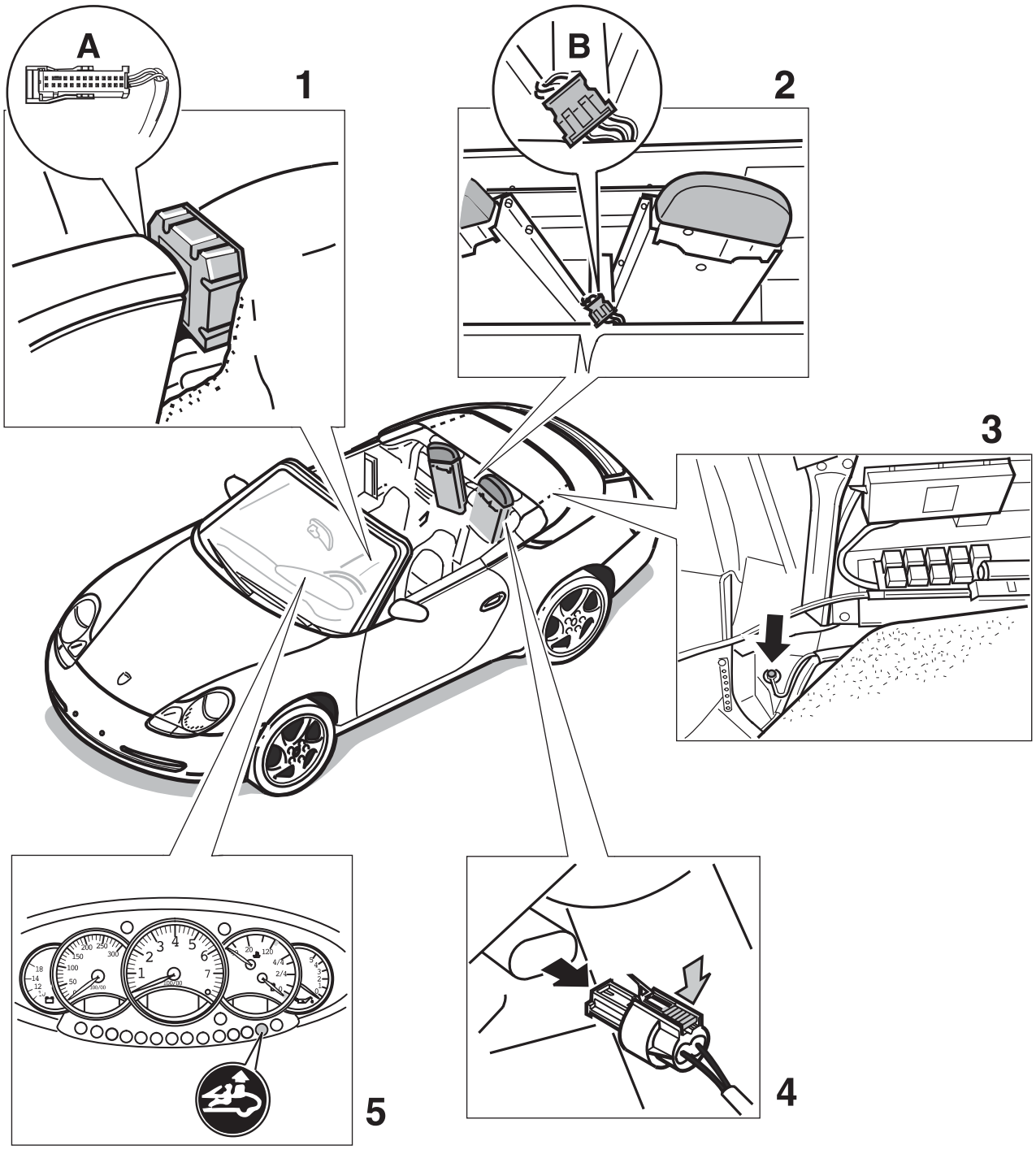

1 - Control module

A - Control module plug

2 - Roll-over bar with auxiliary frame

B - X10 plug connection on auxiliary frame

3 - Ground point 8

4 - Plug connection on roll-over bar

5 - Roll-over protection system warning light

Connector assignment

Control module plugs

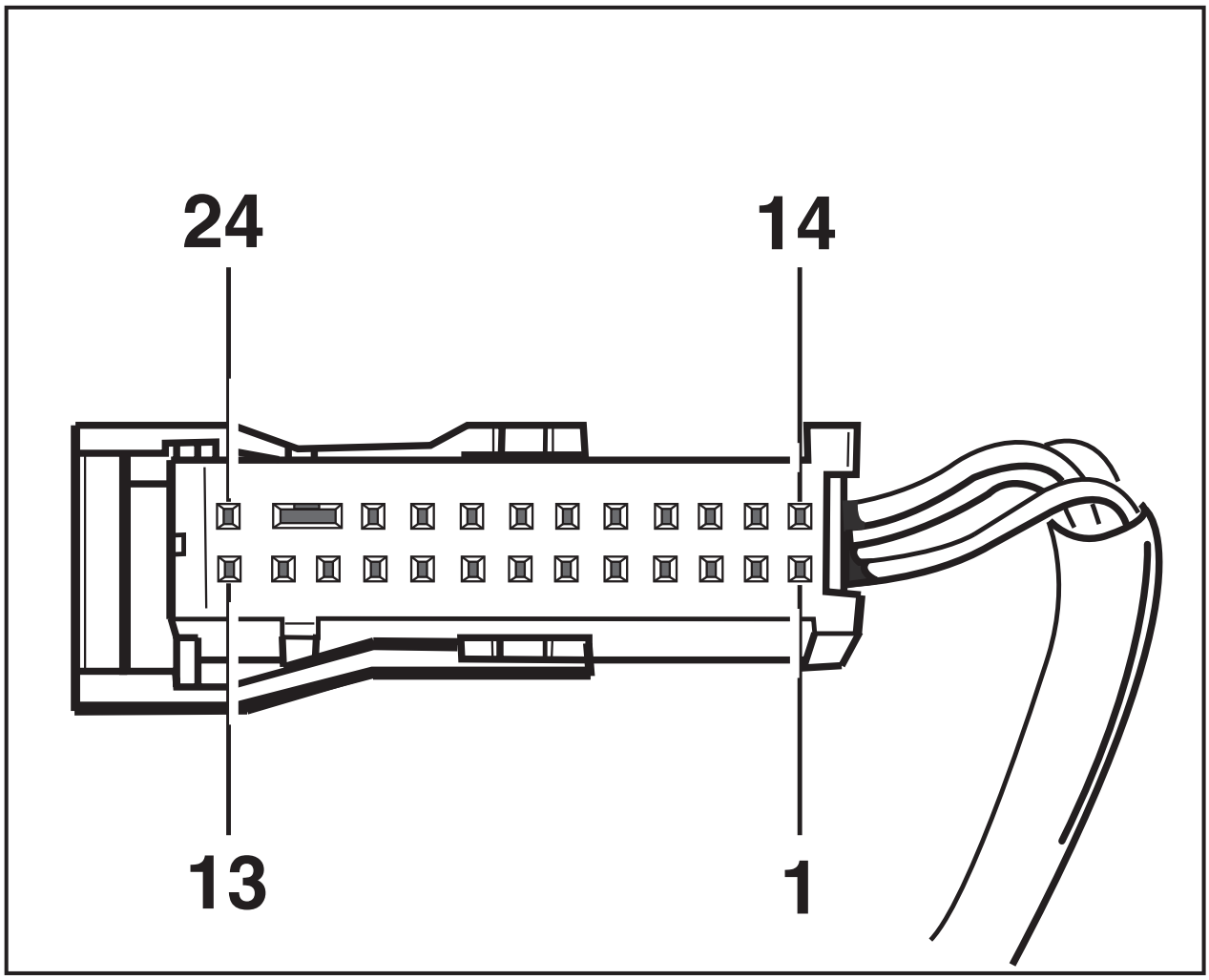

Pin	Designation	Pin	Designation
1	Not used	2	Not used
3	Not used	4	Solenoid 1 (+)
5	Solenoid 1 (-)	6	Not used
7	Not used	8	Not used
9	Not used	10	Not used
11	Ground (terminal 31)	12	Warning light activation
13	Not used	14	Not used
15	Not used	16	Not used
17	Solenoid 2 (+)	18	Not used

Pin	Designation	Pin	Designation
19	Not used	20	Diagnosis (K-line)
21	Solenoid 2 (-)	22	Actuating shaft of the short circuit bridge pin 11/12 (with pin 23)
23	Actuating shaft of the short circuit bridge pin 11/12 (with pin 22)	24	Not used

X10 plug connection

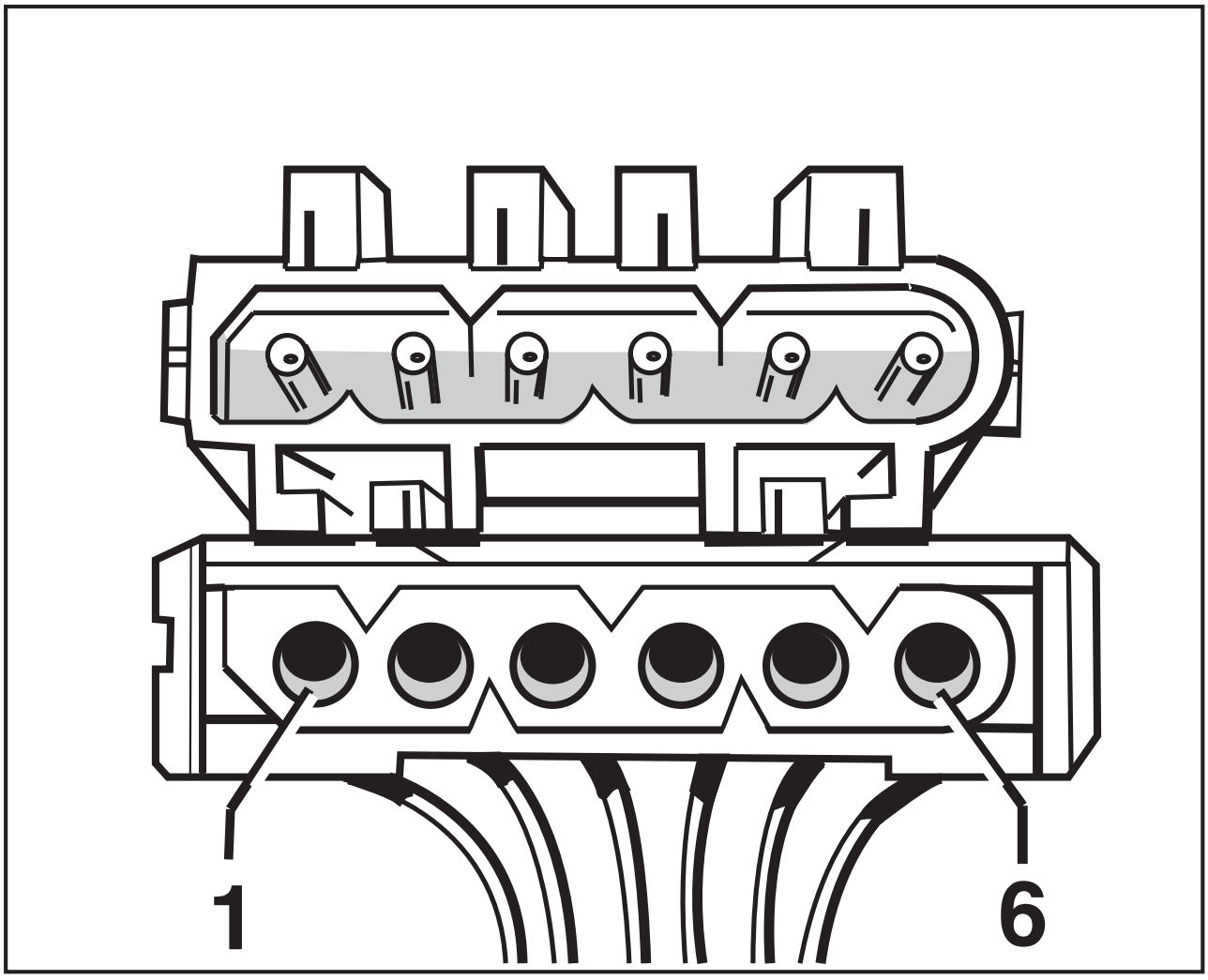

The X10 plug connection is located behind the rear seat backs under the auxiliary frame trim.

Pin	Designation	Pin	Designation
1	Solenoid 1 (-)	2	Solenoid 1 (+)
3	Solenoid 2 (-)	4	Solenoid 2 (+)
5	(Not affected by this system)	6	(Not affected by this system)

Ground point 8

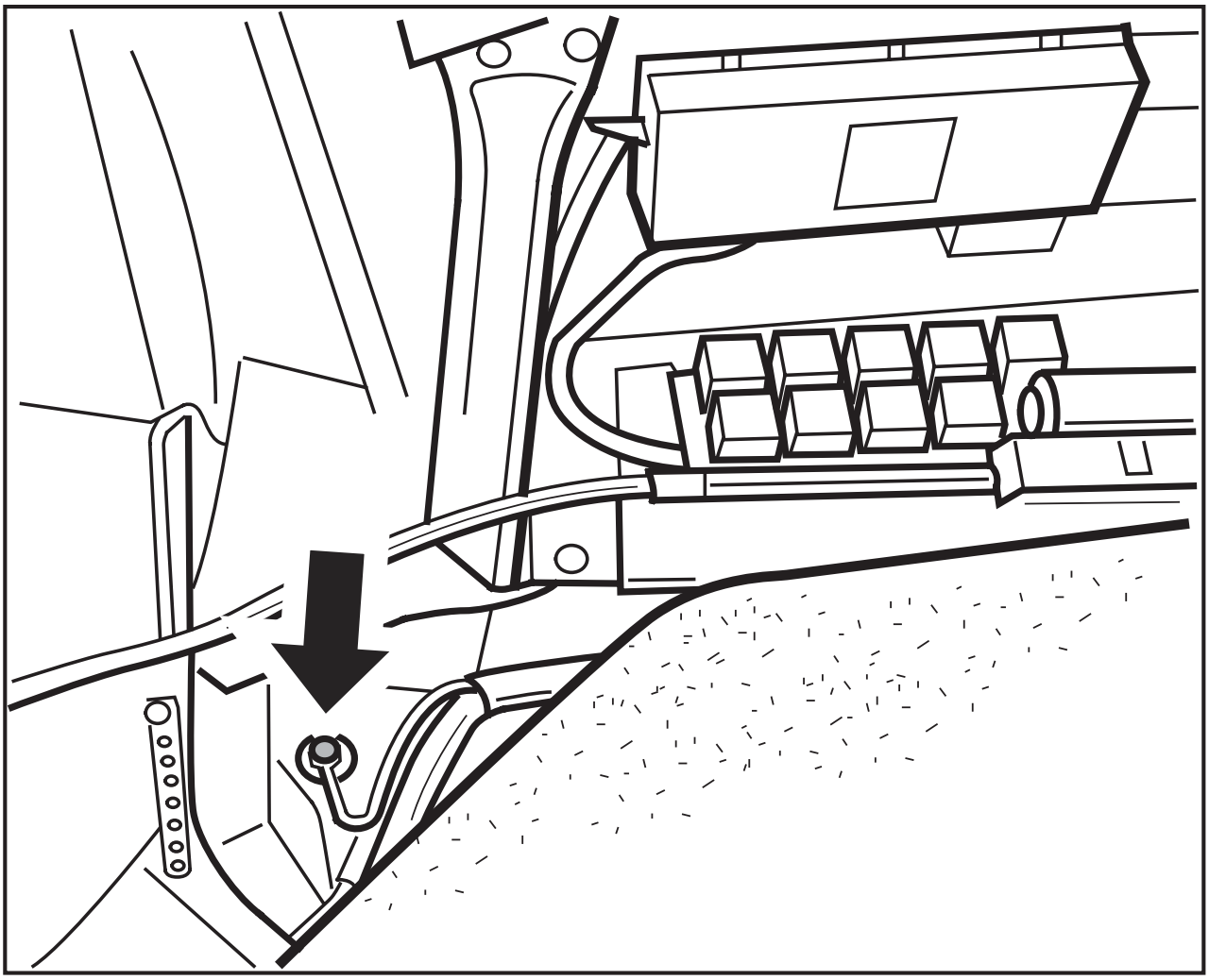

Ground point 8 is located on the left underneath the convertible-top rest near the convertible-top control module.

Control module function

Warning light

The roll-over protection system warning light is illuminated for approx. 5 seconds when the buzzer contact (terminal 86S) is activated. Afterwards it is extinguished once again.

Under the following conditions, the roll-over protection system warning light is illuminated again or does not go out:

- The control module was not 'locked'.
- The transport lock was 'active' in the control module.
- The plug is not engaged in the control module or is engaged incorrectly.
- A fault has been identified and is present in the fault memory.

Replacing control module

Danger!

Danger of personal injury from control modules whose transport lock is activated.

The roll-over protection system can only be activated safely when the transport protection system is activated.

- ***Before removing the control module, remove the vehicle key from the ignition lock and pull off the plug on the control module.***

Danger!

Danger of personal injury from control modules whose transport lock is activated.

The roll-over protection system can only be activated safely when the transport protection system is not activated.

- ***After installing a new control module, do not start the vehicle until the transport protection system has been switched to 'inactive'.***

Danger!

Danger of personal injury from control modules that are not locked.

The roll-over protection system can only be actuated if the control module has been locked.

- ***After installing a new or unlocked control module, do not start the vehicle until the system has been completely installed and the control module has been locked.***

⚠ Caution!

Risk of damage due to corrosion in the plug connections!

This may cause malfunctions and system failures!

- ***Protect the plug connections from liquids!***
- ***Remove any penetrating liquids completely by suitable means!***

Actual values

The operating time and number of bars triggered are indicated in the "Actual values" menu. Once 200 bars have been triggered, fault code 13 'Trigger counter' is set ⇒ chapter "Trigger counter" in **69-123**.

Drive links

The roll-over protection can be triggered with this menu item.

⚠ Danger!

Danger of accidents by remaining within the functioning range of the roll-over bars.

Danger of accidents by placing objects in the functioning range of the roll-over bars.

The roll-over bars may be triggered accidentally or intentionally during the diagnosis/troubleshooting even if the battery was clamped beforehand.

- ***Before starting the diagnosis/troubleshooting, open the convertible top completely, remove the cover caps and, if necessary, the hardtop from the vehicle.***
- ***Ensure that body parts are kept away from the functioning range of the roll-over bars.***

- ***Ensure that objects are kept away from the functioning range of the roll-over bars.***
- ***During all work and analysis/troubleshooting on the roll-over protection system, roll-over protection must be actuated beforehand and only retracted again when all work is complete.***

Procedure:

1. Using the Porsche System Tester II No. 9588, select the menu item 'Drive links'.
2. Activate F2 followed by F8 with a maximum interval of 2 seconds.
3. End process with << key.

Roll-over protection is now extended and can be reset manually ⇒ Rep. Gr. 697219; Removing and installing roll-over protection system.

Events

The event memory can be read out with this menu item.

The number of events and the triggering code are indicated.

Procedure:

1. Using the Porsche System Tester II No. 9588, select the menu item 'Events'.
2. The display can be saved in the working log using the F4 key.
3. End the procedure with the << key.

Transport lock

The status of the transport lock can be read and altered with this menu item.

Danger!

Danger of personal injury from control modules whose transport lock is activated.

The roll-over protection system can only be activated safely when the transport protection system is not activated.

- ***After installing a new control module, do not start the vehicle until the transport protection system has been switched to 'inactive'.***
- ***After transporting a vehicle, do not start the vehicle until the transport protection system has been switched to 'inactive'.***

Danger!

Danger of personal injury from control modules whose transport lock is activated.

The roll-over protection system can only be activated safely when the transport protection system is activated.

- ***Before removing the control module, remove the vehicle key from the ignition lock and pull off the plug on the control module.***

Danger!

Danger of damage when transporting vehicles whose transport lock is not activated.

The roll-over protection system can be activated unintentionally if the transport lock is not active during transportation.

- ***Before transporting the vehicle, switch the transport lock in the control module to 'active'.***

Extracting status of transport lock

Procedure:

1. Using the Porsche System Tester II No. 9588, select the menu item 'Transport lock'.

The current status of the transport lock is indicated ('Transport lock inactive ', or 'Transport lock active').

2. The display can be saved in the working log using the F4 key.
3. End process with << key.

Changing status of transport lock

Procedure:

1. Using the Porsche System Tester II No. 9588, select the menu item 'Transport lock'.

The current status of the transport lock is indicated ('Transport lock inactive ', or 'Transport lock active').

2. The display can be saved in the working log using the F4 key.
3. Then press the >> key.
4. Select the required transport lock status from the menu with the ↑ and ↓ keys.
5. Code the new transport lock status using the F8 key and wait until the display 'Coding modified' appears.
6. End process with << key.

Extract coding

The control module coding can be extracted with this menu item.

The following items are displayed:

'Transport lock'	(e.g. 'inactive')
'Locked by'	XXXXXXX
'Vehicle type'	(e.g. '911 (996)')

Note!

⇒

Procedure:

1. Select the menu item 'Extract coding' using the Porsche System Tester II No. 9588.
2. End the procedure with the << key.

Lock

The control module can be locked with this menu item.

Danger!

Danger of personal injury from control modules that are not locked.

The roll-over protection system can only be actuated if the control module has been locked.

- ***After installing a new or unlocked control module, do not start the vehicle until the system has been completely installed and the control module has been locked.***

Note!

Procedure:

1. Using the Porsche System Tester II No. 9588, select the menu item 'Lock'.
2. Using the ↑ and ↓ keys, select the correct vehicle type and then press >>.
3. Code the new transport lock status using the F8 key and wait until the display 'Control module locked' appears.

Note!

-
-
-
-

4. End process with << key.

Fault overview

□□□□□□ □□□□	□□□□□□□□□□	□□□□□□□□□□□□
1	Roll-over protection warning light	♦ Roll-over protection system deactivated
2	Roll-over protection warning light	♦ Roll-over protection system deactivated
3	Supply voltage	♦ Roll-over protection system deactivated
4	Solenoid 1 and 2 trigger counter	♦ Roll-over protection system deactivated
5	Solenoid 1	♦ Roll-over protection system deactivated
6	Solenoid 1	♦ Roll-over protection system deactivated
7	Solenoid 1	♦ Roll-over protection system deactivated
9	Solenoid 2	♦ Roll-over protection system deactivated
10	Solenoid 2	♦ Roll-over protection system deactivated
11	Solenoid 2	♦ Roll-over protection system deactivated
13	Trigger counter	♦ Roll-over protection system deactivated
20	Spirit level 1	♦ Roll-over protection system deactivated
21	Spirit level 1	♦ Roll-over protection system deactivated
22	Spirit level 1	♦ Roll-over protection system deactivated
23	Spirit level 1	♦ Roll-over protection system deactivated
24	Spirit level 2	♦ Roll-over protection system deactivated
25	Spirit level 2	♦ Roll-over protection system deactivated
26	Spirit level 2	♦ Roll-over protection system deactivated
27	Spirit level 2	♦ Roll-over protection system deactivated
28	Acceleration sensor	♦ Roll-over protection system deactivated
100	Solenoid 1 activation	♦ Roll-over protection system deactivated
101	Solenoid 2 activation	♦ Roll-over protection system deactivated
129	Control module faulty	♦ Roll-over protection system deactivated
195 to 235	Control module faulty	♦ Roll-over protection system deactivated

Fault code 1

Roll-over protection warning light

Diagnostic conditions

- Ignition on

Possible cause of fault

- Short circuit to ground or open circuit in the wiring between warning light and roll-over protection control module
- Roll-over protection warning light faulty
- Roll-over protection control module faulty

Affected pins

Pin 12

Diagnosis/troubleshooting

Danger of personal injury by remaining within the functioning range of the roll-over bars.

Danger of personal injury by placing objects within the functioning range of the roll-over bars.

The roll-over bars may be triggered accidentally or intentionally during the diagnosis/troubleshooting even if the battery was clamped beforehand.

- ***Before starting the diagnosis/troubleshooting, open the convertible top completely, remove the cover caps and, if necessary, the hardtop from the vehicle.***
- ***Ensure that body parts are kept away from the functioning range of the roll-over bars.***

- ***Ensure that objects are kept away from the functioning range of the roll-over bars.***
- ***During all work and analysis/troubleshooting on the roll-over protection system, roll-over protection must be actuated beforehand and only retracted again when all work is complete. ⇒ chapter "Drive links" in 69-105***

□□□□□□□□□□□□□□□			□□□□□□□□□	□□□□□□□□
1	Visual inspection of roll-over protection warning light	♦ Ignition on ♦ Check whether the roll-over protection warning light is permanently on in the instrument cluster	Short circuit to ground ⇒ Step 5	Open circuit ⇒ Step 2
2	Visual inspection of the instrument cluster	♦ Ignition on ♦ Check whether the required indicator lights are on	⇒ Step 3	Open circuit in the instrument cluster (power supply) Continue diagnosis/ troubleshooting in the area of the instrument cluster → End
3	Check ground actuation of roll-over protection control module	♦ Switch ignition off and remove key ♦ Pull plug off the roll-over protection control module ♦ Ignition on ♦ Check whether the roll-over protection warning light is permanently on in the instrument cluster	Roll-over protection warning light is on in the instrument cluster ⇒ Step 11	Roll-over protection warning light is not on in the instrument cluster ⇒ Step 4
4	Check wire between roll-over protection control module and instrument cluster for open circuit	♦ Switch ignition off and remove key ♦ Pull off plug C on instrument cluster ♦ Measure resistance between roll-over protection control module pin 12 and instrument cluster pin C18	< 5 Ω Roll-over protection warning light faulty ⇒ Step 10	Open circuit in wiring between roll-over protection control module and instrument cluster Repair wiring harness → End

5	Visual inspection for short circuit to ground	♦ Switch ignition off and remove key ♦ Pull off plug on roll-over protection control module ♦ Disconnect X10 plug connection ♦ Disconnect connection with ground point 8 on the roll-over protection control module ♦ Ignition on ♦ Check whether the roll-over protection warning light is permanently on in the instrument cluster	Roll-over protection warning light is not on in the instrument cluster ⇒ Step 7	Roll-over protection warning light is on in the instrument cluster ⇒ Step 6
6	Check wires between roll-over protection control module, ground point 8 and instrument cluster for short circuit to ground	♦ Switch ignition off and remove key ♦ Pull off plug C on instrument cluster ♦ Measure resistance between control module plug pin 12 and ground	∞ Ω ⇒ Step 10	Short circuit to ground between roll-over protection control module, ground point 8 and instrument cluster Repair wiring harness → End
7	Visual inspection of the actuating tongue on the roll-over protection control module for the short circuit bridge	♦ Remove roll-over protection control module ⇒ Rep. Gr. 697419; Installing and removing control module for roll-over protection ♦ Check whether the actuating tongue on the roll-over protection control module is present and operational in the area of pins 23/24	⇒ Step 8	Control module faulty ⇒ Step 11
8	Check short circuit bridge in the roll-over protection control module plug	♦ Measure resistance between pin 11 and pin 12 of control module plug	< 5 Ω	Plug faulty ⇒ Step 9
		♦ Carefully insert plastic tongue into the control module plug pins 23/24 ♦ Measure resistance between pin 11 and pin 12 of control module plug	∞ Ω ⇒ Step 11	
9	♦ Replace roll-over protection control module plug		→ End	

10	♦ Repair roll-over protection warning light in the instrument cluster	→ End	
11	♦ Replace roll-over protection control module ⇒ Rep. Gr. 697419; Installing and removing control module for roll-over protection	→ End	

Fault code 2

Roll-over protection warning light

Note!

Diagnostic conditions

- Ignition on

Possible cause of fault

- Short circuit to B+ in the wiring between warning light and roll-over protection control module
- Roll-over protection warning light faulty
- Roll-over protection control module faulty

Affected pins

Pin 12

Diagnosis/troubleshooting

Danger!

Danger of personal injury by remaining within the functioning range of the roll-over bars.

Danger of personal injury by placing objects within the functioning range of the roll-over bars.

The roll-over bars may be triggered accidentally or intentionally during the diagnosis/troubleshooting even if the battery was clamped beforehand.

- ***Before starting the diagnosis/troubleshooting, open the convertible top completely, remove the cover caps and, if necessary, the hardtop from the vehicle.***
- ***Ensure that body parts are kept away from the functioning range of the roll-over bars.***

- ***Ensure that objects are kept away from the functioning range of the roll-over bars.***
- ***During all work and analysis/troubleshooting on the roll-over protection system, roll-over protection must be actuated beforehand and only retracted again when all work is complete. ⇒ chapter "Drive links" in 69-105***

Work instruction			Display OK	If not OK
1	Check wires between roll-over protection control module, ground point 8 and instrument cluster for short circuit to B+	♦ Switch ignition off and remove key ♦ Disconnect X10 plug connection ♦ Disconnect connection at ground point 8 on the roll-over protection control module ♦ Pull off plug on roll-over protection control module ♦ Pull off plug C on instrument cluster ♦ Ignition on ♦ Measure voltage between control module plug pin 12 and ground	< 0.3 V ⇒ Step 2	Short circuit to B+ between roll-over protection control module, ground point 8 and instrument cluster Repair wiring harness → End
2	Check roll-over protection warning light with instrument cluster	♦ Connect plug C to instrument cluster ♦ Using a suitable auxiliary cable in series with a fuse (1 amp), connect control module plug pin 12 to ground ♦ Ignition on ♦ Check whether the roll-over protection warning light is on	Roll-over protection warning light is on in the instrument cluster ⇒ Step 4	Roll-over protection warning light is not on in the instrument cluster Short circuit to B+ in the instrument cluster ⇒ Step 3
3	♦ Repair roll-over protection warning light or instrument cluster		→ End	
4	♦ Replace roll-over protection control module ⇒ Rep. Gr. 697419; Installing and removing control module for roll-over protection		→ End	

Fault code 3

Supply voltage

Diagnostic conditions

- Ignition on for approx. 6 seconds
- Then engine running

Possible cause of fault

- Rusty, loose or faulty connections
- Voltage drops when the vehicle is in motion
- Roll-over protection control module is faulty

Affected pins

Pin 2 and pin 11

Diagnosis/troubleshooting

Danger of personal injury by remaining within the functioning range of the roll-over bars.

Danger of personal injury by placing objects within the functioning range of the roll-over bars.

The roll-over bars may be triggered accidentally or intentionally during the diagnosis/troubleshooting even if the battery was clamped beforehand.

- ***Before starting the diagnosis/troubleshooting, open the convertible top completely, remove the cover caps and, if necessary, the hardtop from the vehicle.***
- ***Ensure that body parts are kept away from the functioning range of the roll-over bars.***
- ***Ensure that objects are kept away from the functioning range of the roll-over bars.***
- ***During all work and analysis/troubleshooting on the roll-over protection system, roll-over protection must be actuated beforehand and only retracted again when all work is complete. ⇒ chapter "Drive links" in 69-105***

♦

♦

1	Visual inspection	♦ Check all plug connections, cables and ground points 8 for rust, tightness and damage	⇒ Step 2	Repair wiring harness → End
2	Check power supply for roll-over protection control module	♦ Switch ignition off and remove key ♦ Pull off plug on roll-over protection control module ♦ Ignition on ♦ Measure voltage between pin 2 and ground	> 11 V ⇒ Step 3	Repair wiring harness → End
		♦ Start engine and allow to run at idle speed ♦ Measure voltage between pin 2 and ground		Repair power supply in vehicle → End
3	Check ground supply for roll-over protection control module	♦ Switch ignition off and remove key ♦ Measure resistance between pin 11 and ground	< 5 Ω ⇒ Step 4	Repair wiring harness → End
4	♦ Replace roll-over protection control module experimentally ⇒ Rep. Gr. 697419; Removing and installing control module for roll-over protection ♦ Perform a test drive ♦ Read out roll-over protection fault memory with the Porsche System Tester II No. 9588		No fault entered → End	Repair power supply in vehicle → End

Fault code 4

Solenoid 1 and 2

Diagnostic conditions

- Ignition on

Possible cause of fault

- Short circuit in wires between solenoid 1 and solenoid 2
- Roll-over protection control module faulty

Affected pins

Pin 4, pin 5, pin 17 and pin 21

Diagnosis/troubleshooting

Danger!

Danger of personal injury by remaining within the functioning range of the roll-over bars.

Danger of personal injury by placing objects within the functioning range of the roll-over bars.

The roll-over bars may be triggered accidentally or intentionally during the diagnosis/troubleshooting even if the battery was clamped beforehand.

- ***Before starting the diagnosis/troubleshooting, open the convertible top completely, remove the cover caps and, if necessary, the hardtop from the vehicle.***
- ***Ensure that body parts are kept away from the functioning range of the roll-over bars.***
- ***Ensure that objects are kept away from the functioning range of the roll-over bars.***
- ***During all work and analysis/troubleshooting on the roll-over protection system, roll-over protection must be actuated beforehand and only retracted again when all work is complete. ⇒ chapter "Drive links" in 69-105***

Work instruction			Display OK	If not OK
1	Check wires between roll-over protection control module and solenoid 1 and solenoid 2 for short circuit	♦ Switch ignition off and remove key ♦ Pull off plug on roll-over protection control module ♦ Measure resistance between pin 4 and pin 17 ♦ Measure resistance between pin 4 and pin 21 ♦ Measure resistance between pin 5 and pin 17 ♦ Measure resistance between pin 5 and pin 21	∞ Ω ⇒ Step 2	Short circuit between roll-over protection control module and solenoid 1 and solenoid 2 Repair wiring harness → End
2	♦ Replace roll-over protection control module ⇒ Rep. Gr. 697419; Installing and removing control module for roll-over protection		→ End	

Fault code 5

Solenoid 1

Diagnostic conditions

- Ignition on

Possible cause of fault

- Short circuit to ground between roll-over protection control unit and solenoid 1
- Solenoid 1 faulty
- Roll-over protection control module faulty

Affected pins

Pin 4 and pin 5

Diagnosis/troubleshooting

Danger of personal injury by remaining within the functioning range of the roll-over bars.

Danger of personal injury by placing objects within the functioning range of the roll-over bars.

The roll-over bars may be triggered accidentally or intentionally during the diagnosis/troubleshooting even if the battery was clamped beforehand.

- ***Before starting the diagnosis/troubleshooting, open the convertible top completely, remove the cover caps and, if necessary, the hardtop from the vehicle.***
- ***Ensure that body parts are kept away from the functioning range of the roll-over bars.***
- ***Ensure that objects are kept away from the functioning range of the roll-over bars.***
- ***During all work and analysis/troubleshooting on the roll-over protection system, roll-over protection must be actuated beforehand and only retracted again when all work is complete. ⇒ chapter "Drive links" in 69-105***

1	Check wires between roll-over protection control module and solenoid 1 for short circuit to ground	♦ Switch ignition off and remove key ♦ Pull off plug on roll-over protection control module ♦ Measure resistance between pin 4 and ground ♦ Measure resistance between pin 5 and ground	∞ Ω ⇒ Step 4	⇒ Step 2
2	Check solenoid 1 for short circuit to ground	♦ Pull off plug on solenoid 1 ♦ Measure resistance between solenoid 1 pin 1 and ground ♦ Measure resistance between solenoid 1 pin 2 and ground	∞ Ω Short circuit to ground between roll-over protection control module and solenoid 1 Repair wiring harness → End	Solenoid 1 faulty ⇒ Step 3
3	♦ Replace roll-over protection bar 1 ⇒ Rep. Gr. 697219; Removing and installing roll-over protection bar		→ End	
4	♦ Replace roll-over protection control module ⇒ Rep. Gr. 697419; Removing and installing control module for roll-over protection		→ End	

Fault code 6

Solenoid 1

Diagnostic conditions

- Ignition on

Possible cause of fault

- Open circuit between roll-over protection control module and solenoid 1
- Solenoid 1 faulty
- Roll-over protection control module faulty

Affected pins

Pin 4 and pin 5

Diagnosis/troubleshooting

Danger of personal injury by remaining within the functioning range of the roll-over bars.

Danger of personal injury by placing objects within the functioning range of the roll-over bars.

The roll-over bars may be triggered accidentally or intentionally during the diagnosis/troubleshooting even if the battery was clamped beforehand.

- ***Before starting the diagnosis/troubleshooting, open the convertible top completely, remove the cover caps and, if necessary, the hardtop from the vehicle.***
- ***Ensure that body parts are kept away from the functioning range of the roll-over bars.***
- ***Ensure that objects are kept away from the functioning range of the roll-over bars.***
- ***During all work and analysis/troubleshooting on the roll-over protection system, roll-over protection must be actuated beforehand and only retracted again when all work is complete. ⇒ chapter "Drive links" in 69-105***

1	Check wires between roll-over protection control module and solenoid 1 for open circuit	♦ Switch ignition off and remove key ♦ Pull off plug on roll-over protection control module ♦ Measure resistance between pin 4 and pin 5	Approx. 3 Ω to 6 Ω (at 20° C) ⇒ Step 4	⇒ Step 2
2	Check solenoid 1 for open circuit	♦ Pull off plug on solenoid 1 ♦ Measure resistance between pin 1 and pin 2 of solenoid 1	Approx. 3 Ω to 6 Ω (at 20° C) Open circuit between roll-over protection control module and solenoid 1 Repair wiring harness → End	Solenoid 1 faulty ⇒ Step 3
3	♦ Replace roll-over bar 1 ⇒ Rep. Gr. 697219; Removing and installing roll-over bar		→ End	
4	♦ Replace roll-over protection control module ⇒ Rep. Gr. 697419; Removing and installing control module for roll-over protection		→ End	

Fault code 7

Solenoid 1

Diagnostic conditions

- Ignition on

Possible cause of fault

- Short circuit to B+ between roll-over protection control module and solenoid 1
- Roll-over protection control module faulty

Affected pins

Pin 4 and pin 5

Diagnosis/troubleshooting

Danger of personal injury by remaining within the functioning range of the roll-over bars.

Danger of personal injury by placing objects within the functioning range of the roll-over bars.

The roll-over bars may be triggered accidentally or intentionally during the diagnosis/troubleshooting even if the battery was clamped beforehand.

- ***Before starting the diagnosis/troubleshooting, open the convertible top completely, remove the cover caps and, if necessary, the hardtop from the vehicle.***
- ***Ensure that body parts are kept away from the functioning range of the roll-over bars.***
- ***Ensure that objects are kept away from the functioning range of the roll-over bars.***
- ***During all work and analysis/troubleshooting on the roll-over protection system, roll-over protection must be actuated beforehand and only retracted again when all work is complete. ⇒ chapter "Drive links" in 69-105***

1	Check wires between roll-over protection control module and solenoid 1 for short circuit to B+	♦ Switch ignition off and remove key ♦ Pull off plug on roll-over protection control module ♦ Ignition on ♦ Measure voltage between pin 4 and ground ♦ Measure voltage between pin 5 and ground	< 0.3 V ⇒ Step 2	Short circuit to B+ between roll-over protection control module and solenoid 1 Repair wiring harness → End
2	♦ Replace roll-over protection control module ⇒ Rep. Gr. 697419; Removing and installing control module for roll-over protection		→ End	

Fault code 9

Solenoid 2

Diagnostic conditions

- Ignition on

Possible cause of fault

- Short circuit to ground between roll-over protection control module and solenoid 2
- Solenoid 2 faulty
- Roll-over protection control module faulty

Affected pins

Pin 17 and pin 21

Diagnosis/troubleshooting

Danger of personal injury by remaining within the functioning range of the roll-over bars.

Danger of personal injury by placing objects within the functioning range of the roll-over bars.

The roll-over bars may be triggered accidentally or intentionally during the diagnosis/troubleshooting even if the battery was clamped beforehand.

- ***Before starting the diagnosis/troubleshooting, open the convertible top completely, remove the cover caps and, if necessary, the hardtop from the vehicle.***
- ***Ensure that body parts are kept away from the functioning range of the roll-over bars.***
- ***Ensure that objects are kept away from the functioning range of the roll-over bars.***
- ***During all work and analysis/troubleshooting on the roll-over protection system, roll-over protection must be actuated beforehand and only retracted again when all work is complete. ⇒ chapter "Drive links" in 69-105***

1	Check wires between roll-over protection control module and solenoid 2 for short circuit to ground	♦ Switch ignition off and remove key ♦ Pull off plug on roll-over protection control module ♦ Measure resistance between pin 17 and ground ♦ Measure resistance between pin 21 and ground	∞ Ω ⇒ Step 4	⇒ Step 2
2	Check solenoid 2 for short circuit to ground	♦ Pull off plug on solenoid 2 ♦ Measure resistance between solenoid 2 pin 1 and ground ♦ Measure resistance between solenoid 2 pin 2 and ground	∞ Ω Short circuit to ground between roll-over protection control module and solenoid 2 Repair wiring harness → End	Solenoid 2 faulty ⇒ Step 3
3	♦ Replace roll-over bar 2 ⇒ Rep. Gr. 697219; Removing and installing roll-over bar		→ End	
4	♦ Replace roll-over protection control module ⇒ Rep. Gr. 697419; Removing and installing control module for roll-over protection		→ End	

Fault code 10

Solenoid 2

Diagnostic conditions

- Ignition on

Possible cause of fault

- Open circuit between roll-over protection control module and solenoid 2
- Solenoid 2 faulty
- Roll-over protection control module faulty

Affected pins

Pin 17 and pin 21

Diagnosis/troubleshooting

Danger!

Danger of personal injury by remaining within the functioning range of the roll-over bars.

Danger of personal injury by placing objects within the functioning range of the roll-over bars.

The roll-over bars may be triggered accidentally or intentionally during the diagnosis/troubleshooting even if the battery was clamped beforehand.

- ***Before starting the diagnosis/troubleshooting, open the convertible top completely, remove the cover caps and, if necessary, the hardtop from the vehicle.***
- ***Ensure that body parts are kept away from the functioning range of the roll-over bars.***
- ***Ensure that objects are kept away from the functioning range of the roll-over bars.***
- ***During all work and analysis/troubleshooting on the roll-over protection system, roll-over protection must be actuated beforehand and only retracted again when all work is complete. ⇒ chapter "Drive links" in 69-105***

Work instruction			Display OK	If not OK
1	Check wiring with solenoid 2 for open circuit	♦ Switch ignition off and remove key ♦ Pull off plug on roll-over protection control module ♦ Measure resistance between pin 17 and pin 21	Approx. 3 Ω to 6 Ω (at 20° C) ⇒ Step 4	⇒ Step 2
2	Check solenoid 2 for open circuit	♦ Pull off plug on solenoid 2 ♦ Measure resistance between pin 1 and pin 2 of solenoid 2	Approx. 3 Ω to 6 Ω (at 20° C) Open circuit between roll-over protection control module and solenoid 2 Repair wiring harness → End	Solenoid 2 faulty ⇒ Step 3
3	♦ Replace roll-over bar 2 ⇒ Rep. Gr. 697219; Removing and installing roll-over bar		→ End	
4	♦ Replace roll-over protection control module ⇒ Rep. Gr. 697419; Removing and installing control module for roll-over protection		→ End	

Fault code 11

Solenoid 2

Diagnostic conditions

- Ignition on

Possible cause of fault

- Short circuit to B+ between roll-over protection control module and solenoid 2
- Roll-over protection control module faulty

Affected pins

Pin 17 and pin 21

Diagnosis/troubleshooting

Work instruction			Display OK	If not OK
1	Check wires between roll-over protection control module and solenoid 2 for short circuit to B+	• Switch ignition off and remove key • Pull off plug on roll-over protection control module • Ignition on • Measure voltage between pin 17 and ground • Measure voltage between pin 21 and ground	< 0.3 V ⇒ Step 2	Short circuit to B+ between roll-over protection control module and solenoid 2 Repair wiring harness → End
2	• Replace roll-over protection control module ⇒ Rep. Gr. 697419; Removing and installing control module for roll-over protection		→ End	

Fault code 13

Trigger counter

Note!

Diagnostic conditions

- Ignition on

Possible cause of fault

- The roll-over bar has been triggered more than 200 times

Affected pins

-

Diagnosis/troubleshooting

Danger!

Danger of personal injury by remaining within the functioning range of the roll-over bars.

Danger of personal injury by placing objects within the functioning range of the roll-over bars.

The roll-over bars may be triggered accidentally or intentionally during the diagnosis/troubleshooting even if the battery was clamped beforehand.

- ***Before starting the diagnosis/troubleshooting, open the convertible top completely, remove the cover caps and, if necessary, the hardtop from the vehicle.***
- ***Ensure that body parts are kept away from the functioning range of the roll-over bars.***
- ***Ensure that objects are kept away from the functioning range of the roll-over bars.***
- ***During all work and analysis/troubleshooting on the roll-over protection system, roll-over protection must be actuated beforehand and only retracted again when all work is complete. ⇒ chapter "Drive links" in 69-105***

Work instruction		Display OK	If not OK
1	♦ Replace roll-over protection control module ⇒ Rep. Gr. 697419; Removing and installing control module for roll-over protection ♦ Replace both roll-over bars ⇒ Rep. Gr. 697219; Installing and removing roll-over bar	→ End	

Fault codes 20, 21, 22, 23

Spirit level 1

Diagnostic conditions

- Ignition on

Possible cause of fault

- Roll-over protection control module faulty

Affected pins

-

Diagnosis/troubleshooting

Danger!

Danger of personal injury by remaining within the functioning range of the roll-over bars.

Danger of personal injury by placing objects within the functioning range of the roll-over bars.

The roll-over bars may be triggered accidentally or intentionally during the diagnosis/troubleshooting even if the battery was clamped beforehand.

- ***Before starting the diagnosis/troubleshooting, open the convertible top completely, remove the cover caps and, if necessary, the hardtop from the vehicle.***
- ***Ensure that body parts are kept away from the functioning range of the roll-over bars.***
- ***Ensure that objects are kept away from the functioning range of the roll-over bars.***
- ***During all work and analysis/troubleshooting on the roll-over protection system, roll-over protection must be actuated beforehand and only retracted again when all work is complete. ⇒ chapter "Drive links" in 69-105***

Work instruction		Display OK	If not OK
1	♦ Replace roll-over protection control module ⇒ Rep. Gr. 697419; Removing and installing control module for roll-over protection	→ End	

Fault codes 24, 25, 26, 27

Spirit level 2

Diagnostic conditions

- Ignition on

Possible cause of fault

- Roll-over protection control module faulty

Affected pins

-

Diagnosis/troubleshooting

Danger!

Danger of personal injury by remaining within the functioning range of the roll-over bars.

Danger of personal injury by placing objects within the functioning range of the roll-over bars.

The roll-over bars may be triggered accidentally or intentionally during the diagnosis/troubleshooting even if the battery was clamped beforehand.

- ***Before starting the diagnosis/troubleshooting, open the convertible top completely, remove the cover caps and, if necessary, the hardtop from the vehicle.***
- ***Ensure that body parts are kept away from the functioning range of the roll-over bars.***
- ***Ensure that objects are kept away from the functioning range of the roll-over bars.***
- ***During all work and analysis/troubleshooting on the roll-over protection system, roll-over protection must be actuated beforehand and only retracted again when all work is complete. ⇒ chapter "Drive links" in 69-105***

Work instruction		Display OK	If not OK
1	♦ Replace roll-over protection control module ⇒ Rep. Gr. 697419; Removing and installing control module for roll-over protection	→ End	

Fault code 28

Acceleration sensor

Diagnostic conditions

- Ignition on

Possible cause of fault

- Roll-over protection control module faulty

Affected pins

-

Diagnosis/troubleshooting

Danger!

Danger of personal injury by remaining within the functioning range of the roll-over bars.

Danger of personal injury by placing objects within the functioning range of the roll-over bars.

The roll-over bars may be triggered accidentally or intentionally during the diagnosis/troubleshooting even if the battery was clamped beforehand.

- ***Before starting the diagnosis/troubleshooting, open the convertible top completely, remove the cover caps and, if necessary, the hardtop from the vehicle.***
- ***Ensure that body parts are kept away from the functioning range of the roll-over bars.***
- ***Ensure that objects are kept away from the functioning range of the roll-over bars.***
- ***During all work and analysis/troubleshooting on the roll-over protection system, roll-over protection must be actuated beforehand and only retracted again when all work is complete. ⇒ chapter "Drive links" in 69-105***

Work instruction		Display OK	If not OK
1	♦ Replace roll-over protection control module ⇒ Rep. Gr. 697419; Removing and installing control module for roll-over protection	→ End	

Fault code 100

Solenoid 1 activation

♦

♦

Diagnostic conditions

- Ignition on

Possible cause of fault

♦ Short circuit to B+/ground/between wires or open circuit in the wires between roll-over protection control module and solenoid 1 at triggering stage

♦ Solenoid 1 faulty

♦ Roll-over protection control module faulty

Affected pins

Pin 4 and pin 5

Diagnosis/troubleshooting

Danger of personal injury by remaining within the functioning range of the roll-over bars.

Danger of personal injury by placing objects within the functioning range of the roll-over bars.

The roll-over bars may be triggered accidentally or intentionally during the diagnosis/troubleshooting even if the battery was clamped beforehand.

- ***Before starting the diagnosis/troubleshooting, open the convertible top completely, remove the cover caps and, if necessary, the hardtop from the vehicle.***
- ***Ensure that body parts are kept away from the functioning range of the roll-over bars.***

- ***Ensure that objects are kept away from the functioning range of the roll-over bars.***
- ***During all work and analysis/troubleshooting on the roll-over protection system, roll-over protection must be actuated beforehand and only retracted again when all work is complete. ⇒ chapter "Drive links" in 69-105***

□□□□□□□□□□□□□□□			□□□□□□□□□	□□□□□□□
1	Check wires between roll-over protection control module and solenoid 1 for short circuit to B+	♦ Switch ignition off and remove key ♦ Pull off plug on roll-over protection control module ♦ Ignition on ♦ Measure voltage between pin 4 and ground ♦ Measure voltage between pin 5 and ground	< 0.3 V ⇒ Step 2	Short circuit to B+ between roll-over protection control module and solenoid 1 Repair wiring harness and continue with ⇒ Step 8
2	Check wires between roll-over protection control module and solenoid 1 for short circuit to ground	♦ Switch ignition off and remove key ♦ Measure resistance between pin 4 and ground ♦ Measure resistance between pin 5 and ground	∞ Ω ⇒ Step 4	⇒ Step 3
3	Check solenoid 1 for short circuit to ground	♦ Pull off plug on solenoid 1 ♦ Measure resistance between solenoid 1 pin 1 and ground ♦ Measure resistance between solenoid 1 pin 2 and ground	∞ Ω Short circuit to ground between roll-over protection control module and solenoid 1 Repair wiring harness Continue with ⇒ Step 8	Solenoid 1 faulty ⇒ Step 7
4	Check wires between roll-over protection control module and solenoid 1 for short circuit between the wires	♦ Pull off plug on solenoid 1 ♦ Measure resistance between pin 4 and pin 5	∞ Ω ⇒ Step 5	Short circuit in wires between roll-over protection control module and solenoid 1 Repair wiring harness Continue with ⇒ Step 8

5	Check wires between roll-over protection control module and solenoid 1 for open circuit	♦ Measure resistance between control module plug pin 4 and solenoid 1 pin 2 ♦ Measure resistance between control module plug pin 5 and solenoid 1 pin 1	< 5 Ω ⇒ Step 6	Open circuit between roll-over protection control module and solenoid 1 Repair wiring harness Continue with ⇒ Step 8
6	Check solenoid 1 for open circuit	♦ Measure resistance between pin 1 and pin 2 of solenoid 1	Approx. 4 Ω to 6 Ω (at 20° C) Open circuit between roll-over protection control module and solenoid 1 Repair wiring harness Continue with ⇒ Step 8	Solenoid 1 faulty ⇒ Step 7
7	♦ Replace roll-over bar 1 ⇒ Rep. Gr. 697219; Removing and installing roll-over bar		Continue with ⇒ Step 8	
8	♦ Replace roll-over protection control module ⇒ Rep. Gr. 697419; Removing and installing control module for roll-over protection		→ End	

Fault code 101

Solenoid 2 activation

□□□□□

♦

♦

Diagnostic conditions

- Ignition on

Possible cause of fault

- ♦ Short circuit to B+/ground/between wires or open circuit in wiring between roll-over protection control module and solenoid 2 at triggering stage
- ♦ Solenoid 2 is faulty
- ♦ Roll-over protection control module is faulty

Affected pins

Pin 17 and pin 21

Diagnosis/troubleshooting

□□□□□□□

Danger of personal injury by remaining within the functioning range of the roll-over bars.

Danger of personal injury by placing objects within the functioning range of the roll-over bars.

The roll-over bars may be triggered accidentally or intentionally during the diagnosis/troubleshooting even if the battery was clamped beforehand.

- ***Before starting the diagnosis/troubleshooting, open the convertible top completely, remove the cover caps and, if necessary, the hardtop from the vehicle.***
- ***Ensure that body parts are kept away from the functioning range of the roll-over bars.***

- ***Ensure that objects are kept away from the functioning range of the roll-over bars.***
- ***During all work and analysis/troubleshooting on the roll-over protection system, roll-over protection must be actuated beforehand and only retracted again when all work is complete. ⇒ chapter "Drive links" in 69-105***

□□□□□□□□□□□□□□□			□□□□□□□□□	□□□□□□□
1	Check wires between roll-over protection control module and solenoid 2 for short circuit to B+	♦ Switch ignition off and remove key ♦ Pull off plug on roll-over protection control module ♦ Ignition on ♦ Measure voltage between pin 17 and ground ♦ Measure voltage between pin 21 and ground	< 0.3 V ⇒ Step 2	Short circuit to B+ between roll-over protection control module and solenoid 2 Repair wiring harness Continue with ⇒ Step 8
2	Check wires between roll-over protection control module and solenoid 2 for short circuit to ground	♦ Switch ignition off and remove key ♦ Measure resistance between pin 17 and ground ♦ Measure resistance between pin 21 and ground	∞ Ω ⇒ Step 4	⇒ Step 3
3	Check solenoid 2 for short circuit to ground	♦ Pull off plug on solenoid 2 ♦ Measure resistance between solenoid 2 pin 1 and ground ♦ Measure resistance between solenoid 2 pin 2 and ground	∞ Ω Short circuit to ground between roll-over protection control module and solenoid 2 Repair wiring harness Continue with ⇒Step 8	Solenoid 2 faulty ⇒ Step 7
4	Check wires between roll-over protection control module and solenoid 2 for short circuit between the wires	♦ Pull off plug on solenoid 2 ♦ Measure resistance between pin 17 and pin 21	∞ Ω ⇒ Step 5	Short circuit in wires between roll-over protection control module and solenoid 2 Repair wiring harness Continue with ⇒Step 8

5	Check wires between roll-over protection control module and solenoid 2 for open circuit	♦ Measure resistance between control module plug pin 17 and solenoid 2 pin 2 ♦ Measure resistance between control module plug pin 21 and solenoid 2 pin 1	< 5 Ω ⇒ Step 6	Open circuit between roll-over protection control module and solenoid 2 Repair wiring harness Continue with ⇒Step 8
6	Check solenoid 2 for open circuit	♦ Measure resistance between pin 1 and pin 2 of solenoid 2	Approx. 4 Ω to 6 Ω (at 20° C) Open circuit between roll-over protection control module and solenoid 2 Repair wiring harness Continue with ⇒Step 8	Solenoid 2 faulty ⇒ Step 7
7	♦ Replace roll-over bar 1 ⇒ Rep. Gr. 697219; Removing and installing roll-over bar		Continue with ⇒ Step 8	
8	♦ Replace roll-over protection control module ⇒ Rep. Gr. 697419; Removing and installing control module for roll-over protection		→ End	

All fault codes 129 to 235

Control module faulty

Diagnostic conditions

- Ignition on

Possible cause of fault

♦ Roll-over protection control module is faulty

Affected pins

-

Diagnosis/troubleshooting

Danger!

Danger of personal injury by remaining within the functioning range of the roll-over bars.

Danger of personal injury by placing objects within the functioning range of the roll-over bars.

The roll-over bars may be triggered accidentally or intentionally during the diagnosis/troubleshooting even if the battery was clamped beforehand.

- ***Before starting the diagnosis/troubleshooting, open the convertible top completely, remove the cover caps and, if necessary, the hardtop from the vehicle.***
- ***Ensure that body parts are kept away from the functioning range of the roll-over bars.***
- ***Ensure that objects are kept away from the functioning range of the roll-over bars.***
- ***During all work and analysis/troubleshooting on the roll-over protection system, roll-over protection must be actuated beforehand and only retracted again when all work is complete. ⇒ chapter "Drive links" in 69-105***

Work instruction		Display OK	If not OK
1	♦ Replace roll-over protection control module ⇒ Rep. Gr. 697419; Removing and installing control module for roll-over protection	→ End	

Seat memory S02; S03;

Introduction

The manual contains the diagnosis for the following system:

Seat memory system S02; S03;

General instructions/safety instructions

The following points must be observed during vehicle diagnosis:

- The stored seat and mirror positions are retained after the battery is disconnected.
- After the battery is connected, volatile memories must be re-programmed. In the case of radio coding and tuning, the customer must be informed of decoding and the deleted tuner memory.
- After the battery has been connected, the instructions in the assembly ⇒ 9; Rep. Gr. - ; Work instructions after disconnecting the battery must be observed.
- After troubleshooting or repairs, erase the fault memory with the 9588 Porsche System Tester II and then read out the fault memory again.

Caution!

Danger of injury and damage due to improper handling of the battery and control module connectors!

- ***Never disconnect battery with engine running.***
- ***Never start engine unless battery is connected securely.***
- ***Never pull off or push on plug connections for the control modules or other electronic components when the ignition is switched on.***

General information on the fault memory

Fault code setting conditions

Fault codes can be set in several circumstances,

e.g.:

- Power failure
- Plug connections disconnected

In these situations, no fault is present in the system and the fault memory must be erased.

Fault memory Info key F8

The Info key F8 has no function in the 'Seat memory' system. The additional information appears together with the fault code and fault text, e.g. '8 Hall-effect sensor for fore-and-aft adjustment - open circuit, present'. The fault memory content is updated (changes from present to not present) only when the switch for the memory seat adjustment or the switch for seat adjustment is actuated.

Tools

The following testers are required for vehicle diagnosis:

Danger!

Danger of injury through triggering of driver's airbag

- ***Never hang the 9588 Porsche System Tester II over the steering wheel.***
- ***Always place tools and special tools outside the functioning range of all airbags!***

Note!

Plug contacts are optimally designed to suit the plug system. Operations on pins can cause contact problems. Only use suitable measurement tools, adapter plugs and test cables.

9588 Porsche System Tester II ►

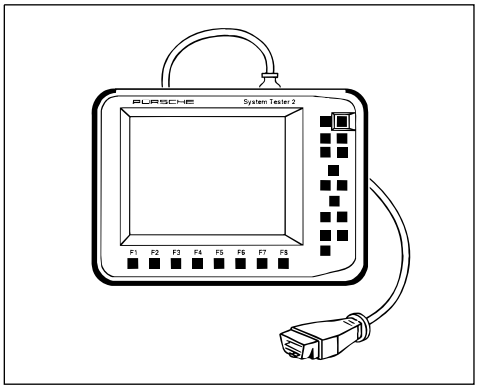

Commercially available digital multimeter ►

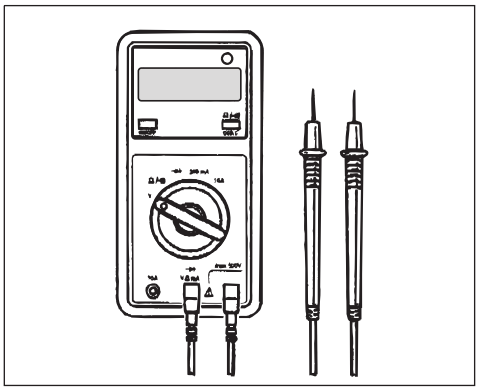

9684 Measurement tool set

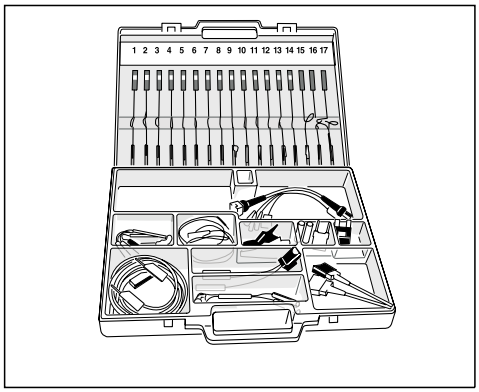

Component arrangement

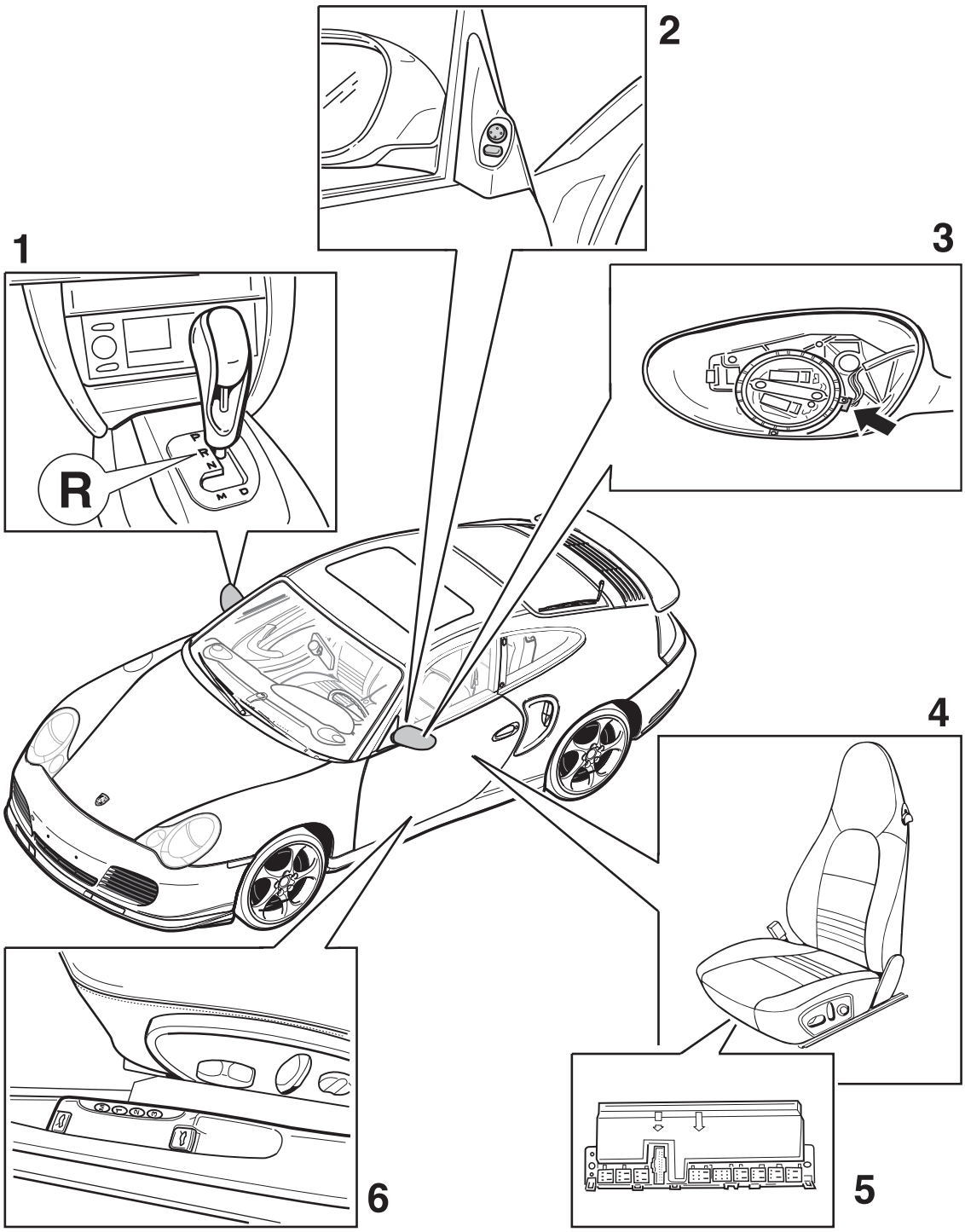

1 - Parking aid, left-hand drive vehicle

2 - Rearview mirror

3 - Carrier with gear unit

4 - Front seats

5 - Control module

6 - Switch for memory seat adjustment

Connector assignment

Connector assignment for seat memory control module

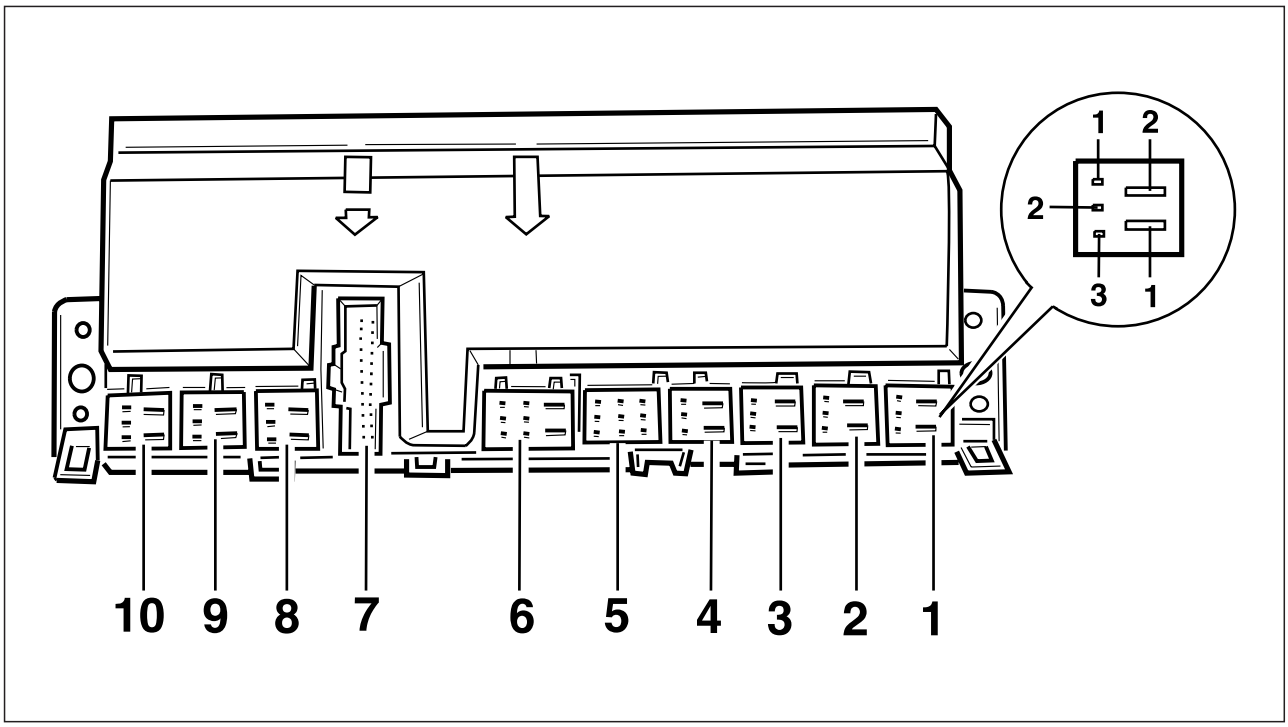

Plug 1, 5-pin

Pin	Designation	Pin	Designation
1,2	Electric motor for backrest adjustment Load circuit	2,3	Hall-effect sensor, backrest Signal circuit

Plug 2, 5-pin

Pin	Designation	Pin	Designation
1,2	Electric motor for height adjustment, rear Load circuit	2,3	Hall-effect sensor for height adjustment, rear Signal circuit

Plug 3, 5-pin

Pin	Designation	Pin	Designation
1,2	Electric motor for height adjustment, front Load circuit	2,3	Hall-effect sensor for height adjustment, front Signal circuit

Plug 4, 5-pin

Pin	Designation	Pin	Designation
1,2	Electric motor for seat adjustment (fore-and-aft) Load circuit	2,3	Hall-effect sensor for seat adjustment Signal circuit

Plug 5, 9-pin

Pin	Designation
Switch for seat adjustment	

Plug 6, 8-pin

Pin	Designation	Pin	Designation
B1	Terminal 31 load	D1	Diagnosis
B2	Terminal 30 load	D2	Door contact
C1	Terminal 30		
C2	Terminal 15		
C3	Terminal 31		

Plug 7, 26-pin

Pin	Designation	Pin	Designation
A1	Switch for memory seat adjustment (P3)	A14	Switch for memory seat adjustment (P2)
A2	Switch for memory seat adjustment (MEM)	A15	Switch for memory seat adjustment (P1)
A3	GFM connection	A16	Not used
A4	System ground pot., rearview mirror	A17	Not used
A5	+ 5 V potentiometer, rearview mirror	A18	Interface, alarm system control module Seat memory data
A6	Voltage pot. right (left/right)	A19	Not used
A7	Voltage pot. right (up/down)	A20	Not used
A8	Not used	A21	Left motor (left/right)
A9	Not used	A22	Left motor (up/down)
A10	Voltage pot. left (left/right)	A23	Not used
A11	Voltage pot. left (up/down)	A24	Not used
A12	Reverse-gear signal	A25	Right motor (left/right)

Plug 7, 26-pin

Pin	Designation	Pin	Designation
A13	Common rearview mirror motor connection	A26	Right motor (up/down)

Plug 8, 5-pin

Pin	Designation	Pin	Designation
1	Valve, lower lumbar (on)	1	Lumbar, pump
2	Valve, upper lumbar (off)	2	Lumbar, pump
3	Valve, lower lumbar (off)		

Plug 9, 5-pin

Pin	Designation	Pin	Designation
1	+ 5 V pressure sensor	2	Valve, upper lumbar (on)
2	Signal, pressure sensor		
3	Ground, pressure sensor		

Control unit function

Modifying coding

Caution!

Risk of damage to backrest if automatic lumbar control is performed after unlocking the vehicle with hand-held transmitter

- ***After replacing the control module, deactivate the required lumbar position in the "Modify coding" menu item.***

The following settings can be selected in the menu and coded using the "Modify coding" menu item:

Coding	Setting	Function
Upper lumbar	Present/not present	
Lower lumbar	Present/not present	
Required position for lumbar	Activated/deactivated	Depending on the coding, the required lumbar position is activated or deactivated when the vehicle is unlocked using the hand-held transmitter. If the required lumbar position is coded to "deactivated", only the stored seat and mirror positions are set when the vehicle is unlocked using the hand-held transmitter.
Parking aid on rearview mirror	Right/left	Depending on the coding, the right or left rearview mirror is lowered by the set angle when reverse gear is engaged with the parking aid active.
Lowering	10 to 120 degrees Factory setting: 32	Lowering angle of the coded rearview mirror
Delay for reverse gear	0 to 5,100 ms Factory setting: 1,280 ms	Delay time after which the rearview mirror lowers when reverse gear is engaged.
Parking aid for position button 1	Activated/deactivated	Parking aid is activated/deactivated for position button 1 (switch for memory seat adjustment).
Parking aid for position button 2	Activated/deactivated	Parking aid is activated/deactivated for position button 2 (switch for memory seat adjustment).
Parking aid for position button 3	Activated/deactivated	Parking aid is activated/deactivated for position button 3 (switch for memory seat adjustment).

Coding	Setting	Function
Parking aid for key 1	Activated/deactivated	Parking aid is activated/deactivated for key 1 (hand-held transmitter).
Parking aid for key 2	Activated/deactivated	Parking aid is activated/deactivated for key 2 (hand-held transmitter).
Parking aid for key 3	Activated/deactivated	Parking aid is activated/deactivated for key 3 (hand-held transmitter).
Parking aid for key 4	Activated/deactivated	Parking aid is activated/deactivated for key 4 (hand-held transmitter).
Required position for key 1	Valid/invalid	Automatic seat and mirror adjustment is activated/deactivated for key 1 (hand-held transmitter).
Required position for key 2	Valid/invalid	Automatic seat and mirror adjustment is activated/deactivated for key 2 (hand-held transmitter).
Required position for key 3	Valid/invalid	Automatic seat and mirror adjustment is activated/deactivated for key 3 (hand-held transmitter).
Required position for key 4	Valid/invalid	Automatic seat and mirror adjustment is activated/deactivated for key 4 (hand-held transmitter).

Communication with alarm system control module

The two control modules 'seat memory' and 'alarm system' communicate via a signal lead. This makes it possible to adjust the mirror and seat positions via hand-held transmitter. If required positions of the rearview mirrors and driver's seat are assigned to a hand-held transmitter, the rearview mirrors and driver's seat move to these positions as soon as the vehicle is unlocked with the hand-held transmitter.

The communication lead between the two control modules can be checked for signs of an open circuit using the 9588 Porsche System Tester II. To do this, proceed as follows:

1. Connect the 9588 Porsche System Tester II and switch on the ignition.
2. Select 'Seat memory' control module.
3. Select 'Alarm system interface level' in the 'Input signals' menu item.
4. Press the Locked/Unlocked button on the hand-held transmitter.

The switch position on the 9588 Porsche System Tester II is closed briefly.

Note!

The adjustment function via the hand-held transmitter is correct only if the radio code and the transponder code of a hand-held transmitter are each stored at the same position in the alarm system control module.

Activating/deactivating the parking aid

Note!

- *This function is only available in vehicles with seat memory!*
- *The parking aid can be activated/deactivated with or without the 9588 Porsche System Tester II!*

General

The automatic lowering of the passenger-side rearview mirror aids the driver during parking manoeuvres. After a time delay which can be set, the rearview mirror is lowered by the set value as soon as reverse gear is engaged. If reverse gear is disengaged or the rearview mirror switch touched with reverse gear still engaged, the rearview mirror returns to its stored position.

The following settings can be selected in the menu and coded using the 9588 Porsche System Tester II:

- Parking aid (activated or deactivated)
- Parking aid on rearview mirror (right or left)
- Lowering
- Delay

Note!

The parking aid can be activated or deactivated for the individual position buttons (1, 2 or 3) or for individual hand-held transmitters.

Activating the parking aid for a position button (switch for memory seat adjustment) without the 9588 Porsche System Tester II

1. Switch on ignition.
2. Engage reverse gear.
3. Adjust both rearview mirrors to desired positions.
4. Adjust seat to desired position.

5. Set desired lumbar positions.
6. Save seat position.

– Press (M) and corresponding position button ((1), (2) or (3)) simultaneously.

Note!

- *The parking aid is activated for the seat position that was stored!*
- *Activation of the parking aid must be carried out individually for every seat position!*

Activating the parking aid for a hand-held transmitter without the 9588 Porsche System Tester II

Note!

With this method, automatic seat and mirror adjustment by means of the hand-held transmitter is activated in addition to the parking aid function for the key in the ignition lock.

1. Switch the ignition on using the desired key.
2. Engage reverse gear.
3. Adjust both rearview mirrors to desired positions.
4. Adjust seat to desired position.
5. Save seat position.

– Press button (M) and, within 5 seconds, press the 'locking button' on the hand-held transmitter of the key in the ignition lock.

Note!

- *The parking aid and seat and mirror adjustment by means of the hand-held transmitter will function correctly only if the radio code and transponder code of the hand-held transmitter are each stored at the same position in the alarm system control module.*
- *The positions of the radio and transponder codes can be read out under the 'Learning functions', 'Remote control' or 'Transponder key' menu item after the 'key learning code' is entered.*

Deactivating the parking aid for a position button (switch for memory seat adjustment) without the 9588 Porsche System Tester II

1. Switch on ignition.
2. Disengage reverse gear if necessary.
3. Adjust both rearview mirrors to desired positions.

4. Adjust seat to desired position.
5. Save seat position.

– Press M and corresponding seat memory position button (1, 2 or 3) simultaneously.

Note!

The parking aid is now deactivated for the respective seat position!

Deactivating the parking aid for a hand-held transmitter without the 9588 Porsche System Tester II

1. Switch the ignition on using the desired key.
2. Disengage reverse gear if necessary.
3. Adjust both rearview mirrors to desired positions.
4. Adjust seat to desired position.
5. Save seat position.

– Press button M and, within 5 seconds, press the 'locking button' on the hand-held transmitter of the key in the ignition lock.

Note!

- *The parking aid is now deactivated for the key (hand-held transmitter) in the ignition lock.*
- *Automatic seat and mirror adjustment with the hand-held transmitter is retained with this method.*

Deactivating automatic seat and mirror adjustment for a hand-held transmitter without the 9588 Porsche System Tester II

1. Switch the ignition on using the desired key.
2. Press position buttons 1 and 3 simultaneously.

Note!

Automatic seat and mirror adjustment is deactivated for the hand-held transmitter in the ignition lock.

Activating the parking aid for a position button (switch for memory seat adjustment) with the 9588 Porsche System Tester II

1. Connect the 9588 Porsche System Tester II with the ignition off, then switch the ignition on.

2. Switch on the 9588 Porsche System Tester II and wait for the start-up screen.
3. Press the [>>] key to go to the next level.
4. Select the vehicle type 911 Turbo (996) in the left-hand window using the [v] key.
5. Press the [- - >] key to activate the right-hand window.
6. Press the [v] key to select the Seat memory control module and press the [>>] key to go to the next level.
7. Press the [v] key to select Modify coding and press the [>>] key to go to the next level.
8. Press the [v]/[^] key to select the menu item –Parking aid for position 1– or –Parking aid for position 2– or –Parking aid for position 3–.
9. Press the [>>] key to change the coding.
10. Select the menu item -activated- using the [v]/[^] key.
11. Press [F8] (coding).

Note!

The parking aid is now activated for the respective seat position!

Deactivating the parking aid for a position button (switch for memory seat adjustment) with the 9588 Porsche System Tester II

1. Connect the 9588 Porsche System Tester II with the ignition off, then switch the ignition on.
2. Switch on the 9588 Porsche System Tester II and wait for the start-up screen.
3. Press the [>>] key to go to the next level.
4. Select the vehicle type 911 Turbo (996) in the left-hand window using the [v] key.
5. Press the [- - >] key to activate the right-hand window.
6. Press the [v] key to select the "Seat memory" control module and press the [>>] key to go to the next level.
7. Press the [v] key to select Modify coding and press the [>>] key to go to the next level.
8. Press the [v]/[^] key to select the menu item –Parking aid for position 1–, –Parking aid for position 2– or –Parking aid for position 3–.

9. Press the [>>] key to change the coding.
10. Select the menu item -deactivated- using the [v]/[^] key.
11. Press [F8] (coding).

Note!

The parking aid is now deactivated for the respective seat position!

Activating the parking aid for a hand-held transmitter with the 9588 Porsche System Tester II

1. Connect the 9588 Porsche System Tester II with the ignition off, then switch the ignition on using the desired key.
2. Switch on the 9588 Porsche System Tester II and wait for the start-up screen.
3. Press the [>>] key to go to the next level.
4. Select the vehicle type 911 Turbo (996) in the left-hand window using the [v] key.
5. Press the [- - >] key to activate the right-hand window.
6. Press the [v] key to select the Seat memory control module and press the [>>] key to go to the next level.
7. Press the [v] key to select Modify coding and press the [>>] key to go to the next level.
8. Use the [v]/[^] key to select the menu item 'Parking aid for key 1', 'Parking aid for key 2', 'Parking aid for key 3' or 'Parking aid for key 4'.
9. Press the [>>] key to change the coding.
10. Select the menu item 'activated' using the [v]/[^] key.
11. Press [F8] (coding).

Deactivating the parking aid for a hand-held transmitter with the 9588 Porsche System Tester II

1. Connect the 9588 Porsche System Tester II with the ignition off, then switch the ignition on.
2. Switch on the 9588 Porsche System Tester II and wait for the start-up screen.
3. Press the [>>] key to go to the next level.
4. Select the vehicle type 911 Turbo (996) in the left-hand window using the [v] key.

5. Press the [- - >] key to activate the right-hand window.
6. Press the [v] key to select the "Seat memory" control module and press the [>>] key to go to the next level.
7. Press the [v] key to select Modify coding and press the [>>] key to go to the next level.
8. Use the [v]/[^] key to select the menu item 'Parking aid for key 1', 'Parking aid for key 2', 'Parking aid for key 3' or 'Parking aid for key 4'.
9. Press the [>>] key to change the coding.
10. Select the menu item 'deactivated' using the [v]/[^] key.
11. Press [F8] (coding).

Activating automatic seat/mirror adjustment via hand-held transmitter with the 9588 Porsche System Tester II

1. Connect the 9588 Porsche System Tester II with the ignition off, then switch the ignition on.
2. Switch on the 9588 Porsche System Tester II and wait for the start-up screen.
3. Press the [>>] key to go to the next level.
4. Select the vehicle type 911 Turbo (996) in the left-hand window using the [v] key.
5. Press the [- - >] key to activate the right-hand window.
6. Press the [v] key to select the "Seat memory" control module and press the [>>] key to go to the next level.
7. Press the [v] key to select 'Modify coding' and press the [>>] key to go to the next level.
8. Use the [v]/[^] key to select the menu item 'Required position for key 1', 'Required position for key 2', 'Required position for key 3' or 'Required position for key 4'.
9. Press the [>>] key to change the coding.
10. Select the menu item 'valid' using the [v]/[^] key.
11. Press [F8] (coding).

Note!

Automatic seat and mirror adjustment is now activated for the selected key (hand-held transmitter).

Deactivating automatic seat/mirror adjustment via hand-held transmitter with the 9588 Porsche System Tester II

1. Connect the 9588 Porsche System Tester II with the ignition off, then switch the ignition on.
2. Switch on the 9588 Porsche System Tester II and wait for the start-up screen.
3. Press the [>>] key to go to the next level.
4. Select the vehicle type 911 Turbo (996) in the left-hand window using the [v] key.
5. Press the [v] key to select the "Seat memory" control module and press the [>>] key to go to the next level.
6. Press the [v] key to select 'Modify coding' and press the [>>] key to go to the next level.
7. Use the [v]/[^] key to select the menu item 'Required position for key 1', 'Required position for key 2', 'Required position for key 3' or 'Required position for key 4'.
8. Press the [>>] key to change the coding.
9. Select the menu item 'invalid' using the [v]/[^] key.
10. Press [F8] (coding).

Note!

Automatic seat and mirror adjustment is now deactivated for the selected key (hand-held transmitter).

Selecting rearview mirror lowering, left/right

Note!

The rearview mirror (left/right) can only be set using the 9588 Porsche System Tester II!

1. Connect the 9588 Porsche System Tester II with the ignition off, then switch the ignition on.
2. Switch on the 9588 Porsche System Tester II and wait for the start-up screen.
3. Press the [>>] key to go to the next level.
4. Select the vehicle type 911 Turbo (996) in the left-hand window using the [v] key.
5. Press the [-->] key to activate the right-hand window.

6. With the [v]/[^] key, select the Seat memory control module and press the [>>] key to go to the next level.
7. Select the menu item –Parking aid on rearview mirror– using the [^]/[^] key.
8. Press the [>>] key to go to the next level.
9. Select the desired rearview mirror –right– or –left– using the [v]/[^] key.
10. Press [F8] (coding).

Note!

The selected rearview mirror is now activated!

Setting the lowering angle of the passenger's rearview mirror

Note!

The lowering angle of the passenger's rearview mirror can only be set using the 9588 Porsche System Tester II!

1. Connect the 9588 Porsche System Tester II with the ignition off, then switch the ignition on.
2. Switch on the 9588 Porsche System Tester II and wait for the start-up screen.
3. Press the [>>] key to go to the next level.
4. Select the vehicle type 911 Turbo (996) in the left-hand window using the [v] key.
5. Press the [-->] key to activate the right-hand window.
6. Press the [v] key to select the "Seat memory" control module and press the [>>] key to go to the next level.
7. Press the [v] key to select Modify coding and press the [>>] key to go to the next level.
8. Select the menu item -Lowering- using the [v]/[^] key.
9. Press the [>>] key to change the coding.
10. Adjust the lowering angle using the [v]/[^] key.
11. Press [F8] (coding).

Note!

The lowering angle is now set!

Fault overview

Fault code	Fault text	Fault effect
1	Control module faulty (main relay does not drop out)	No adjustment
2	Control module faulty (main relay does not pick up)	No adjustment
3	Control module faulty (A/D converter faulty)	No adjustment
4	EEPROM fault (checksum)	Default values
5	EEPROM fault, Required position 1 (checksum)	No automatic adjustment possible
6	EEPROM fault, Required position 2 (checksum)	No automatic adjustment possible
7	EEPROM fault, Required position 3 (checksum)	No automatic adjustment possible
8	Hall-effect sensor for fore-and-aft adjustment - open circuit	No automatic adjustment possible, manual only 500 ms
9	Hall-effect sensor for fore-and-aft adjustment - short circuit	No automatic adjustment possible, manual only 500 ms
10	Hall-effect sensor for backrest adjustment - open circuit	No automatic adjustment possible, manual only 500 ms
11	Hall-effect sensor for backrest adjustment - short circuit	No automatic adjustment possible, manual only 500 ms
12	Hall-effect sensor for front height adjustment - open circuit	No automatic adjustment possible, manual only 500 ms
13	Hall-effect sensor for front height adjustment - short circuit	No automatic adjustment possible, manual only 500 ms
14	Hall-effect sensor for rear height adjustment - open circuit	No automatic adjustment possible, manual only 500 ms
15	Hall-effect sensor for rear height adjustment - short circuit	No automatic adjustment possible, manual only 500 ms
18	Lumbar pressure sensor - open circuit	No automatic lumbar adjustment possible
19	Lumbar pressure sensor - short circuit	No automatic lumbar adjustment possible
20	Pot. mirror right horizontal - open circuit	No automatic adjustment possible
21	Pot. mirror right horizontal - short circuit	No automatic adjustment possible
22	Pot. mirror right vertical - open circuit	No automatic adjustment possible
23	Pot. mirror right vertical - short circuit	No automatic adjustment possible
24	Pot. mirror left horizontal - open circuit	No automatic adjustment possible
25	Pot. mirror left horizontal - short circuit	No automatic adjustment possible
26	Pot. mirror left vertical - open circuit	No automatic adjustment possible
27	Pot. mirror left vertical - short circuit	No automatic adjustment possible
32	Button M, 1, 2, 3 or operating buttons actuated for longer than 60 seconds	Switch is ignored; all further adjustments are jerky

Fault code 1

Control module faulty (main relay does not drop out)

Diagnostic conditions

- Ignition on
- Switch for memory seat adjustment actuated

Possible cause of fault

- Temporary system error
- Control module faulty

Affected terminals

-

Diagnosis/troubleshooting

Work instruction		Display OK	If not OK
1	Erase fault memory	⇒ Step 2	
2	Read out fault memory	Fault code 1 is no longer present ⇒ Step 3	Fault code 1 is still present ⇒ Step 4
3	Check function of system components	→ End	⇒ Step 4
4	Replace control module	→ End	

Fault code 2

Control module faulty (main relay does not pick up)

Diagnostic conditions

- Ignition on
- Switch for memory seat adjustment actuated

Possible cause of fault

- Fuse E3 defective
- Temporary system error
- Control module faulty

Affected terminals

-

Diagnosis/troubleshooting

Work instruction		Display OK	If not OK
1	Check fuse E3	⇒ Step 2	Replace fuse E3 → End
2	Erase fault memory	⇒ Step 3	
3	Read out fault memory	Fault code 2 is no longer present ⇒ Step 4	Fault code 2 is still present ⇒ Step 5
4	Check function of system components	→ End	
5	Replace control module	→ End	

Fault code 3

A/D converter faulty

Diagnostic conditions

- Ignition on
- Switch for memory seat adjustment actuated

Possible cause of fault

- Control module faulty

Affected terminals

-

Diagnosis/troubleshooting

Work instruction		Display OK	If not OK
1	Erase fault memory	⇒ Step 2	
2	Read out fault memory	Fault code 3 is no longer present⇒ Step 3	Fault code 3 is still present ⇒ Step 4
3	Check function of system components	→ End	
4	Replace control module	→ End	

Fault code 4

EEPROM fault (checksum)

Diagnostic conditions

- Ignition on
- Switch for memory seat adjustment actuated

Possible cause of fault

- Control module faulty

Affected terminals

-

Diagnosis/troubleshooting

Work instruction		Display OK	If not OK
1	Replace control module	→ End	

Fault code 5

Required position 1 (checksum)

Diagnostic conditions

- Ignition on
- Switch for memory seat adjustment actuated

Possible cause of fault

- Control module faulty

Affected terminals

-

Diagnosis/troubleshooting

Work instruction		Display OK	If not OK
1	Replace control module	→ End	

Fault code 6

Required position 2 (checksum)

Diagnostic conditions

- Ignition on
- Switch for memory seat adjustment actuated

Possible cause of fault

- Control module faulty

Affected terminals

-

Diagnosis/troubleshooting

Work instruction		Display OK	If not OK
1	Replace control module	→ End	

Fault code 7

Required position 3 (checksum)

Diagnostic conditions

- Ignition on
- Switch for memory seat adjustment actuated

Possible cause of fault

♦ Control module faulty

Affected terminals

-

Diagnosis/troubleshooting

Work instruction		Display OK	If not OK
1	Replace control module	→ End	

Fault code 8

Hall-effect sensor for fore-and-aft adjustment - open circuit

Diagnostic conditions

- Ignition on
- Switch for memory seat adjustment actuated

Possible cause of fault

- Open circuit in supply lead to hall-effect sensor for fore-and-aft adjustment
- Hall-effect sensor faulty
- Control module faulty

Affected terminals

Plug 4, terminals 2 and 3

Diagnosis/troubleshooting

Work instruction			Display OK	If not OK
1	Visual inspection	♦ Check plug 4 for contact and damage	⇒ Step 2	Repair plug or wiring harness → End
2	Check supply lead of the sensor	♦ Check supply lead to the sensor for damage	⇒ Step 3	Repair wiring harness → End
3	♦ Replace electric motor for seat adjustment	→ End		

Fault code 9

Hall-effect sensor for fore-and-aft adjustment - short circuit

Diagnostic conditions

- Ignition on
- Switch for memory seat adjustment actuated

Possible cause of fault

- Short circuit in supply lead to hall-effect sensor
- Hall-effect sensor faulty
- Control module faulty

Affected terminals

Plug 4, terminals 2 and 3

Diagnosis/troubleshooting

Work instruction			**Display OK**	**If not OK**
1	Check plug and sensor supply lead	♦ Pull plug for fore-and-aft adjustment off the control module. ♦ Check plug for corrosion. ♦ Check supply lead for signs of damage.	⇒ Step 2	Repair plug or wiring harness. → End
2	♦ Replace electric motor for seat adjustment		→ End	⇒ Step 3
3	♦ Replace control module		→ End	

Fault code 10

Hall-effect sensor for backrest adjustment - open circuit

Diagnostic conditions

- Ignition on
- Switch for memory seat adjustment actuated

Possible cause of fault

- Open circuit in supply lead to hall-effect sensor for backrest adjustment
- Hall-effect sensor faulty
- Control module faulty

Affected terminals

Plug 1, terminals 2 and 3

Diagnosis/troubleshooting

Work instruction			Display OK	If not OK
1	Check control module plug	♦ Check control module plug for contact and damage	⇒ Step 2	Repair plug → End
2	Check supply lead of the sensor	♦ Check supply lead to the sensor for damage	⇒ Step 3	Repair wiring harness → End
3	♦ Replace electric motor for backrest adjustment		→ End	

Fault code 11

Hall-effect sensor for backrest adjustment - short circuit

Diagnostic conditions

- Ignition on
- Switch for memory seat adjustment actuated

Possible cause of fault

- Short circuit in supply lead to hall-effect sensor
- Hall-effect sensor faulty
- Control module faulty

Affected terminals

Plug 1, terminals 1 and 2

Diagnosis/troubleshooting

Work instruction			Display OK	If not OK
1	Check control module plug and supply lead	♦ Check plug for contact and damage ♦ Check plug for corrosion ♦ Check supply lead for signs of damage	⇒ Step 2	Repair plug or wiring harness → End
2	♦ Replace electric motor for backrest adjustment		→ End	⇒ Step 3
3	♦ Replace control module		→ End	

Fault code 12

Hall-effect sensor for front height adjustment - open circuit

Diagnostic conditions

- Ignition on
- Switch for memory seat adjustment actuated

Possible cause of fault

- Open circuit in supply lead to hall-effect sensor for front height adjustment
- Hall-effect sensor faulty
- Control module faulty

Affected terminals

Plug 3, terminals 2 and 3

Diagnosis/troubleshooting

Work instruction			Display OK	If not OK
1	Check control module plug	♦ Check plug 3 for contact and damage	⇒ Step 2	Repair plug → End
2	Check supply lead of the sensor	♦ Check supply lead to the sensor for damage	⇒ Step 3	Repair wiring harness→ End
3	♦ Replace electric motor for front height adjustment		→ End	⇒ Step 4
4	♦ Replace control module		→ End	

Fault code 13

Hall-effect sensor for front height adjustment - short circuit

Diagnostic conditions

- Ignition on
- Switch for memory seat adjustment actuated

Possible cause of fault

- Short circuit in supply lead to hall-effect sensor for front height adjustment
- Hall-effect sensor faulty
- Control module faulty

Affected terminals

Plug 3, terminals 2 and 3

Diagnosis/troubleshooting

Work instruction			Display OK	If not OK
1	Check the plug	♦ Check plug 3 for contact and damage	⇒ Step 2	Repair plug → End
2	Check supply lead of the sensor	♦ Check supply lead to the sensor for damage	⇒ Step 3	Repair wiring harness → End
3	♦ Replace electric motor for front height adjustment		→ End	⇒ Step 4
4	♦ Replace control module		→ End	

Fault code 14

Hall-effect sensor for rear height adjustment - open circuit

Diagnostic conditions

- Ignition on
- Switch for memory seat adjustment actuated

Possible cause of fault

- Open circuit in supply lead to hall-effect sensor for rear height adjustment
- Hall-effect sensor faulty
- Control module faulty

Affected terminals

Plug 2, terminals 2 and 3

Diagnosis/troubleshooting

Work instruction			Display OK	If not OK
1	Check control module plug	♦ Check control module plug for contact and damage	⇒ Step 2	Repair plug → End
2	Check supply lead of the sensor	♦ Check supply lead to the sensor for damage	⇒ Step 3	Repair wiring harness → End
3	♦ Replace electric motor for rear height adjustment		→ End	⇒ Step 4
4	♦ Replace control module		→ End	

Fault code 15

Hall-effect sensor for rear height adjustment - short circuit

Diagnostic conditions

- Ignition on
- Switch for memory seat adjustment actuated

Possible cause of fault

- Short circuit in supply lead to hall-effect sensor for rear height adjustment
- Hall-effect sensor faulty
- Control module faulty

Affected terminals

Plug 2, terminals 2 and 3

Diagnosis/troubleshooting

Work instruction			Display OK	If not OK
1	Check the plug	♦ Check plug 2 for contact and damage	⇒ Step 2	Repair plug → End
2	Check supply lead of the sensor	♦ Check supply lead to the sensor for damage	⇒ Step 3	Repair wiring harness → End
3	♦ Replace electric motor for rear height adjustment		→ End	⇒ Step 4
4	♦ Replace control module		→ End	

Fault code 18

Lumbar pressure sensor - open circuit

Diagnostic conditions

- Ignition on
- Switch for memory seat adjustment actuated

Possible cause of fault

- Short circuit to ground/open circuit in pressure sensor supply lead
- Pressure sensor faulty
- Control module faulty

Affected terminals

Plug 9, pins 1, 2 and 3

Diagnosis/troubleshooting

Work instruction			**Display OK**	**If not OK**
1	Visual inspection	♦ Check plug 9 on control module for corrosion and contact. ♦ Check supply lead on plug 9 for damage.	⇒ Step 2	Connect plug 9 or repair wiring harness. → End
2	Check power supply of the sensor	♦ Switch off ignition. ♦ Pull off plug on lumbar adjustment device (pressure sensor). ♦ Measure voltage between pin 1 and ground.	Approx. 5 V ⇒ Step 3	⇒ Step 5
3	Check ground lead of the sensor	♦ Measure voltage on plug of lumbar adjustment device (pressure sensor), between pins 1 and 3.	Approx. 5 V ⇒ Step 4	⇒ Step 7
4	Check signal lead of the sensor	♦ Select 'Pressure sensor voltage' in the Actual values menu item. ♦ Connect jumper between pins 1 and 2.	0 V without jumper and approx. 5 V with jumper. ⇒ Step 10	⇒ Step 8

Work instruction			Display OK	If not OK
5	Check supply lead of the sensor for open circuit	♦ Switch off ignition. ♦ Pull plug 9 off the control module. ♦ Measure resistance between plug 9 pin 1 on the control module and pin 1 of plug on the lumbar adjustment device (pressure sensor).	< 5 Ω ⇒ Step 6	Repair wiring harness. → End
6	Check supply lead of the sensor for short to ground	♦ Measure resistance between plug 9 pins 1 and 3 on the control module. ♦ Measure resistance on plug 9 between pin 1 and ground.	∞ Ω ⇒ Step 11	Repair wiring harness. → End
7	Check ground lead of the sensor for open circuit	♦ Pull plug 9 off the control module. ♦ Measure resistance between plug 9 pin 3 on the control module and pin 3 of plug on the lumbar adjustment device (pressure sensor).	< 5 Ω ⇒ Step 11	Repair wiring harness. → End
8	Check signal lead of sensor for short circuit to ground	♦ Pull plug 9 off the control module. ♦ Measure resistance between plug 9 on control module pin 2 and ground. ♦ Measure resistance between plug 9 pins 2 and 3 on the control module.	∞ Ω ⇒ Step 9	Repair wiring harness. → End
9	Check signal lead of the sensor for open circuit	♦ Measure resistance between plug 9 pin 2 on the control module and pin 2 of plug on the lumbar adjustment device (pressure sensor).	< 5 Ω ⇒ Step 11	Repair wiring harness. → End
10	Replace lumbar adjustment device		End	
11	Replace control module		End	

Fault code 19

Lumbar pressure sensor - short circuit

Diagnostic conditions

- Ignition on
- Switch for memory seat adjustment actuated

Possible cause of fault

- Short circuit to voltage/ground or open circuit in pressure sensor supply lead
- Pressure sensor faulty
- Control module faulty

Affected terminals

Plug 9, pins 1, 2 and 3

Diagnosis/troubleshooting

Work instruction			**Display OK**	**If not OK**
1	Visual inspection	♦ Check plug 9 on control module for corrosion and contact. ♦ Check supply lead on plug 9 for damage.	⇒ Step 2	Connect plug 9 or repair wiring harness. → End
2	Check power supply of the sensor	♦ Switch off ignition. ♦ Pull off plug on lumbar adjustment device (pressure sensor). ♦ Measure voltage between pin 1 and ground.	Approx. 5 V ⇒ Step 3	⇒ Step 5
3	Check ground lead of the sensor	♦ Measure voltage on plug of lumbar adjustment device (pressure sensor), between pins 1 and 3.	Approx. 5 V ⇒ Step 4	⇒ Step 8
4	Check signal lead of the sensor	♦ Select 'Pressure sensor voltage' in the Actual values menu item. ♦ Connect jumper between pins 1 and 2.	0 V without jumper Approx. 5 V with jumper ⇒ Step 12	⇒ Step 9

Work instruction			Display OK	If not OK
5	Check supply lead of the sensor for short circuit to B+	♦ Pull plug 9 off the control module. ♦ Switch on ignition. ♦ Measure voltage between plug 9 on control module pin 1 and ground.	0 V ⇒ Step 6	Repair wiring harness. → End
6	Check supply lead of the sensor for short circuit to ground	♦ Switch off ignition. ♦ Measure resistance between plug 9 pins 1 and 3 on the control module. ♦ Measure resistance between plug 9 on control module pin 1 and ground.	∞ Ω ⇒ Step 7	Repair wiring harness. → End
7	Check supply lead of the sensor for open circuit	♦ Measure resistance between plug 9 pin 1 on the control module and pin 1 of plug on the lumbar adjustment device (pressure sensor).	< 5 Ω ⇒ Step 13	Repair wiring harness. → End
8	Check ground lead of the sensor for open circuit	♦ Pull plug 9 off the control module. ♦ Measure resistance between plug 9 pin 3 on the control module and pin 3 of plug on the lumbar adjustment device (pressure sensor).	< 5 Ω ⇒ Step 13	Repair wiring harness. → End
9	Check signal lead of sensor for short circuit to ground	♦ Pull plug 9 off the control module. ♦ Measure resistance between plug 9 on control module pin 2 and ground. ♦ Measure resistance between plug 9 pins 2 and 3 on the control module.	∞ Ω ⇒ Step 10	Repair wiring harness. → End
10	Check signal lead of sensor for short circuit to B+	♦ Switch on ignition. ♦ Measure voltage between plug 9 on the control module pin 2 and ground.	0 V ⇒ Step 11	Repair wiring harness. → End
11	Check signal lead of the sensor for open circuit	♦ Switch off ignition. ♦ Measure resistance between plug 9 pin 2 on the control module and pin 2 of plug on the lumbar adjustment device (pressure sensor).	< 5 Ω ⇒ Step 13	Repair wiring harness. → End
12	Replace lumbar adjustment device		→ End	
13	Replace control module		→ End	

Fault code 20

Pot. mirror right horizontal - open circuit

Diagnostic conditions

- Ignition on
- Switch for memory seat adjustment actuated

Possible cause of fault

- Open circuit in supply lead to pot. for right rearview mirror
- Potentiometer faulty
- Control module faulty

Affected terminals

Plug 7, terminals 4, 5 and 6

Diagnosis/troubleshooting

Work instruction			**Display OK**	**If not OK**
1	Check 5 V supply voltage of 'carrier with gear unit'	♦ Switch off ignition. ♦ Pull off plug on 'carrier with gear unit'. ♦ Switch on ignition. ♦ Measure voltage between pin 3 and ground.	Approx. 5 V ⇒ Step 2	⇒ Step 4
2	Check ground lead of 'carrier with gear unit'	♦ Measure voltage between pins 3 and 7 on plug of 'carrier with gear unit'.	Approx. 5 V ⇒ Step 3	⇒ Step 7
3	Check signal lead of 'carrier with gear unit'	♦ Select 'Voltage of right horizontal mirror potentiometer' in the Actual values menu item. ♦ Connect jumper between pins 3 and 5.	0 V without jumper Approx. 5 V with jumper ⇒ Step 11	⇒ Step 8
4	Check 5 V supply line for short circuit to ground	♦ Switch off ignition. ♦ Pull off 'mirror plug' on control module. ♦ Measure resistance between plug on carrier pin 3 and ground. ♦ Measure resistance between plug on carrier pin 3 and pin 7.	∞ Ω ⇒ Step 5	Repair wiring harness. → End

Work instruction			Display OK	If not OK
5	Check 5 V supply line for short circuit to B+	♦ Switch on ignition. ♦ Measure voltage between pin 5 and ground on 'carrier with gear unit'.	0 V ⇒ Step 6	Repair wiring harness. → End
6	Check 5 V supply line for open circuit	♦ Switch off ignition. ♦ Measure resistance between pin 5 of mirror plug on control module and pin 5 of 'carrier with gear unit'.	< 5 Ω ⇒ Step 12	Repair wiring harness. → End
7	Check ground lead for open circuit	♦ Switch off ignition. ♦ Pull off 'mirror plug' on control module. ♦ Measure resistance between pin 4 of mirror plug and pin 7 of plug on 'carrier with gear unit'.	< 5 Ω ⇒ Step 12	Repair wiring harness. → End
8	Check signal lead for short circuit to ground	♦ Switch off ignition. ♦ Pull plug off the control module. ♦ Measure resistance between plug on 'carrier with gear unit' pin 5 and ground. ♦ Measure resistance between pins 5 and 7 of plug on 'carrier with gear unit'.	∞ Ω ⇒ Step 9	Repair wiring harness. → End
9	Check signal lead for short circuit to B+	♦ Switch on ignition. ♦ Measure voltage between plug on 'carrier with gear unit' pin 5 and ground.	0 V ⇒ Step 10	Repair wiring harness. → End
10	Check signal lead for open circuit	♦ Switch off ignition. ♦ Measure resistance between pin 5 of plug on 'carrier with gear unit' and pin 6 of 'mirror plug' on control module.	< 5 Ω ⇒ Step 12	Repair wiring harness. → End
11	♦ Replace 'carrier with gear unit'		→ End	
12	♦ Replace control module		→ End	

Fault code 21

Pot. mirror right horizontal - short circuit

Diagnostic conditions

- Ignition on
- Switch for memory seat adjustment actuated

Possible cause of fault

- Short circuit in supply lead to pot. for right rearview mirror
- Potentiometer faulty
- Control module faulty

Affected terminals

Plug 7, terminals 4, 5 and 6

Diagnosis/troubleshooting

Work instruction			**Display OK**	**If not OK**
1	Check 5 V supply voltage of 'carrier with gear unit'	♦ Switch off ignition. ♦ Pull off plug on 'carrier with gear unit'. ♦ Switch on ignition. ♦ Measure voltage between pin 3 and ground.	Approx. 5 V ⇒ Step 2	⇒ Step 4
2	Check ground lead of 'carrier with gear unit'	♦ Measure voltage between pins 3 and 7 on plug of 'carrier with gear unit'.	Approx. 5 V ⇒ Step 3	⇒ Step 7
3	Check signal lead of 'carrier with gear unit'	♦ Select 'Voltage of right horizontal mirror potentiometer' in the Actual values menu item. ♦ Connect jumper between pins 3 and 5.	Approx. 5 V ⇒ Step 11	⇒ Step 8
4	Check 5 V supply line for short circuit to ground	♦ Switch off ignition. ♦ Pull off mirror plug on control module. ♦ Measure resistance between plug on carrier pin 3 and ground. ♦ Measure resistance between plug on carrier pin 3 and pin 7.	∞ Ω ⇒ Step 5	Repair wiring harness. → End

Work instruction			Display OK	If not OK
5	Check 5 V supply line for short circuit to B+	♦ Switch on ignition. ♦ Measure voltage on 'carrier with gear unit' between pin 5 and ground.	0 V ⇒ Step 6	Repair wiring harness. → End
6	Check 5 V supply line for open circuit	♦ Switch off ignition. ♦ Measure resistance between pin 5 of mirror plug on control module and pin 5 of 'carrier with gear unit'.	< 5 Ω ⇒ Step 12	Repair wiring harness. → End
7	Check ground lead for open circuit	♦ Switch off ignition. ♦ Pull off mirror plug on control module. ♦ Measure resistance between pin 4 of mirror plug and pin 7 of plug on 'carrier with gear unit'.	< 5 Ω ⇒ Step 12	Repair wiring harness. → End
8	Check signal lead for short circuit to ground	♦ Switch off ignition. ♦ Pull plug off the control module. ♦ Measure resistance between plug on 'carrier with gear unit' pin 5 and ground. ♦ Measure resistance between pins 5 and 7 of plug on 'carrier with gear unit'.	∞ Ω ⇒ Step 9	Repair wiring harness. → End
9	Check signal lead for short circuit to B+	♦ Switch on ignition. ♦ Measure voltage between plug on 'carrier with gear unit' pin 5 and ground.	0 V ⇒ Step 10	Repair wiring harness. → End
10	Check signal lead for open circuit	♦ Switch off ignition. ♦ Measure resistance between pin 5 of plug on carrier with gear unit and pin 6 of mirror plug on control module.	< 5 Ω ⇒ Step 12	Repair wiring harness. → End
11	♦ Replace 'carrier with gear unit'		→ End	
12	♦ Replace control module		→ End	

Fault code 22

Pot. mirror right vertical - open circuit

Diagnostic conditions

- Ignition on
- Switch for memory seat adjustment actuated

Possible cause of fault

- Open circuit in supply lead to pot. for right rearview mirror, vertical
- Potentiometer faulty
- Control module faulty

Affected terminals

Plug 7, terminals 4, 5 and 7

Diagnosis/troubleshooting

Work instruction			Display OK	If not OK
1	Check 5V supply voltage of the "carrier with gear unit"	♦ Switch off ignition ♦ Pull off plug on "carrier with gear unit" ♦ Switch on ignition ♦ Measure voltage between pin 3 and ground	approx. 5V ⇒ Step 2	⇒ Step 4
2	Check ground lead of the "carrier with gear unit"	♦ Measure voltage on plug of the "carrier with gear unit", between pins 3 and 7	approx. 5V ⇒ Step 3	⇒ Step 7
3	Check signal lead of the "carrier with gear unit"	♦ Select "Voltage of right vertical mirror potentiometer" in menu item "Actual values" ♦ Connect jumper between pins 1 and 5	0V without jumper Approx. 5 V with jumper ⇒ Step 11	⇒ Step 8

Work instruction			Display OK	If not OK
4	Check 5V supply lead for short to ground	♦ Switch off ignition ♦ Pull off "mirror plug" on control module ♦ Measure the resistance between plug on carrier pin 3 and ground ♦ Measure the resistance between plug on carrier pin 3 and pin 7	∞ Ω ⇒ Step 5	Repair wiring harness → End
5	Check 5V supply lead for short to B+	♦ Switch on ignition ♦ Measure voltage on "carrier with gear unit", between pin 5 and ground	0 V ⇒ Step 6	Repair wiring harness → End
6	Check 5V supply lead for open circuit	♦ Switch off ignition ♦ Measure resistance between mirror plug on control module pin 5 and "carrier with gear unit" pin 5	< 5 Ω ⇒ Step 12	Repair wiring harness → End
7	Check ground lead for open circuit	♦ Switch off ignition ♦ Pull off mirror plug on control module ♦ Measure resistance between mirror plug pin 4 and plug on "carrier with gear unit" pin 7	< 5 Ω ⇒ Step 12	Repair wiring harness → End
8	Check signal lead for short to ground	♦ Switch off ignition ♦ Pull plug off the control module ♦ Measure resistance between plug on "carrier with gear unit" pin 1 and ground ♦ Measure resistance between plug on "carrier with gear unit" pin 1 and Pin 7	∞ Ω ⇒ Step 9	Repair wiring harness → End
9	Check signal lead for short to B+	♦ Switch on ignition ♦ Measure voltage between plug on "carrier with gear unit" pin 1 and ground	0 V ⇒ Step 10	Repair wiring harness → End
10	Check signal lead for open circuit	♦ Switch off ignition ♦ Measure resistance between plug on "carrier with gear unit" pin 1 and mirror plug on control module pin 7	< 5 Ω ⇒ Step 12	Repair wiring harness → End
11	♦ Replace "carrier with gear unit"		→ End	
12	♦ Replace control module		→ End	

Fault code 23

Pot. mirror right vertical - short circuit

Diagnostic conditions

- Ignition on
- Switch for memory seat adjustment actuated

Possible cause of fault

- Short circuit in supply lead to pot. for right rearview mirror, vertical
- Potentiometer faulty
- Control module faulty

Affected terminals

Plug 7, terminals 4, 5 and 7

Diagnosis/troubleshooting

Work instruction			Display OK	If not OK
1	Check 5V supply voltage of the "carrier with gear unit"	♦ Switch off ignition ♦ Pull off plug on "carrier with gear unit" ♦ Switch on ignition ♦ Measure voltage between pin 3 and ground	approx. 5V ⇒ Step 2	⇒ Step 4
2	Check ground lead of the "carrier with gear unit"	♦ Measure voltage on plug of the "carrier with gear unit", between pins 3 and 7	approx. 5V ⇒ Step 3	⇒ Step 7
3	Check signal lead of the "carrier with gear unit"	♦ Select "Voltage of right vertical mirror potentiometer" in menu item "Actual values" ♦ Connect jumper between pins 3 and 5	0V without jumper Approx. 5 V with jumper ⇒ Step 11	⇒ Step 8

Work instruction			Display OK	If not OK
4	Check 5V supply lead for short to ground	♦ Switch off ignition ♦ Pull off mirror plug on control module ♦ Measure the resistance between plug on carrier pin 3 and ground ♦ Measure the resistance between plug on carrier pin 3 and pin 7	∞ Ω ⇒ Step 5	Repair wiring harness → End
5	Check 5V supply lead for short to B+	♦ Switch on ignition ♦ Measure voltage on "carrier with gear unit", between pin 5 and ground	0 V ⇒ Step 6	Repair wiring harness → End
6	Check 5V supply lead for open circuit	♦ Switch off ignition ♦ Measure resistance between mirror plug on control module pin 5 and "carrier with gear unit" pin 5	< 5 Ω ⇒ Step 12	Repair wiring harness → End
7	Check ground lead for open circuit	♦ Switch off ignition ♦ Pull off mirror plug on control module ♦ Measure resistance between mirror plug pin 4 and plug on "carrier with gear unit" pin 7	< 5 Ω ⇒ Step 12	Repair wiring harness → End
8	Check signal lead for short to ground	♦ Switch off ignition ♦ Pull plug off the control module ♦ Measure resistance between plug on "carrier with gear unit" pin 1 and ground ♦ Measure resistance between plug on "carrier with gear unit" pin 1 and Pin 7	∞ Ω ⇒ Step 9	Repair wiring harness → End
9	Check signal lead for short to B+	♦ Switch on ignition ♦ Measure voltage between plug on "carrier with gear unit" pin 1 and ground	0 V ⇒ Step 10	Repair wiring harness → End
10	Check signal lead for open circuit	♦ Switch off ignition ♦ Measure resistance between plug on carrier with gear unit pin 1 and mirror plug on control module pin 7	< 5 Ω ⇒ Step 12	Repair wiring harness → End
11	♦ Replace "carrier with gear unit"		→ End	
12	♦ Replace control module		→ End	

Fault code 24

Pot. mirror left vertical - open circuit

Diagnostic conditions

- Ignition on
- Switch for memory seat adjustment actuated

Possible cause of fault

- Open circuit in supply lead to pot. for left rearview mirror
- Potentiometer faulty
- Control module faulty

Affected terminals

Plug 7, terminals 4, 5 and 11

Diagnosis/troubleshooting

Work instruction			Display OK	If not OK
1	Check 5V supply voltage of the "carrier with gear unit"	♦ Switch off ignition ♦ Pull off plug on "carrier with gear unit" ♦ Switch on ignition ♦ Measure voltage between pin 3 and ground	approx. 5V ⇒ Step 2	⇒ Step 4
2	Check ground lead of the "carrier with gear unit"	♦ Measure voltage on plug of the "carrier with gear unit", between pins 3 and 7	approx. 5V ⇒ Step 3	⇒ Step 7
3	Check signal lead of the "carrier with gear unit"	♦ Select "Voltage of left mirror potentiometer" in menu item "Actual values" ♦ Connect jumper between pins 3 and 5	0V without jumper Approx. 5 V with jumper ⇒ Step 11	⇒ Step 8
4	Check 5V supply lead for short to ground	♦ Switch off ignition ♦ Pull off mirror plug on control module ♦ Measure the resistance between plug on carrier pin 3 and ground ♦ Measure the resistance between plug on carrier pin 3 and pin 7	∞ Ω ⇒ Step 5	Repair wiring harness → End

Work instruction			Display OK	If not OK
5	Check 5V supply lead for short to B+	♦ Switch on ignition ♦ Measure voltage on "carrier with gear unit", between pin 5 and ground	0 V ⇒ Step 6	Repair wiring harness → End
6	Check 5V supply lead for open circuit	♦ Switch off ignition ♦ Measure resistance between mirror plug on control module pin 5 and "carrier with gear unit" pin 5	< 5 Ω ⇒ Step 12	Repair wiring harness → End
7	Check ground lead for open circuit	♦ Switch off ignition ♦ Pull off mirror plug on control module ♦ Measure resistance between mirror plug pin 4 and plug on "carrier with gear unit" pin 7	< 5 Ω ⇒ Step 12	Repair wiring harness → End
8	Check signal lead for short to ground	♦ Switch off ignition ♦ Pull plug off the control module ♦ Measure resistance between plug on "carrier with gear unit" pin 1 and ground ♦ Measure resistance between plug on "carrier with gear unit" pin 1 and Pin 10	∞ Ω ⇒ Step 9	Repair wiring harness → End
9	Check signal lead for short to B+	♦ Switch on ignition ♦ Measure voltage between plug on "carrier with gear unit" pin 1 and ground	0 V ⇒ Step 10	Repair wiring harness → End
10	Check signal lead for open circuit	♦ Switch off ignition ♦ Measure resistance between plug on carrier with gear unit pin 1 and mirror plug on control module pin 10	< 5 Ω ⇒ Step 12	Repair wiring harness → End
11	♦ Replace "carrier with gear unit"		→ End	
12	♦ Replace control module		→ End	

Fault code 25

Pot. mirror left horizontal - short circuit

Diagnostic conditions

- Ignition on
- Switch for memory seat adjustment actuated

Possible cause of fault

- Open circuit in supply lead to pot. for left rearview mirror
- Potentiometer faulty
- Control module faulty

Affected terminals

Plug 7, terminals 4, 5 and 10

Diagnosis/troubleshooting

Work instruction			Display OK	If not OK
1	Check 5 V supply voltage of 'carrier with gear unit'	♦ Pull off plug on 'carrier with gear unit'. ♦ Switch on ignition. ♦ Measure voltage between pin 3 and ground.	Approx. 5 V ⇒ Step 2	⇒ Step 4
2	Check ground lead of 'carrier with gear unit'	♦ Measure voltage between pins 3 and 7 on plug of 'carrier with gear unit'.	Approx. 5 V ⇒ Step 3	⇒ Step 7
3	Check signal lead of 'carrier with gear unit'	♦ Select 'Voltage of left horizontal mirror potentiometer' in the Actual values menu item. ♦ Connect jumper between pins 3 and 1.	Approx. 5 V ⇒ Step 11	⇒ Step 8
4	Check 5 V supply lead for short circuit to ground	♦ Switch off ignition. ♦ Pull off mirror plug on control module. ♦ Measure resistance between plug on carrier pin 3 and ground. ♦ Measure resistance between plug on carrier pin 3 and pin 7.	∞ Ω ⇒ Step 5	Repair wiring harness. → End

Work instruction			Display OK	If not OK
5	Check 5 V supply lead for short to B+	♦ Switch on ignition. ♦ Measure voltage on 'carrier with gear unit' between pin 5 and ground.	0 V ⇒ Step 6	Repair wiring harness. → End
6	Check 5 V supply lead for open circuit	♦ Switch off ignition. ♦ Measure resistance between pin 5 of mirror plug on control module and pin 5 of 'carrier with gear unit'.	< 5 Ω ⇒ Step 12	Repair wiring harness. → End
7	Check ground lead for open circuit	♦ Switch off ignition. ♦ Pull off mirror plug on control module. ♦ Measure resistance between pin 4 of mirror plug and pin 7 of plug on 'carrier with gear unit'.	< 5 Ω ⇒ Step 12	Repair wiring harness. → End
8	Check signal lead for short circuit to ground	♦ Switch off ignition. ♦ Pull plug off the control module. ♦ Measure resistance between plug on 'carrier with gear unit' pin 1 and ground. ♦ Measure resistance between pins 1 and 7 of plug on 'carrier with gear unit'.	∞ Ω ⇒ Step 9	Repair wiring harness. → End
9	Check signal lead for short circuit to B+	♦ Switch on ignition. ♦ Measure voltage between plug on 'carrier with gear unit' pin 1 and ground.	0 V ⇒ Step 10	Repair wiring harness. → End
10	Check signal lead for open circuit	♦ Switch off ignition. ♦ Measure resistance between pin 1 of plug on carrier with gear unit and pin 10 of mirror plug on control module. ♦ Measure resistance between pin 5 of plug on 'carrier with gear unit' and pin 10 of mirror plug on control module.	< 5 Ω ⇒ Step 12	Repair wiring harness. → End
11	♦ Replace 'carrier with gear unit'		→ End	
12	♦ Replace control module		→ End	

Fault code 26

Pot. mirror left vertical - open circuit

Diagnostic conditions

- Ignition on
- Switch for memory seat adjustment actuated

Possible cause of fault

- Open circuit in supply lead to pot. for left rearview mirror
- Potentiometer faulty
- Control module faulty

Affected terminals

Plug 7, terminals 4, 5 and 11

Diagnosis/troubleshooting

Work instruction			Display OK	If not OK
1	Check 5V supply voltage of the "carrier with gear unit"	♦ Switch off ignition ♦ Pull off plug on "carrier with gear unit" ♦ Switch on ignition ♦ Measure voltage between pin 3 and ground	approx. 5V ⇒ Step 2	⇒ Step 4
2	Check ground lead of the "carrier with gear unit"	♦ Measure voltage on plug of the "carrier with gear unit", between pins 3 and 7	approx. 5V ⇒ Step 3	⇒ Step 7
3	Check signal lead of the "carrier with gear unit"	♦ Select "Voltage of left vertical mirror potentiometer" in menu item "Actual values" ♦ Connect jumper between pins 3 and 5	0V without jumper Approx. 5 V with jumper ⇒ Step 11	⇒ Step 8
4	Check 5V supply lead for short to ground	♦ Switch off ignition ♦ Pull off mirror plug on control module ♦ Measure the resistance between plug on carrier pin 3 and ground ♦ Measure the resistance between plug on carrier pin 3 and pin 7	∞ Ω ⇒ Step 5	Repair wiring harness → End

Work instruction			Display OK	If not OK
5	Check 5V supply lead for short to B+	♦ Switch on ignition ♦ Measure voltage on "carrier with gear unit", between pin 5 and ground	0 V ⇒ Step 6	Repair wiring harness → End
6	Check 5V supply lead for open circuit	♦ Switch off ignition ♦ Measure resistance between mirror plug on control module pin 5 and "carrier with gear unit" pin 5	< 5 Ω ⇒ Step 12	Repair wiring harness → End
7	Check ground lead for open circuit	♦ Switch off ignition ♦ Pull off mirror plug on control module ♦ Measure resistance between mirror plug pin 4 and plug on "carrier with gear unit" pin 7	< 5 Ω ⇒ Step 12	Repair wiring harness → End
8	Check signal lead for short to ground	♦ Switch off ignition ♦ Pull off mirror plug on control module ♦ Measure resistance between plug on "carrier with gear unit" pin 5 and ground ♦ Measure resistance between plug on "carrier with gear unit" pin 5 and Pin 7	∞ Ω ⇒ Step 9	Repair wiring harness → End
9	Check signal lead for short to B+	♦ Switch on ignition ♦ Measure voltage between plug on "carrier with gear unit" pin 5 and ground	0 V ⇒ Step 10	Repair wiring harness → End
10	Check signal lead for open circuit	♦ Switch off ignition ♦ Measure resistance between plug on "carrier with gear unit" pin 5 and mirror plug on control module pin 11	< 5 Ω ⇒ Step 12	Repair wiring harness → End
11	♦ Replace "carrier with gear unit"		→ End	
12	♦ Replace control module		→ End	

Fault code 27

Pot. mirror left vertical - short circuit

Diagnostic conditions

- Ignition on
- Switch for memory seat adjustment actuated

Possible cause of fault

- Short circuit in supply lead to pot. for left rearview mirror
- Potentiometer faulty
- Control module faulty

Affected terminals

Plug 7, terminals 4, 5 and 11

Diagnosis/troubleshooting

Work instruction			Display OK	If not OK
1	Check 5V supply voltage of the "carrier with gear unit"	♦ Switch off ignition ♦ Pull off plug on "carrier with gear unit" ♦ Switch on ignition ♦ Measure voltage between pin 3 and ground	approx. 5V ⇒ Step 2	⇒ Step 4
2	Check ground lead of the "carrier with gear unit"	♦ Measure voltage on plug of the "carrier with gear unit", between pins 3 and 7	approx. 5V ⇒ Step 3	⇒ Step 7
3	Check signal lead of the "carrier with gear unit"	♦ Select "Voltage of left vertical mirror potentiometer" in menu item "Actual values" ♦ Connect jumper between pins 3 and 5	0V without jumper Approx. 5 V with jumper ⇒ Step 11	⇒ Step 8
4	Check 5V supply lead for short to ground	♦ Switch off ignition ♦ Pull off mirror plug on control module ♦ Measure the resistance between plug on carrier pin 3 and ground ♦ Measure the resistance between plug on carrier pin 3 and pin 7	∞ Ω ⇒ Step 5	Repair wiring harness → End

Work instruction			Display OK	If not OK
5	Check 5V supply lead for short to B+	♦ Switch on ignition ♦ Measure voltage on "carrier with gear unit", between pin 5 and ground	0 V ⇒ Step 6	Repair wiring harness → End
6	Check 5V supply lead for open circuit	♦ Switch off ignition ♦ Measure resistance between mirror plug on control module pin 5 and "carrier with gear unit" pin 5	< 5 Ω ⇒ Step 12	Repair wiring harness → End
7	Check ground lead for open circuit	♦ Switch off ignition ♦ Pull off mirror plug on control module ♦ Measure resistance between mirror plug pin 4 and plug on "carrier with gear unit" pin 7	< 5 Ω ⇒ Step 12	Repair wiring harness → End
8	Check signal lead for short to ground	♦ Switch off ignition ♦ Pull off mirror plug on control module ♦ Measure resistance between plug on "carrier with gear unit" pin 5 and ground ♦ Measure resistance between plug on "carrier with gear unit" pin 5 and Pin 7	∞ Ω ⇒ Step 9	Repair wiring harness → End
9	Check signal lead for short to B+	♦ Switch on ignition ♦ Measure voltage between plug on "carrier with gear unit" pin 5 and ground	0 V ⇒ Step 10	Repair wiring harness → End
10	Check signal lead for open circuit	♦ Switch off ignition ♦ Measure resistance between plug on carrier with gear unit pin 5 and mirror plug on control module pin 11	< 5 Ω ⇒ Step 12	Repair wiring harness → End
11	♦ Replace "carrier with gear unit"		→ End	
12	♦ Replace control module		→ End	

Fault code 32

Button M, 1, 2, 3 or operating buttons actuated for longer than 60 s

Diagnostic conditions

- Ignition on
- 60 s waiting time

Possible cause of fault

- Switch for memory seat adjustment (1, 2 or 3) continuously actuated
- Switch for seat adjustment (e.g. fore-and-aft adjustment forward) continuously actuated

Affected terminals

Plug 5 "keypad"

Diagnosis/troubleshooting

Work instruction			Display OK	If not OK
1	Check button positions	♦ Check menu item "Input signals" ♦ Select a maximum of 8 button positions ♦ Search for the button on the screen that is continuously actuated	All button positions are indicated as not actuated ⇒ Step 2	At least one of the button positions is continuously actuated ⇒ Step 3
2	Check button positions	♦ Repeat the procedure from point 1 for further button positions ♦ Search for the button on the screen that is continuously actuated	All button positions are indicated as not actuated → End	At least one of the button positions is continuously actuated. ⇒ Step 3
3	♦ Replace switch for memory seat adjustment or switch for seat adjustment		→ End	

Air conditioning H01, H02

Introduction

The manual contains the diagnosis for the following system:

Air-conditioning H01 and H 02

General instructions / safety instructions

The following points must be observed during vehicle diagnosis:

- After the battery is connected, volatile memories must be reprogrammed. In the case of radio coding and tuning, the customer must be informed of decoding and the deleted tuner memory.
- After troubleshooting or repairs, erase the fault memory with the Porsche System Tester 2 and carry out a test drive.
- After the test drive, read out the fault memory with Porsche System Tester 2 again.

Danger!

Danger of injury through triggering of driver's airbag

- ***Never hang PST 2 over the steering wheel.***

Caution!

Danger of damage due to improper handling of the battery and the control module connectors!

- ***Never disconnect battery with engine running.***
- ***Never start engine without securely connected battery.***
- ***Never pull off or push on plug connections of the control modules or other electronic components when the ignition is switched on.***

General information on the fault memory

Fault code setting conditions

Fault codes can be set in several circumstances, e.g.:

- battery disconnected
- plug connections disconnected

- power failure
- etc.

In these circumstances, no fault is present in the system and the fault memory must be erased.

Fault memory Info key F8

In order to be able to assess the fault exactly, the fault memory Info key F8 must be pressed. This information should be saved using the Save key F4 and printed out. If a fault code is stored with "not present" status and no other problems are present, then the fault memory must be erased.

After completing repair work, read out fault memory, press Info key, switch off ignition and switch on again. After a short period, the fault memory text goes from "present" to "not present", if the fault has actually been remedied.

Open circuit - short to ground / voltage short / version; vehicle parameters / counter	
Open circuit or short to ground:	There is (present) or was (not present) a short circuit to ground or an open circuit in the circuit to the control module terminal.
Voltage short:	There is (present) or was (not present) a short circuit to voltage.

Tools

The following testers are required for vehicle diagnosis:

Porsche System Tester 2 (PST 2)

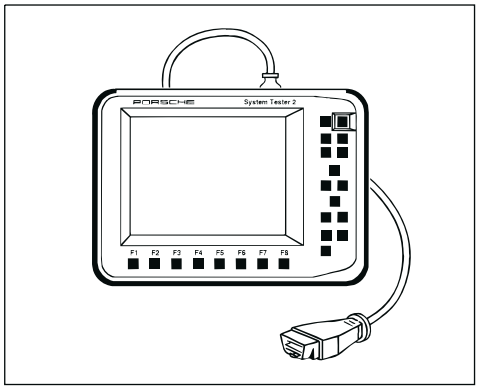

Commercially available digital multimeter

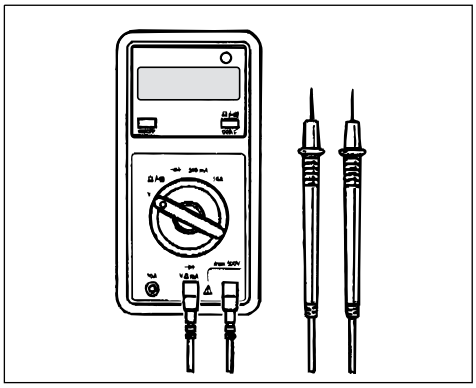

Component arrangement

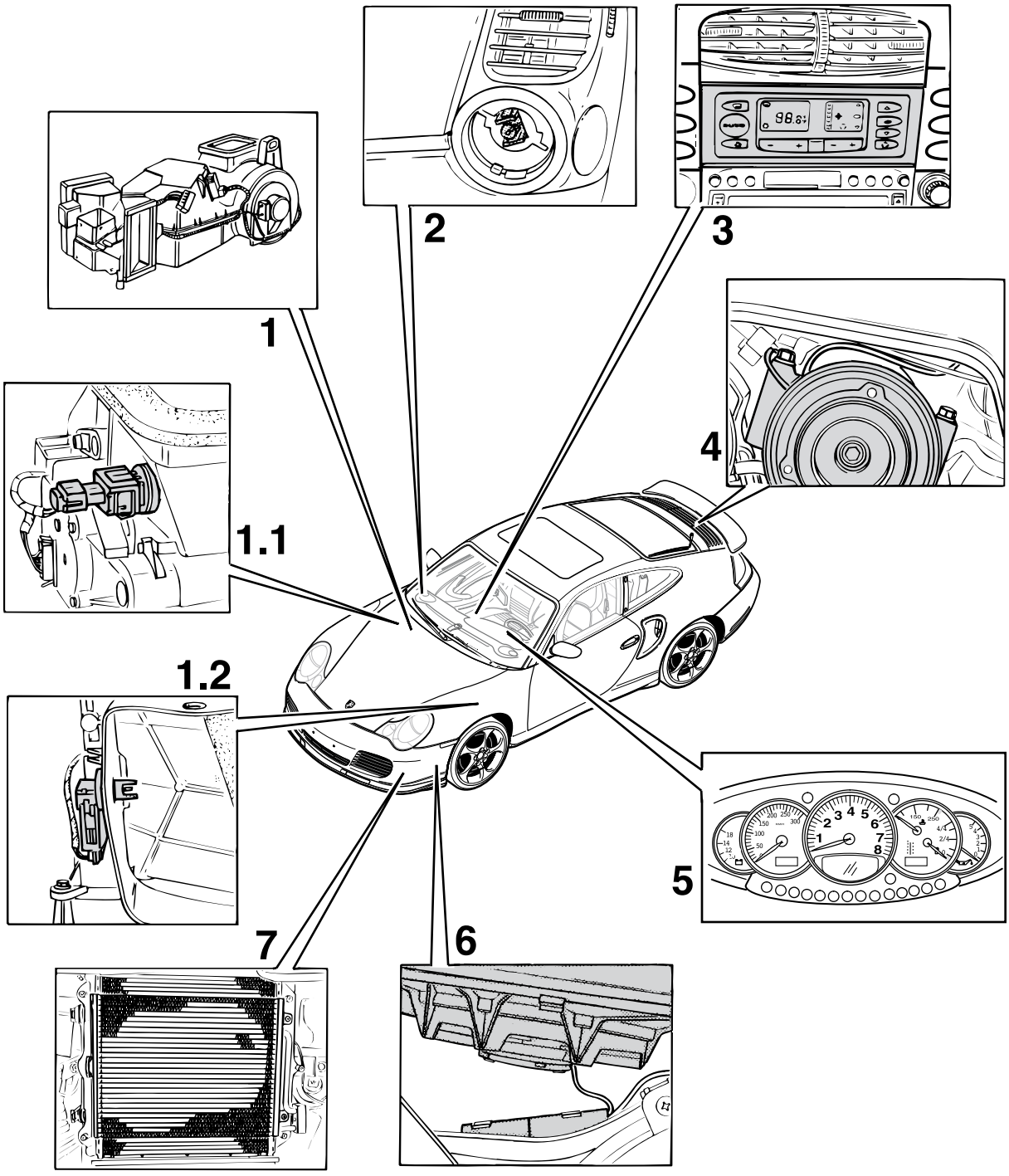

1 - Heating/air-conditioning unit

- ❑ 1.1 Outside sensor
- ❑ 1.2 Blower outlet sensor

2 - Interior sensor

3 - Air-conditioning system regulator

4 - Air-conditioning compressor

5 - Instrument cluster

6 - Electric sensor with ballast resistor

7 - Condenser

Connector assignment

Connector assignment for air-conditioning control module

The two plugs, A and C, are replaced by networking (used by CAN-Comfort Bus). The signals required for function or control are exchanged via the CAN Bus lines CAN Comfort high and CAN Comfort low.

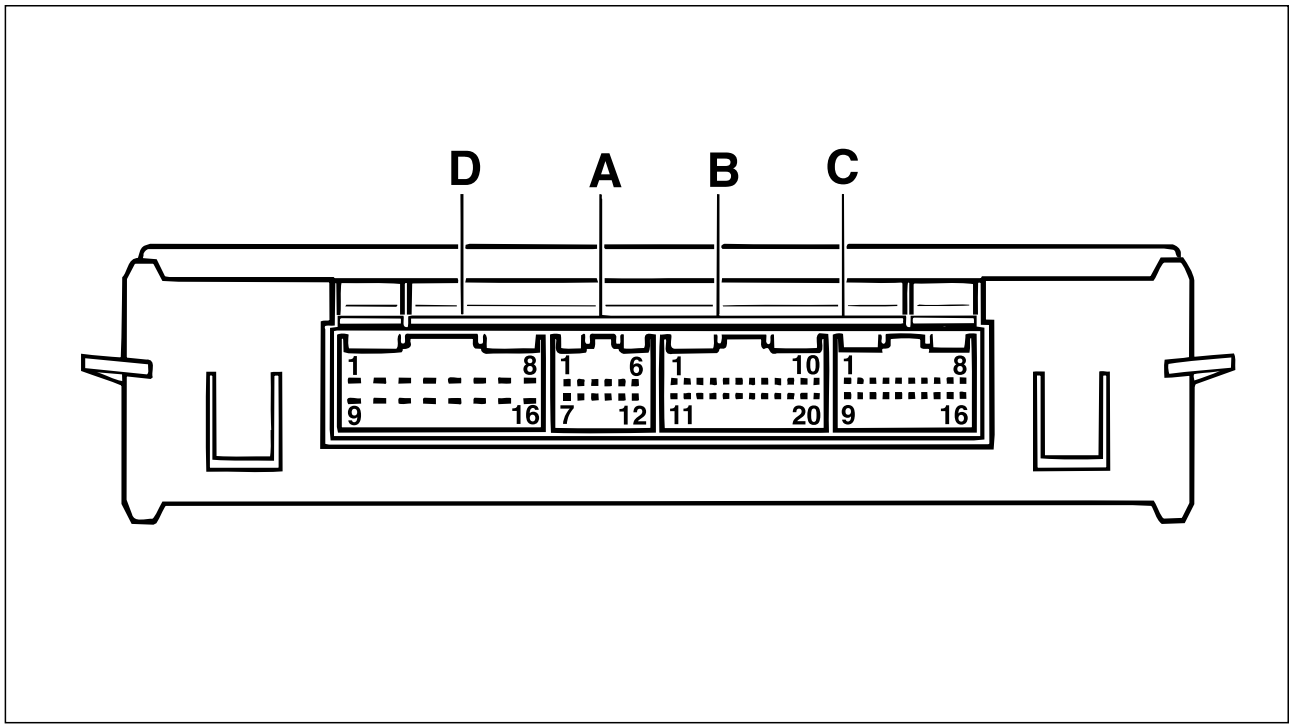

Connector B (red)

Pin	Designation	Pin	Designation
1	CAN Comfort high	11	Cooler checkback signal +
2	CAN Comfort low	12	Cooler activation
3	Footwell/defrost flap checkback signal	13	Temperature mixing valve checkback signal
4	Not used	14	Central flap checkback signal
5	Outside temperature sensor (air intake)	15	Not used
6	Interior temperature sensor	16	Compresser voltage
7	Temperature sensor (blower outlet sensor,footwell)	17	Outside air / recirculation valve checkback signal
8	Not used	18	Not used
9	Ground sensor	19	Information system
10	Temperature mixing valve motor	20	+5 V

Connector D (black)

Pin	Designation	Pin	Designation
1	Not used	9	Terminal 15
2	Temperature mixing valve motor	10	Temperature mixing valve motor
3	Footwell / defrost flap motor	11	Footwell defrost flap motor
4	Motor, central valve	12	Central valve motor
5	Outside air / recirculation valve motor	13	Outside air / recirculation valve motor
6	Not used	14	Not used
7	Terminal 30	15	Terminal 31
8	Not used	16	Not used

As of model year 2002

Control module function

Replacing the air-conditioning system regulator and flashing display

Note!

If the air-conditioning system regulator is replaced, the display flashes after the ignition is turned on. In this case, the system test must be carried out first. The air-conditioning system regulator hereby learns the upper limit stops of the drive motor and the entire system is checked simultaneously!

System test

Special diagnosis routines can be run with this menu item.

1. Using the Porsche System Tester II No. 9588 select menu item'System test'.

The following conditions must be observed for the system test:

- Vehicle speed < 10 $^{km}/_{h}$
- Engine start detected and 10 seconds elapsed since engine start
- Terminal 15 supply voltage OK
- Sensor power supply (5 V) OK
- Engine temperature < 110 °C
- Outside temperature > 3 °C
- No fault stored
- Engine idling

2. When the conditions mentioned above have been met, continue with [>>] button.

The following tests are performed:

- Display of all segments in the control module.
- The drive motors are traversed across the entire range once.
- The measured positioning travel is subjected to a plausibility test.
- Two different voltage values are set on the fresh-air blower and tested.

- The A/C circuit is tested via the DME.
- All fault paths are tested, and any faults are stored.

3. After the System test is finished, the followng text appears 'System test completed successfully. Display fault memory with the [>>] button.'.
4. Then press the [>>] key, and if necessary remedy the displayed fault.

After the system test, the air conditioning system regulator reverts to the state it was in before the test was carried out.

Modify coding

This menu item is used to retrieve and change the coding of the following functions:

Coding	Setting	Function
Japan coding Recirculating function	Active/ not active	In the coding for Japan, air recirculation is switched on constantly even when external temperatures are < 3°C (also no automatic resetting after ignition off 20 minutes)
Pollen filter	Present/not present	
AC symbol	Active / not active	The AC symbol can be hidden in the display.
PCM	Installed /not installed	Vehicles without PCM or with PCM2 must be coded as 'not installed'!

Procedure:

1. Select the menu item 'Modify coding' using the Porsche System Tester II No. 9588. (The table listed above appears.)
2. The display can be saved using the [F4] key.
3. Using the buttons [↑] and [↓] select the coding to be modified and continue using the [>>] button.
4. Using the buttons [↑] and [↓] select the correct coding and confirm using the 'Coding' ([F8]) button.
5. The upper right display changes to the new coding.
6. For coding overview, return using the button [<<].
7. Select another coding (see Step 3) or end the procedure using the button [<<].

Fault overview

Fault code	Fault text	Fault effect
21	Ouside temperature sensor Open circuit/short to ground	Substitute value
22	Interior temperature sensor Open circuit/short to ground	Substitute value
23	Footwell blower outlet sensor Open circuit/ short to ground	Substitute value
24	Supply voltage terminal 15 Voltage too high/ too low	Function failure
25	Supply voltage (5 V) Voltage too high/ too low	Entry of all flaps in fault memory, system error, no control
26	Temperature mixing valve motor Signal unclear	Flap adjustment not possible
27	Central flap motor Signal unclear	Flap adjustment not possible
28	Footwell defrost flap motor Signal unclear	Flap adjustment not possible
29	Outside air/recirculation air motor Signal unclear	Flap adjustment not possible
30	AC signal unclear	Air-conditioning failure
31	Fresh-air blower motor voltage too low/ too high	Disturbance of function
32	Control unit control unit faulty	No control
34	Air-conditioning CAN BUS off	-
35	Interface for instrument cluster (see Instrument cluster FS)	Substitute values
36	CAN-timeout instrument cluster	Substitute values
37	CAN signal PCM	Substitute values
38	CAN-timeout PCM	Substitute values

Fault code 21

Outside temperature sensor - short to B+/ short to ground

Diagnostic conditions

- Ignition on

Note!

- *No control module fault stored*
- *No fault with supply voltage (5 V)*

Possible cause of fault

- Short circuit to voltage/ground or open circuit in the wiring between the air-conditioning system regulator and the outside temperature sensor
- Temperature sensor faulty

Affected terminals

Plug B, terminals 5 and 9

Diagnosis/troubleshooting

Work instruction			Display OK	If not OK
1	Check temperature sensor	• Switch off ignition • Pull plug B off the air-conditioning system regulator • Measure resistance on plug B between pin 5 and pin 9	approx. 1.2 kΩ (at 23 °C) ⇒ Step 2	⇒ Step 5
2	Check wiring between air-conditioning system regulator and temperature sensor for short to B+	• Remove connector of temperature sensor • Switch on ignition • Measure voltage at plug B of the air-conditioning system regulator between pin 5 and ground • Measure voltage at plug B of the air-conditioning system regulator between pin 9 and ground	0 V ⇒ Step 3	Repair wiring harness → End
3	Check wiring between air-conditioning system regulator and temperature sensor for short to ground	• Measure resistance at plug B of the air-conditioning system regulator between pin 5 and ground	∞ Ω ⇒ Step 4	Repair wiring harness → End

Work instruction			Display OK	If not OK
4	Check wiring between air-conditioning system regulator and temperature sensor for interruption	♦ Measure resistance between plug B on the air-conditioning system regulator pin 5 and plug on outside temperature sensor pin 1 ♦ Measure resistance between plug B on the air-conditioning system regulator pin 9 and plug on outside temperature sensor pin 2	< 5Ω ⇒ Step 6	Repair wiring harness → End
5	♦ Replace temperature sensor		→ End	
6	♦ Replace air-conditioning system regulator		→ End	

Fault code 22

Interior temperature sensor - short to B+/ short to ground

Diagnostic conditions

- Ignition on

Note!

- *No control module fault stored*
- *No fault with supply voltage (5 V)*

Possible cause of fault

- Short circuit to voltage/ground or open circuit in the wiring between the air-conditioning system regulator and the temperature sensor
- Interior temperature sensor faulty

Affected terminals

Plug B, terminals 6 and 9

Diagnosis/troubleshooting

Work instruction			Display OK	If not OK
1	Check temperature sensor	• Switch off ignition • Remove plug B from the climate control • Measure resistance at plug B between pin 6 and pin 9	approx. 3 kΩ (at 23 °C) ⇒ Step 2	⇒ Step 5
2	Check wiring between climate control and temperature sensor for short to B+	• Remove connector from temperature sensor • Switch on ignition • Measure voltage at plug B of the climate control between pin 6 and ground • Measure voltage at plug B of the air-conditioning system regulator between pin 9 and ground	0 V ⇒ Step 3	Repair wiring harness → End
3	Check wiring between air-conditioning system regulator and temperature sensor for short to ground	• Measure resistance at plug B of the air-conditioning system regulator between pin 6 and ground	∞ Ω ⇒ Step 6	Repair wiring harness → End

Work instruction			Display OK	If not OK
4	Check wiring between air-conditioning system regulator and temperature sensor for interruption	♦ Measure resistance between plug B on the air-conditioning system regulator pin 9 and plug on interior temperature sensor pin 4 ♦ Measure resistance between plug B on the air-conditioning system regulator pin 6 and plug on interior temperature sensor pin 5	< 5Ω ⇒ Step 6	Repair wiring harness → End
5	♦ Replace interior temperature sensor		→ End	
6	♦ Replace air-conditioning system regulator		→ End	

Fault code 23

Footwell blower outlet sensor - Interruption/ ground short

Diagnostic conditions

- Ignition on

Note!

- *No control module fault stored*
- *No fault with supply voltage (5 V)*

Possible cause of fault

- Short circuit to voltage/ground or open circuit in the wiring between the air-conditioning system regulator and the temperature sensor
- Temperature sensor faulty

Affected terminals

Plug B, terminals 7 and 9

Diagnosis/troubleshooting

Work instruction			Display OK	If not OK
1	Check temperature sensor	• Switch off ignition • Remove plug B from the air-conditioning system regulator • Measure resistance at plug B between pin 7 and pin 9	approx. 2.8 kΩ (at 23 °C) ⇒ Step 2	⇒ Step 5
2	Check wiring between air-conditioning system regulator and temperature sensor for short to B+	• Remove connector from temperature sensor • Switch on ignition • Measure voltage at plug B of the air-conditioning system regulator between pin 7 and ground • Measure voltage at plug B of the air-conditioning system regulator between pin 9 and ground	0 V ⇒ Step 3	Repair wiring harness → End
3	Check wiring between air-conditioning system regulator and temperature sensor for short to ground	• Measure resistance at plug B of the air-conditioning system regulator between pin 7 and ground	∞ Ω ⇒ Step 4	Repair wiring harness → End

Work instruction			Display OK	If not OK
4	Check wiring between air-conditioning system regulator and temperature sensor for interruption	♦ Measure resistance between plug B on the air-conditioning system regulator pin 7 and plug on temperature sensor pin 1 ♦ Measure resistance between plug B on the air-conditioning system regulator pin 9 and plug on temperature sensor pin 2	< 5Ω ⇒ Step 6	Repair wiring harness → End
5	♦ Replace temperature sensor		→ End	
6	♦ Replace air-conditioning system regulator		→ End	

Fault code 24

Supply voltage (terminal 15) - voltage too high/ too low

Diagnostic conditions

- Ignition on

Note!

No control module fault stored

Possible cause of fault

- Low battery positive voltage
- Generator faulty

Affected terminals

Plug D, terminals 9 and 15

Diagnosis/troubleshooting

Work instruction			Display OK	If not OK
1	Check battery.		⇒ Step 2	Charge or replace battery → End
2	Check the generator.	♦ Check generator voltage approx. 13 to 14 V when engine is running.	⇒ Step 3	Replace generator → End
3	Check contact resistance of wire connections.	♦ Switch off ignition ♦ Remove plug D from the air-conditioning system regulator ♦ Switch on ignition ♦ Measure voltage between plug D, air-conditioning system regulator pin 9 and ground ♦ Measure voltage between plug D, air-conditioning system regulator pin 7 and ground ♦ Measure voltage between plug D, air-conditioning system regulator pin 9 and pin 15	Battery voltage → End	Check wiring harness for fuse E7. Check wiring harness for ground point 4. → End

Fault code 25

Supply voltage (5 V) - too high/ too low

Diagnostic conditions

- Ignition on

Note!

No control module fault stored

Possible cause of fault

- Short circuit to voltage/ground or open circuit in the wiring between the air-conditioning system regulator and the four flap motors.
- Air-conditioning system regulator faulty

Affected terminals

Plug B, terminals 9 and 20

Diagnosis/troubleshooting

Work instruction			Display OK	If not OK
1	Check 5 V supply lead for short to B+	♦ Switch off ignition ♦ Remove plug B from the air-conditioning system regulator ♦ Switch on ignition ♦ Measure voltage at plug B of the air-conditioning system regulator between pin 20 and ground	0 V ⇒ Step 2	Repair wiring harness→ End
2	Check 5 V - supply line	♦ Switch off ignition ♦ Replace plug B on the air-conditioning system regulator ♦ Remove connector for temperature mixing valve ♦ Switch on ignition ♦ Measure voltage at plug of the flap motor between pin 3 and ground	approx. 5 V ⇒ Step 4	If more than 5.5 V is indicated: ⇒ Step 8 If 0 V is indicated: ⇒ Step 3

Work instruction			Display OK	If not OK
3	Check 5 V supply line for short to ground	♦ Switch off ignition ♦ Remove plug B from the air-conditioning system regulator ♦ Disconnect plugs from all flap motors ♦ Measure resistance at plug B of the air-conditioning system regulator between pin 20 and ground	∞ Ω ⇒ Step 3	Repair wiring harness → End
4	Check potentiometer in the temperature mixing valve.	♦ Measure resistance between pins 1 and 3 of temperature mixing valve	4 - 5 kΩ ⇒ Step 5	Replace motor for temperature mixing valve. → End
5	Check potentiometer in the footwell defrost flap	♦ Measure resistance between pins 1 and pin 3 of footwell defrost flap	4 - 5 kΩ ⇒ Step 6	Replace motor for footwell defrost flap. → End
6	Check potentiometer in the central flap.	♦ Measure resistance between pins 1 and 3 of the central flap	4 - 5 kΩ Step 7	Repace motor for temperature mixing valve. → End
7	Check potentiometer in der outside air / recirculation valve	♦ Measure resistance between pins 4 and 5 of the outside air / recirculation air valve	4 - 5 kΩ Step 8	Replace motor for temperature mixing valve. → End
8	♦ Replace air-conditioning system regulator		→ End	

Fault code 26

Temperature mixing valve motor - No reaction to activation, signal unclear

Diagnostic conditions

- Ignition on

Note!

- *No control module fault stored*
- *No fault with supply voltage (5 V)*

Possible cause of fault

- Short circuit to voltage/ground or open circuit in the wiring between the air-conditioning system regulator and the temperature mixing valve
- Servo motor for temperature mixing flap faulty or flap does not open/close smoothly.

Affected terminals

Plug B, terminals 9, 13 and 20

Plug D, terminals 2 and 10

Diagnosis/troubleshooting

Work instruction			Display OK	If not OK
1	Visual inspection	• Switch off ignition • Remove connector for temperature mixing valve	Check the connector for corrosion and that it is correctly inserted ⇒ Step 2	Clean connector or plug in correctly → End
2	Check 5 V - supply line to temperature mixing valve motor	• Switch on ignition • Measure voltage at plug of the temperature mixing valve between pin 3 and ground • Measure voltage at plug of the temperature mixing valve between pin 3 and pin 1	approx. 5 V ⇒ Step 3	⇒ Step 6

Work instruction			Display OK	If not OK
3	Check signal line and servo motor line for short to B+	♦ Switch off ignition ♦ Remove plug B from the air-conditioning system regulator ♦ Measure voltage at plug B of the air-conditioning system regulator between pin 13 and ground ♦ Measure voltage at plug D of the air-conditioning system regulator between pin 10 and ground ♦ Measure voltage at plug D of the air-conditioning system regulator between pin 2 and ground	0 V ⇒ Step 4	Repair wiring harness → End
4	Check signal line and servo motor line for short to gound	♦ Measure resistance at plug B of the air-conditioning system regulator between pin 13 and ground ♦ Measure resistance at plug D of the air-conditioning system regulator between pin 10 and ground ♦ Measure resistance at plug D of the air-conditioning system regulator between pin 2 and ground	∞ Ω ⇒ Step 5	Repair wiring harness → End
5	Check signal line and servo motor line for interruption	♦ Switch off ignition ♦ Remove plug B from the air-conditioning system regulator ♦ Measure resistance between plug B on the air-conditioning system regulator pin 13 and plug on temperature mixing valve pin 2 ♦ Measure resistance at plug D of the air-conditioning system regulator between pin 10 and ground ♦ Measure resistance at plug D of the air-conditioning system regulator between pin 2 and ground	< 5Ω ⇒ Step 10	Repair wiring harness → End

Work instruction			Display OK	If not OK
6	Check 5 V supply lead for short to B+	♦ Remove plug B from the air-conditioning system regulator ♦ Switch on ignition ♦ Measure voltage at plug B of the air-conditioning system regulator between pin 20 and ground	0 V ⇒ Step 7	Repair wiring harness → End
7	Check 5 V supply line for short to ground	♦ Measure resistance at plug B of the air-conditioning system regulator between pin 20 and ground	∞ Ω ⇒ Step 8	Repair wiring harness → End
8	Check 5 V supply line and ground line for open circuit	♦ Measure resistance between plug B on the air-conditioning system regulator pin 20 and plug on temperature mixing valve pin 3 ♦ Measure resistance between plug B on the air-conditioning system regulator pin 9 and plug on temperature mixing valve pin 1	< 5Ω ⇒ Step 9	Repair wiring harness → End
9	Check ground line for open circuit	♦ Measure resistance between plug B on the air-conditioning system regulator pin 9 and plug on temperature mixing valve pin 1	< 5Ω ⇒ Step 11	Repair wiring harness → End
10	♦ Repace servo motor for temperature mixing valve		→ End	
11	♦ Replace air-conditioning system regulator		→ End	

Fault code 27

Central flap motor - No reaction to activation, signal unclear

Diagnostic conditions

- Ignition on

Note!

- *No control module fault stored*
- *No fault with supply voltage (5 V)*

Possible cause of fault

- Short circuit to voltage/ground or open circuit in the wiring between the air-conditioning system regulator and the central flap
- Servo motor for central flap faulty or flap does not open/close smoothly.

Affected terminals

Plug B, terminals 9, 14 and 20

Plug D, terminals 4 and 12

Diagnosis/troubleshooting

Work instruction			Display OK	If not OK
1	Visual inspection	♦ Switch off ignition ♦ Remove the connector for the central flap	Check the connector for corrosion and that it is correctly inserted ⇒ Step 2	Clean connector or plug in correctly → End
2	Check 5 V - supply line to central flap motor	♦ Switch on ignition ♦ Measure voltage at plug of the central flap between pin 3 and ground ♦ Measure voltage at plug of the central flap between pin 3 and pin 1	approx. 5 V ⇒ Step 3	⇒ Step 6

Work instruction			Display OK	If not OK
3	Check signal line and servo motor line for short to B+	♦ Switch off ignition ♦ Remove plug B from the air-conditioning system regulator ♦ Measure voltage at plug B of the air-conditioning system regulator between pin 13 and ground ♦ Measure voltage at plug D of the air-conditioning system regulator between pin 10 and ground ♦ Measure voltage at plug D of the air-conditioning system regulator between pin 2 and ground	0 V ⇒ Step 4	Repair wiring harness → End
4	Check signal line and servo motor line for short to gound	♦ Measure resistance at plug B of the air-conditioning system regulator between pin 13 and ground ♦ Measure resistance at plug D of the air-conditioning system regulator between pin 10 and ground ♦ Measure resistance at plug D of the air-conditioning system regulator between pin 2 and ground	∞ Ω ⇒ Step 5	Repair wiring harness → End
5	Check signal line and servo motor line for interruption	♦ Switch off ignition ♦ Remove plug B from the air-conditioning system regulator ♦ Measure resistance between plug B on the air-conditioning system regulator pin 13 and plug on central flap pin 2 ♦ Measure resistance at plug D of the air-conditioning system regulator between pin 10 and ground ♦ Measure resistance at plug D of the air-conditioning system regulator between pin 2 and ground	< 5Ω ⇒ Step 10	Repair wiring harness → End

Work instruction			Display OK	If not OK
6	Check 5 V supply lead for short to B+	♦ Remove plug B from the air-conditioning system regulator ♦ Switch on ignition ♦ Measure voltage at plug B of the air-conditioning system regulator between pin 20 and ground	0 V ⇒ Step 7	Repair wiring harness → End
7	Check 5 V supply line for short to ground	♦ Measure resistance at plug B of the air-conditioning system regulator between pin 20 and ground	∞ Ω ⇒ Step 8	Repair wiring harness → End
8	Check 5 V supply line and ground line for open circuit	♦ Measure resistance between plug B on the air-conditioning system regulator pin 20 and plug on central flap pin 3 ♦ Measure resistance between plug B on the air-conditioning system regulator pin 9 and plug on central flap pin 1	< 5Ω ⇒ Step 9	Repair wiring harness → End
9	Check ground line for open circuit	♦ Measure resistance between plug of air-conditioning system regulator Pin B9 and plug of central flap pin 3	< 5Ω ⇒ Step 11	Repair wiring harness → End
10	♦ Servo motor for central flap		→ End	
11	♦ Replace air-conditioning system regulator		→ End	

Fault code 28

Footwell/defrost flap motor - No reaction to activation, signal unclear

Diagnostic conditions

- Ignition on

Note!

- *No control module fault stored*
- *No fault with supply voltage (5 V)*

Possible cause of fault

- Short circuit to voltage/ground or open circuit in the wiring between the air-conditioning system regulator and the footwell/ defrost flap
- Servo motor for footwell/defrost flap faulty or flap does not open/close smoothly.

Affected terminals

Plug B, terminals 3, 9 and 20

Plug D, terminals 3 and 11

Diagnosis/troubleshooting

Work instruction			Display OK	If not OK
1	Visual inspection	• Switch off ignition • Remove the plug for the footwell/defrost flap	Check the connector for corrosion and that it is correctly inserted ⇒ Step 2	Clean connector or plug in correctly → End
2	Check 5 V - supply line to footwell/defrost flap motor	• Switch on ignition • Measure voltage at plug of the footwell/defrost flap motor between pin 3 and ground • Measure voltage at plug of the footwell/defrost flap motor between pin 3 and pin 1	approx. 5 V ⇒ Step 3	⇒ Step 6

Work instruction			Display OK	If not OK
3	Check signal line and servo motor line for short to B+	♦ Switch off ignition ♦ Remove plug B from the air-conditioning system regulator ♦ Measure voltage at plug B of the air-conditioning system regulator between pin 13 and ground ♦ Measure voltage at plug D of the air-conditioning system regulator between pin 10 and ground ♦ Measure voltage at plug D of the air-conditioning system regulator between pin 2 and ground	0 V ⇒ Step 4	Repair wiring harness → End
4	Check signal line and servo motor line for short to gound	♦ Measure resistance at plug B of the air-conditioning system regulator between pin 13 and ground ♦ Measure resistance at plug D of the air-conditioning system regulator between pin 10 and ground ♦ Measure resistance at plug D of the air-conditioning system regulator between pin 2 and ground	∞ Ω ⇒ Step 5	Repair wiring harness → End
5	Check signal line and servo motor line for interruption	♦ Switch off ignition ♦ Remove plug B from the air-conditioning system regulator ♦ Measure resistance between plug B on the air-conditioning system regulator pin 13 and plug on footwell/defrost flap pin 2 ♦ Measure resistance at plug D of the air-conditioning system regulator between pin 10 and ground ♦ Measure resistance at plug D of the air-conditioning system regulator between pin 2 and ground	< 5Ω ⇒ Step 10	Repair wiring harness → End

Work instruction			Display OK	If not OK
6	Check 5 V supply lead for short to B+	♦ Remove plug B from the air-conditioning system regulator ♦ Switch on ignition ♦ Measure voltage at plug B of the air-conditioning system regulator between pin 20 and ground	0 V ⇒ Step 7	Repair wiring harness → End
7	Check 5 V supply line for short to ground	♦ Measure resistance at plug B of the air-conditioning system regulator between pin 20 and ground	∞ Ω ⇒ Step 8	Repair wiring harness → End
8	Check 5 V supply line and ground line for open circuit	♦ Measure resistance between plug B on the air-conditioning system regulator pin 20 and plug on footwell/defrost flap pin 3 ♦ Measure resistance between plug B on the air-conditioning system regulator pin 9 and plug on footwell/defrost flap pin 1	< 5Ω ⇒ Step 9	Repair wiring harness → End
9	Check ground line for open circuit	♦ Measure resistance between plug on climate control pin B9 and plug on footwell/defrost flap pin 3	< 5Ω ⇒ Step 11	Repair wiring harness → End
10	♦ Replace servo motor for footwell/ defrost flap		→ End	
11	♦ Replace air-conditioning system regulator		→ End	

Fault code 29

Outside air/recirculation air motor - No reaction to activation, signal unclear

Diagnostic conditions

- Ignition on

Note!

- *No control module fault stored*
- *No fault with supply voltage (5 V)*

Possible cause of fault

- Short circuit to voltage/ground or open circuit in the wiring between the air-conditioning system regulator and the outside air/recirculation air
- Servo motor for outside air/recirculation air faulty or flap does not open/close smoothly.

Affected terminals

Plug B, terminals 9, 17 and 20

Plug D, terminals 5 and 13

Diagnosis/troubleshooting

Work instruction			Display OK	If not OK
1	Visual inspection	• Switch off ignition • Unplug connector for outside air / recirculation from servo motor.	Check the connector for corrosion and that it is correctly inserted ⇒ Step 2	Clean connector or plug in correctly → End
2	Check 5 V - supply line to outside air/recirculation air	• Switch on ignition • Measure voltage at plug of outside air/recirculation air between pin 3 and ground • Measure voltage at plug of the outside air/recirculation air between pin 3 and pin 1	approx. 5 V ⇒ Step 3	⇒ Step 6

Work instruction			Display OK	If not OK
3	Check signal line and servo motor line for short to B+	♦ Switch off ignition ♦ Remove plug B from the air-conditioning system regulator ♦ Measure voltage at plug B of the air-conditioning system regulator between pin 13 and ground ♦ Measure voltage at plug D of the air-conditioning system regulator between pin 10 and ground ♦ Measure voltage at plug D of the air-conditioning system regulator between pin 2 and ground	0 V ⇒ Step 4	Repair wiring harness → End
4	Check signal line and servo motor line for short to gound	♦ Measure resistance at plug B of the air-conditioning system regulator between pin 13 and ground ♦ Measure resistance at plug D of the air-conditioning system regulator between pin 10 and ground ♦ Measure resistance at plug D of the air-conditioning system regulator between pin 2 and ground	∞ Ω ⇒ Step 5	Repair wiring harness → End
5	Check signal line and servo motor line for interruption	♦ Switch off ignition ♦ Remove plug B from the air-conditioning system regulator ♦ Measure resistance between plug B on the air-conditioning system regulator pin 13 and plug on servo motor for outside air/recirculation air pin 2 ♦ Measure resistance at plug D of the air-conditioning system regulator between pin 10 and ground ♦ Measure resistance at plug D of the air-conditioning system regulator between pin 2 and ground	< 5Ω ⇒ Step 10	Repair wiring harness → End

Work instruction			Display OK	If not OK
6	Check 5 V supply lead for short to B+	♦ Remove plug B from the air-conditioning system regulator ♦ Switch on ignition ♦ Measure voltage at plug B of the air-conditioning system regulator between pin 20 and ground	0 V ⇒ Step 7	Repair wiring harness → End
7	Check 5 V supply line for short to ground	♦ Measure resistance at plug B of the air-conditioning system regulator between pin 20 and ground	∞ Ω ⇒ Step 8	Repair wiring harness → End
8	Check 5 V supply line and ground line for open circuit	♦ Measure resistance between plug B on the air-conditioning system regulator pin 20 and plug on servo motor for outside air/recirculation air pin 3 ♦ Measure resistance between plug B on the air-conditioning system regulator pin 9 and plug on servo motor for outside air/recirculation air pin 1	< 5Ω ⇒ Step 9	Repair wiring harness → End
9	Check ground line for open circuit	♦ Measure resistance between plug of the air-conditioning system regulator pin B9 and plug on servo motor for outside air/recirculation air pin 5	< 5Ω ⇒ Step 11	Repair wiring harness → End
10	♦ Replace servo motor for outside air/recirculation air		→ End	
11	♦ Replace air-conditioning system regulator		→ End	

Fault code 30

AC - signal unclear

Diagnostic conditions

- This fault can be determined only during the system test.

Possible cause of fault

- Fuse D6 faulty
- Refrigerant pressure too low or non-existent
- Line fault between pressure switch, relay for fresh-air blower, relay for magnetic clutch, DME control module or air-conditioning compressor
- Pressure switch faulty
- Relay for fresh-air blower faulty
- Relay for magnetic clutch faulty

Affected terminals

Plug B, terminal 16

Diagnosis/troubleshooting

Work instruction			Display OK	If not OK
1	Check fuse D6	♦ Check fuse D6	⇒ Step 2	Replace fuse D6
2	Check refrigerant pressure		⇒ Step 3	Fill system Carry out system testing → End
2	Check line between relay for fresh-air blower and pressure switch	♦ Switch off ignition ♦ Remove plug from pressure switch. ♦ Measure voltage at plug of the pressure switch between pin 4 and ground ♦ Switch on ignition	Battery voltage ⇒ Step 3	⇒ Step 10
3	Check pressure switch	♦ Measure resistance at the pressure switch between pins 1 and 4	< 5Ω ⇒ Step 4	Replace pressure switch Carry out system testing → End

Work instruction			Display OK	If not OK
4	Check line between pressure switch and relay for magnetic clutch	♦ Switch off ignition ♦ Disconnect relay for magnetic clutch ♦ Reattach the plugs on pressure switch ♦ Switch on ignition ♦ Measure voltage at relay socket between pin 3 and ground	Battery voltage ⇒ Step 5	⇒ Step 6
5	Check relay for magnetic clutch	♦ Start engine and switch on air-conditioning ♦ Measure resistance at relay socket for magnetic clutch between pin 2 and ground ♦ Measure resistance at relay socket for magnetic clutch between pin 4 and ground	< 5 Ω	⇒ Step 9
6	Check line between pressure switch and relay for magnetic clutch for ground short	♦ Remove plug from pressure switch. ♦ Measure resistance between plug on transponder coil pin 1 and ground	∞ Ω ⇒ Step 7	Repair wiring harness → End
7	Check line between pressure switch and relay for magnetic clutch for open circuit	♦ Measure resistance between plug at pressure switch pin 1 and relay socket for magnetic clutch pin 3	< 5Ω ⇒ Step 10	Repair wiring harness → End
8	♦ Replace relay for magnetic clutch ♦ Perform system test		→ End	
9	♦ Check line between DME control module and relay for magnetic clutch for open circuit ♦ Check line from ground point 8 to relay socket for magnetic clutch for open circuit		→ End	
10	♦ Short circuit to ground or open circuit in the lines for relay for fresh-air blower or for pressure switch or relay for fresh-air blower faulty		→ End	

Fault code 31

Fresh-air blower motor - voltage too low/ too high

Diagnostic conditions

- Ignition on
- Blower switched on

Note!

- *No control module fault stored*
- *Supply voltage OK.*

Possible cause of fault

- Fuse D6 faulty
- Relay for fresh-air blower faulty
- Blower regulator (end setting) faulty
- Fault in the lines between relay for fresh-air blower or blower regulator (end setting) and blower motor.

Affected terminals

Plug B, terminals 10, 11 and 12

Diagnosis/troubleshooting

Work instruction			Display OK	If not OK
1	Check fuse D6		⇒ Step 2	Replace fuse.
2	Check relay for fresh-air blower	♦ Switch off ignition ♦ Remove relay for fresh-air blower ♦ Switch on ignition ♦ Measure voltage at relay socket between pin 3 (terminal 30) and ground ♦ Measure voltage at relay socket between pin 3 and pin 2 ♦ Measure voltage at relay socket between pin 2 and pin 7	Battery voltage ⇒ Step 3	Check line between fuse D 6 and relay socket for open circuit/ short circuit to ground.

Work instruction			Display OK	If not OK
3	Check relay for fresh-air blower	♦ Switch off ignition ♦ Remove plug B from the air-conditioning system regulator ♦ Reconnect heating activation once more ♦ Switch on ignition ♦ Measure voltage between plug B 11 and ground	Battery voltage ⇒ Step 4	Relay for heating activation faulty or short circuit to ground or open circuit in the line between heating activation relay and the air-conditioning system regulator
4	Check blower regulator (end setting)	♦ Switch off ignition ♦ Reconnect plug B to the air-conditioning system regulator ♦ Switch on ignition ♦ Bridge terminals K2 and K3 on blower regulator ♦ Switch on blower	Fault has been remedied ⇒Step 5	⇒ Step 6
5	Check blower regulator (end setting) and line for air-conditioning system regulator	♦ Switch off ignition ♦ Remove plug B from the air-conditioning system regulator ♦ Remove plug from blower regulator ♦ Measure resistance between plug B on the air-conditioning system regulator pin 12 and plug on blower regulator pin K 1	< 5 Ω ⇒Step 9	Repair wiring harness → End
6	Check line to blower motor for short to B+	♦ Switch off ignition ♦ Remove plug from blower motor ♦ Switch on ignition ♦ Measure voltage between plug on the blower motor pin L2 and ground ♦ Measure voltage between plug on the blower motor pin L1 and ground	0 V ⇒ Step 5	Repair wiring harness → End
7	Check line to blower motor for short to ground	♦ Measure resistance between plug on the blower motor pin L2 and ground	∞ Ω ⇒ Step 6	Repair wiring harness → End

Work instruction			**Display OK**	**If not OK**
8	Check line to blower motor for open circuit	♦ Switch off ignition ♦ Measure resistance between plug on blower motor pin L2 and plug B on air-conditioning system regulator pin 10 ♦ Measure resistance between plug on blower motor pin L1 and plug B on air-conditioning system regulator pin 11	< 5Ω ⇒ Step 10	Repair wiring harness → End
9	♦ Replace blower regulator		→ End	
10	♦ Replace air-conditioning system regulator		→ End	

Fault code 32

Control unit - control unit faulty

Diagnostic conditions

- Ignition on

Possible cause of fault

- Control unit faulty

Affected terminals

-

Diagnosis/troubleshooting

Work instruction		Display OK	If not OK
1	♦ Replace air-conditioning system regulator	→ End	

Fault code 34

Air-conditioning CAN Bus off

Diagnostic conditions

- Ignition on

Possible cause of fault

- Short circuit between the two CAN leads (CAN-high and CAN-low)
- Short circuit between CAN-high (Comfort) and ground
- Short circuit between CAN-low (Comfort) and voltage
- A faulty control module connected to CAN comfort bus

Note!

- *The CAN Comfort bus is connected to the following control modules:*
- *Air conditioning*
- *Instrument cluster*

Note!

During the troubleshooting, the plugs on the instrument cluster are re-attached in Step 4 while the plugs on the air-conditioning system control module remain removed. Due to the system, this causes the fault code "9115 air-conditioning control module" to be entered in addition into the fault memory of the instrument cluster.

Affected terminals

Plug B, terminals 1 and 2

Diagnosis/troubleshooting

Work instruction			Display OK	If not OK
1	Check CAN bus leads, CAN-high and CAN-low for short circuit.	♦ Switch off ignition ♦ Remove plug A from the instrument cluster ♦ Remove plug of the air-conditioning system regulator ♦ Measure resistance on plug A of the instrument cluster between pin 14 and pin 30	∞ Ω ⇒ Step 2	Repair wiring harness → End
2	Check CAN bus lead, CAN-high for short to ground	♦ Measure resistance between plug A on instrument cluster pin 14 and ground	∞ Ω ⇒ Step 3	Repair wiring harness → End
3	Check CAN bus lead, CAN-low for short to B+	♦ Switch on ignition ♦ Measure voltage between plug A on instrument cluster pin 30 and ground	0 V ⇒ Step 4	Repair wiring harness → End
4	Determine faulty control unit	♦ Switch off ignition ♦ Reattach the plugs on instrument cluster ♦ Read out fault memory from instrument cluster and check whether the fault "CAN Comfort Bus" has been remedied.	Fault has been remedied ⇒Step 5	The fault is still present ⇒ Step 6
5	♦ Replace air-conditioning system regulator		→ End	
6	♦ Replace instrument cluster		→ End	

Fault code 35

Interface for instrument cluster (see Instrument cluster FS)

Diagnostic conditions

- Ignition on

Possible cause of fault

- Lacking information such as engine speed, outside temperature, speed or sun intensity, which are transferred via the CAN Comfort Bus for the purpose of air-conditioning regulation

Note!

- *If the necessary information is not forthcoming, because the relative control unit is defective or faulty, the air-conditioning sytem regulator functions using substitute values and simultaneously saves the error code 35.*
- *In the menu item, actual values, the substitute values can be read out. The defective control unit or faulty sensor is also indicated, so the fault memory in the instrument cluster can be read out.*
- *If, for examle, actual values of a speed of 60 km/h for the air-conditioning in a stationary vehicle are given, this indicates a fault in the ABS/ PSM System and the consequent inaccurate speed signal.*

Note!

- *The CAN Comfort bus is connected to the following control modules:*
- *Air conditioning*
- *Instrument cluster*

Affected terminals

Plug B, terminals 1 and 2

Diagnosis/troubleshooting

Work instruction		Display OK	If not OK
1	♦ Read out the fault memory of the instrument cluster (see instrument cluster diagnosis)	→ End	

Fault code 36

CAN-timeout instrument cluster

Diagnostic conditions

- Ignition on

Possible cause of fault

- Open circuit of CAN-high Comfort
- Open circuit of CAN-low Comfort
- Instrument cluster faulty

Note!

- *The CAN Comfort is connected to the following control modules:*
- *Air-conditioning control module*
- *Instrument cluster*

Affected terminals

Plug B, terminals 1 and 2

Diagnosis/troubleshooting

Work instruction			Display OK	If not OK
1	Read out instrument cluster fault memory	• Check whether the instrument cluster is still functional. Check power supply and instrument cluster fuse • Read out instrument cluster fault memory and remedy any possible stored faults	The fault is remedied → End	⇒ Step 2
2	Check CAN Comfort high for open circuit	• Switch off ignition • Remove plug A from the instrument cluster • Pull plug off the control module of the air-conditioning system • Measure resistance between plug A on the instrument cluster pin 14 and plug B on control module of air-conditioning sytem pin 1	< 5Ω ⇒ Step 3	Repair wiring harness → End

Work instruction			Display OK	If not OK
3	Check CAN Comfort low for open circuit	♦ Measure resistance between plug A on the instrument cluster pin 30 and plug B on control module of air-conditioning sytem pin 2	< 5Ω ⇒ Step 4	Repair wiring harness. → End
4	♦ Replace instrument cluster		→ End	

Fault code 37

CAN signal PCM

Note!

-
-
-
-

Note!

Diagnostic conditions

- Ignition on

Possible cause of fault

- Missing or implausible signal from PCM(2)
- PCM(2) faulty

Affected pins

-

Diagnosis/troubleshooting

Work instruction		Display OK	If not OK
1	Read out fault memory of the PCM(2) (see ⇒ Rep. Gr. 9101; PCM(2) diagnosis)	→ End	

Fault code 38

CAN-timeout PCM

Note!

-
-
-
-

Note!

Diagnostic conditions

- Ignition on

Possible cause of fault

- Missing CAN message from PCM(2)
- Open circuit of CAN high lead between PCM(2) and CAN comfort connection point
- Open circuit of CAN low lead between PCM(2) and CAN comfort connection point
- PCM(2) is not connected or is faulty

Affected pins

-

Diagnosis/troubleshooting

Work instruction		Display OK	If not OK
1	Read out fault memory of the PCM(2) (see ⇒ Rep. Gr. 9101; PCM(2) diagnosis)	→ End	

Instrument cluster K20

Introduction

The manual contains the diagnosis for the following system:

Instrument cluster sytem K20

General instructions / safety instructions

The following points must be observed during vehicle diagnosis:

- After the battery is connected, volatile memories must be reprogrammed. In the case of radio coding and tuning, the customer must be informed of decoding and the deleted tuner memory.
- After troubleshooting or repairs, erase the fault memory with the Porsche System Tester 2 and carry out a test drive.
- After the test drive, read out the fault memory with Porsche System Tester 2 again.

Danger!

Danger of injury through triggering of driver's airbag

- ***Never hang PST 2 over the steering wheel.***

Caution!

Danger of damage due to improper handling of the battery and the control module connectors!

- ***Never disconnect battery with engine running.***
- ***Never start engine without securely connected battery.***
- ***Never pull off or push on plug connections of the control modules or other electronic components when the ignition is switched on.***

General information on the fault memory

Fault code setting conditions

Fault codes can be set in several circumstances, e.g.:

- battery disconnected
- plug connections disconnected
- power failure

In these circumstances, no fault is present in the system and the fault memory must be erased.

Fault memory Info key F8

In order to be able to assess the fault exactly, the fault memory Info key F8 must be pressed. This information should be saved using the Save key F4 and printed out. If a fault code is stored with "not present" status and no other problems are present, then the fault memory must be erased.

Open circuit - short to ground / voltage short / version; vehicle parameters / counter	
Below short to ground limit value:	There is (present) or was (not present) a short circuit to ground or an open circuit in the circuit to the control module terminal.
Voltage short:	There is (present) or was (not present) a short circuit to voltage.
Checking	Renewed check of fault memory - information after the ignition is switched off and subsequently switched on again. If the fault memory has been remedied, the text changes from "present" to not "present"
Total mileage	Kilometer reading under which the fault has been saved
Vehicle speed	The value indicates the vehicle speed at the time the fault occurred.
Version / vehicle parameters:	Incorrect vehicle coding or coding not yet carried out.
Counter:	When a fault first occurs, a fault entry is made in the fault memory and the counter is simultaneously set to 50. If a fault is present, the counter is incremented by 1 each time the ignition is switched on. The maximum count is 100. The counter is decremented if the fault is no longer present. The fault memory is erased automatically when the counter reaches 0.

Vehicle hand-over

The instrument cluster is converted into delivery mode (low-current mode) in production. As known from other systems (alarm system, PCM, roll-over bar), the instrument cluster must be activated with the Porsche Sytem Tester 2.

1. Connect PST2 and switch on ignition.
2. Select menu item "Special functions" and press the key >>.
3. Follow the instructions displayed by the PST 2.

Tools

The following testers are required for vehicle diagnosis:

Porsche System Tester 2 (PST 2)

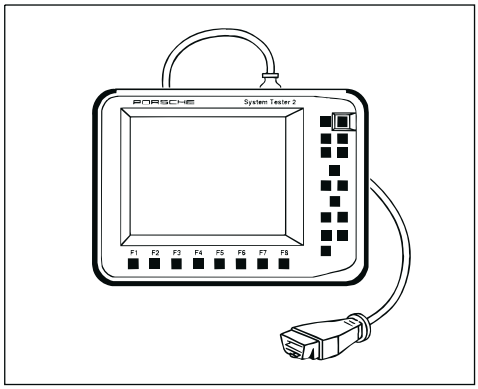

Commercially available digital multimeter

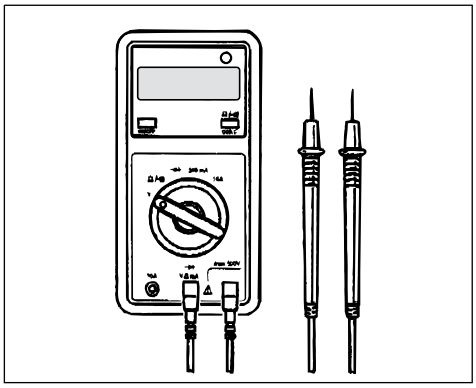

Component arrangement

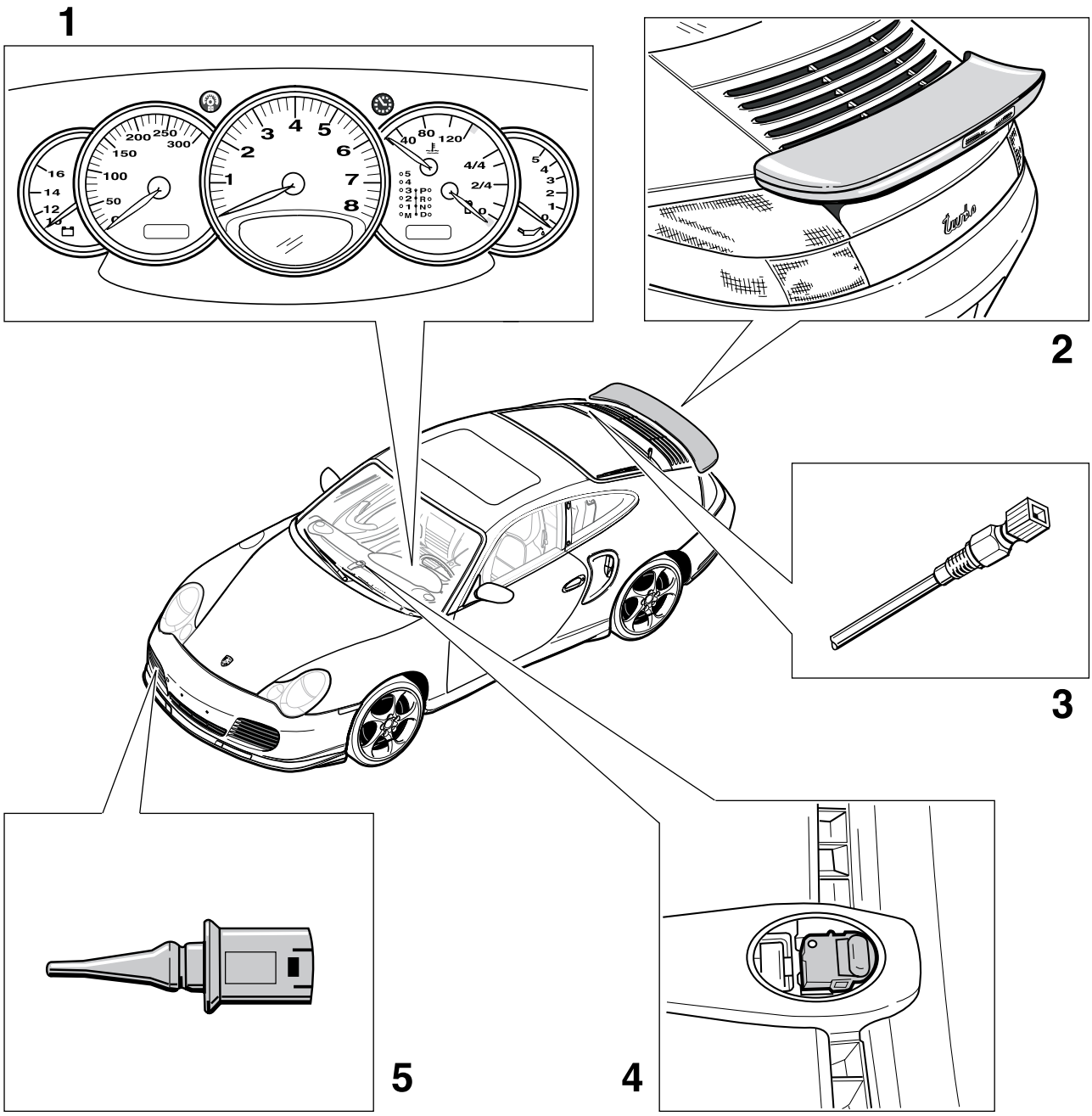

1 - Instrument cluster

2 - Spoiler

3 - Oil level sensor

4 - Sun sensor

5 - Outside temperature sensor

Connector assignment

Instrument cluster connector assignment

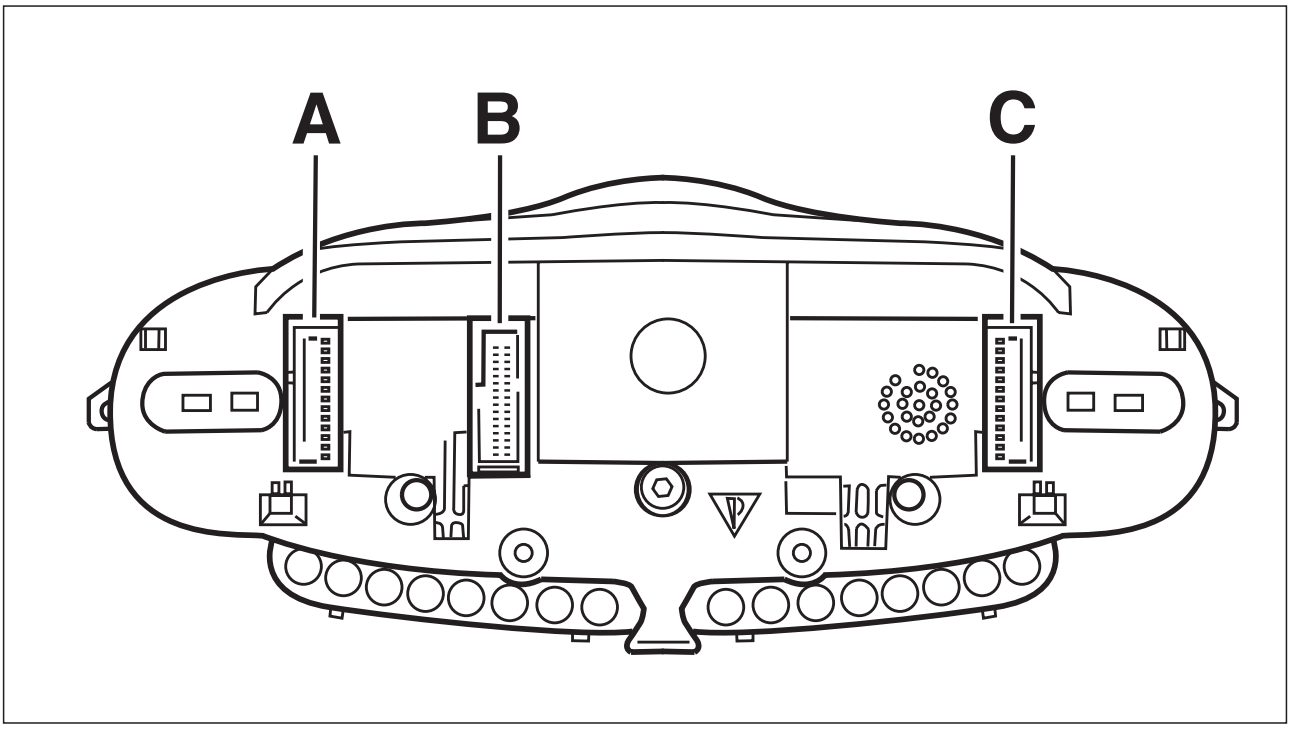

1 - A connector, A green

2 - B connector, B blue

3 - C connector, C grey

Connector A

Pin	Designation	Pin	Designation
1	Terminal 31	17	Terminal 31
2	Terminal 30	18	Terminal 30
3	Terminal 15	19	Terminal 58
4	Key contact terminal 86s	20	Door contact
5	Extend spoiler button	21	Retract spoiler button
6	Spoiler extended check	22	Spoiler retracted check
7	Extend spoiler relay	23	Retract spoiler relay
8	Not used	24	Not used
9	Not used	25	Not used
10	Not used	26	Not used
11	Not used	27	Not used

Connector A

Pin	Designation	Pin	Designation
12	Battery charge	28	Diagnosis, K-line
13	Oil pressure switch	29	Central locking system locked
14	CAN Comfort high	30	CAN Comfort LOW
15	CAN Drive high	31	CAN Drive LOW
16	Brake pad wear	32	Brake pad wear +

Connector B

Pin	Designation	Pin	Designation
1	Outside temperature	17	Ground outside temperature
2	Oil level	18	Ground oil level
3	Sun sensor	19	Ground sun sensor
4	Fuel level sensor	20	Ground tank sensor
5	Oil pressure sensor	21	Belt warning
6	Not used	22	Parking brake
7	Not used	23	Coolant level
8	Not used	24	Washer fluid level
9	Not used	25	Airbag
10	Bulb dim, terminal 58d	26	Left indicator light
11	(LED) dim, terminal 58d	27	Right indicator light
12	(LED) dim, terminal 31d	28	High beam
13	Speedometer A	29	Brake fluid level
14	Not used	30	Check, open cap
15	Not used	31	Not used
16	Not used	32	Not used

Connector C

Pin	Designation	Pin	Designation
1	Cruise control off	17	Cruise control resumption
2	Not used	18	Not used
3	Not used	19	Clutch switch
4	Set cruise control, acceleration	20	Not used
5	Tiptronic 1	21	On-board computer, front lever
6	Tiptronic 2	22	On-board computer, bottom lever

Connector C

Pin	Designation	Pin	Designation
7	Tiptronic 3	23	On-board computer, top lever
8	Tiptronic 4	24	On-board computer, rear lever
9	Tiptronic 5	25	On-board computer, inner lever
10	Information system input	26	ParkAssistent input
11	Information sytem output	27	Not used
12	Gong	28	Not used
13	Engine run signal	29	Not used
14	Not used	30	Not used
15	Not used	31	Not used
16	Not used	32	Not used

Control module function

Events

Note!

The occurence of particular system errors is stored in the event memory. Furthermore, it is possible to read out the time of the occurence by means of the F8 key. The time is shown in minutes. The events stored in the event memory concern components of the instrument cluster and also components of other control modules like PSM or DME. The following sytem errors are stored in the event memory:

Note!

During diagnosis, ABS failure and PSM failure events are entered into the event memory via communication with the PST2 and the respective warning lights are activated during the automatic control module search. In this case, no fault is present and the event memory is to be erased after completion of the diagnosis.

Tester display	Possible causes	Remedy
Brake fluid	♦ Brake fluid level too low	♦ Check brake fluid level and top up brake fluid if necessary.
Brake distributor	♦ System error or system failure of the PSM control module	♦ Read out PSM fault memory (see PSM diagnosis)
Oil pressure too low	♦ Oil pressure too low (low oil level). ♦ Mechanical fault of the sensor for the oil pressure indicator, oil pump faulty or malfunctions in the oil circuit	♦ Check oil level. Drain oil and check whether the specified oil quantity has been filled. ♦ Check sensor for oil pressure indicator
Engine temperature too high	♦ Coolant level too low ♦ Malfunction in the coolant circuit	♦ Check coolant level ♦ Read out DME fault memory (see DME diagnosis)
Engine diagnosis	♦ System error or system failure of the DME control module	♦ Read out DME fault memory (see DME diagnosis)
Valve travel control	♦ System error or system failure of the DME control module	♦ Read out DME fault memory (see DME diagnosis)
PSM failure	♦ Temporary system failure due to communication with the diagnosis tester ♦ System error or system failure of the PSM control module	♦ Read out PSM fault memory (see PSM diagnosis)
ABS failure	♦ System error or system failure of the PSM control module (ABS components)	♦ Read out PSM fault memory (see PSM diagnosis)

Tester display	Possible causes	Remedy
Brake pad wear	♦ Brake pad wear	♦ Check brake pads
Oil level	♦ Oil level too low	♦ Read out fault memory of instrument cluster
Coolant level	♦ Coolant level too low ♦ Faults in the wire from expansion tank to instrument cluster or from ground point 8 to expansion tank	♦ Check coolant level and refill if necessary ♦ Check wire from ground point 8 to expansion tank and from expansion tank to instrument cluster and sensor for coolant level.
Failure engine-compartment fan	♦ Failure engine-compartment fan	♦ Read out DME fault memory (see DME diagnosis)

Coding

The following coding options are available under the menu item "Coding":

Menu item	Function
♦ Country coding	Selection for following country codings: USA, RoW, UK, Canada, Saudi Arabia and Japan ♦ Connect PST 2, switch on ignition and start the automatic control module search. ♦ Select vehicle type 911 (996) and control module instrument cluster ♦ Select menu item Coding ♦ Select menu item "Country coding" ♦ Select the respective country and code with F8 key.
♦ Cruise control	This menu item enables the instrument cluster to be coded after replacing the instrument cluster or after retrofitting a cruise-control actuator. ♦ Connect PST 2, switch on ignition and start the automatic control module search. ♦ Select vehicle type 911 (996) and control module instrument cluster ♦ Select menu item Coding ♦ Select menu item "Cruise-control actuator" ♦ Select the respective menu item with / without cruise-control actuator and code with F8 key

Menu item	Function
♦ Vehicle Ident. No.	It is possible to enter the Vehicle Ident. No. under this menu item after replacing the instrument cluster. ♦ Connect PST 2, switch on ignition and start the automatic control module search. ♦ Select vehicle type 911 (996) and control module instrument cluster ♦ Select menu item Coding ♦ Select menu item "Vehicle Ident. No." ♦ Enter Vehicle Ident. No and code with F8 key
♦ Activate instrument cluster	This menu item enables the instrument cluster to be activated or deactivated. The deactivated instrument cluster is converted into the low-current mode (production mode) and can be automatically activated under the menu item "Vehicle hand-over". ♦ Connect PST 2, switch on ignition and start the automatic control module search. ♦ Select vehicle type 911 (996) and control module instrument cluster ♦ Select menu item Coding ♦ Select menu item "Activate instrument cluster" ♦ Select the desired coding and code with F8 key.
♦ Time	Time entry option ♦ Connect PST 2, switch on ignition and start the automatic control module search. ♦ Select vehicle type 911 (996) and control module instrument cluster ♦ Select menu item Coding ♦ Select menu item "Time" ♦ Enter the time and code with F8 key

Total mileage

It is possible to code the total mileage under this menu item after replacing the instrument cluster.

1. Connect PST 2 and switch on ignition.
2. Select vehicle type 911 (996) and the instrument cluster control module and press the key >>
3. Select the menu item "Transponder key" and press the key >>.
4. You are requested to enter the "Vehicle Ident. No." .
5. Enter Vehicle Ident. No. or accept with the key >>, check the entry and press key F7.

6. Observe the instructions of the diagnosis tester, enter the total mileage with the tabulator key, check and then press the F8 key to code the entered total mileage.

The total mileage can also be read out from the old instrument cluster under the menu item "Control module replacement" and can be transferred into the new instrument cluster if the old replacement instrument is still functional and if it is possible to establish communication with the PST 2.

Tank calibration

See on this subject ⇒ 20; Rep. Gr. 201501 ; Calibrating fuel level sensor system.

Speedometer A

A speed can be simulated under this menu item to check the function of dynamic volume control (speed-dependent volume). If the function of the dynamic volume is switched on and the speed is simulated by means of PST 2, the volume must change according to the speed. The higher the simulated speed, the higher the volume.

Control module replacement

Certain values can be read out of the old instrument cluster and can be tranferred into the new instrument cluster. A prerequisite for this is that the communication can be set up between the old instrument cluster and PST 2. The following values can be read out of the old instrument cluster and can be transmitted into the new instrument cluster:

- Total mileage
- Tank calibration
- Vehicle Ident. No.

Note!

- *The country coding is not read out and transferred via this function.*
- *Correct country coding is a prerequisite of the correct functioning of the instrument cluster.*

Fault overview

Fault code	Fault text	Fault effect
9101	CAN drive bus	Fault memory, system only conditionally functional
9102	CAN comfort bus	Fault memory, system only conditionally functional
9103	CAN transceiver	Fault memory
9110	DME control module	Fault memory, system only conditionally functional
9111	PSM/ABS control module *	Fault memory, system only conditionally functional
9112	Tiptronic control module	Fault memory, system only conditionally functional
9115	Air-conditioning control module	Fault memory, system only conditionally functional
9120	Outside temperature	Failure of outside temperature indicator
9121	Oil pressure	Failure of oil pressure indicator
9122	Tank-fill level	Failure of tank indicator
9123	Oil level	Failure of electronic oil level measurement
9124	Sun sensor, short circuit ground/ B+	Fault memory
9130	Supply voltage	Fault memory
9131	B+	Fault memory, no battery charging (fault in charge process)
9132	Terminal 61	Fault memory, fault in charge process
9133	Terminal 61 low when engine running	Fault memory, fault in charge process
9140	Failure airbag warning light	Fault memory, failure of warning light
9141	Failure of warning light actuator	Fault memory, failure of standby light
9143	Failure of Check Engine warning light	Fault memory, failure of warning light
9144	Failure of ABS warning light	Fault memory, failure of warning light
9150	Spoiler control	Failure of spoiler control

Fault code 9101

CAN drive bus

Diagnostic conditions

- Ignition on

Possible cause of fault

- Short circuit between the two CAN leads (CAN-high and CAN-low)
- Short circuit between CAN-high (drive) and ground
- Short circuit between CAN-low (drive) and voltage
- A faulty control module connected to CAN drive bus

Note!

- *The CAN drive bus is connected to the following control modules:*
- *DME*
- *Tiptronic*
- *PSM and steering angle sensor*
- *Instrument cluster*

Note!

The plug connections of control modules connected to the CAN drive bus are disconnected for trouble shooting. This causes the additional CAN-relevant fault codes, e.g. "9110 DME control module" to be stored in the fault memory of the instrument cluster. These fault codes should be initially ignored and should be deleted on completion of the troubleshooting.

Affected terminals

Plug A, terminals 15 and 31

Diagnosis/troubleshooting

Work instruction			Display OK	If not OK
1	Check CAN bus leads, CAN-high and CAN-low for short circuit.	♦ Switch off ignition ♦ Pull plug A off the instrument cluster ♦ Pull plug off the Tiptronic control module ♦ Pull plug off the PSM control module ♦ Pull off steering angle sensor plug ♦ Pull plug off the DME control module ♦ Measure resistance on plug A of the instrument cluster between pin 15 and pin 31 ♦ Measure resistance between pin 3 and pin 4 on the plug on the DME control module.	∞ Ω ⇒ Step 2	Repair wiring harness → End
2	Check CAN bus lead, CAN-high for short to ground	♦ Measure resistance between plug A on instrument cluster pin 15 and ground ♦ Measure resistance between pin 3 and pin ground on the plug on the DME control module.	∞ Ω ⇒ Step 3	Repair wiring harness → End
3	Check CAN bus lead, CAN-low for short to B+	♦ Switch on ignition ♦ Measure resistance between plug A on instrument cluster pin 31 and ground ♦ Measure voltage between pin 3 and ground on the plug on the DME control module.	0 V ⇒ Step 4	Repair wiring harness → End
4	Determine faulty control module	♦ Switch off ignition ♦ Reconnect all plugs to control modules ♦ Pull off plugs to the control modules (except instrument cluster) individually and read out the fault memory of the instrument cluster and check whether the fault has been remedied.	The fault is remedied by disconnecting the plug connection of a control module. ⇒ Step 5	The fault is still present ⇒ Step 6
5	♦ Replace the control module which was last disconnected from the CAN bus.		→ End	
6	♦ Replace instrument cluster		→ End	

Fault code 9102

CAN comfort bus

Diagnostic conditions

- Ignition on

Possible cause of fault

- Short circuit between the two CAN leads (CAN-high and CAN-low)
- Short circuit between CAN-high (Comfort) and ground
- Short circuit between CAN-low (Comfort) and voltage
- A faulty control module connected to CAN drive bus

Note!

- *The CAN Comfort bus is connected to the following control modules:*
- *Air conditioning*
- *Instrument cluster*

Note!

During the troubleshooting, the plugs on the instrument cluster are re-attached in Step 4 while the plugs on the air-conditioning system control module remain removed. Due to the system, this causes the fault code "9115 air-conditioning control module" to be entered in addition into the fault memory of the instrument cluster.

Affected terminals

Plug A, terminals 14 and 30

Diagnosis/troubleshooting

Work instruction			Display OK	If not OK
1	Check CAN bus leads, CAN-high and CAN-low for short circuit.	♦ Switch off ignition ♦ Pull plug A off the instrument cluster ♦ Pull plug off the air-condioning control module ♦ Measure resistance on plug A of the instrument cluster between pin 14 and pin 30	∞ Ω ⇒ Step 2	Repair wiring harness → End
2	Check CAN bus lead, CAN-high for short to ground	♦ Measure resistance between plug A on instrument cluster pin 14 and ground	∞ Ω ⇒ Step 3	Repair wiring harness → End
3	Check CAN bus lead, CAN-low for short to B+	♦ Switch on ignition ♦ Measure voltage between plug A on instrument cluster pin 30 and ground	0 V ⇒ Step 4	Repair wiring harness → End
4	Replace faulty control module	♦ Switch off ignition ♦ Reattach the plugs on instrument cluster ♦ Read out fault memory from instrument cluster and check whether the fault has been remedied.	Fault has been remedied ⇒Step 5	The fault is still present ⇒ Step 6
5	♦ Replace the air-conditioning system control module.		→ End	
6	♦ Replace instrument cluster		→ End	

Fault code 9103

CAN Transceiver

Diagnostic conditions

- Ignition on

Possible cause of fault

- Instrument cluster faulty

Affected terminals

-

Diagnosis/troubleshooting

Work instruction		Display OK	If not OK
1	♦ Replace instrument cluster	→ End	

Fault code 9110

DME control module

Diagnostic conditions

- Ignition on

Possible cause of fault

- Short circuit between CAN-high and ground
- Open circuit of CAN-high drive
- Open circuit of CAN-low drive
- DME control module faulty

Note!

- *The CAN drive bus is connected to the following control modules:*
- *DME*
- *Tiptronic*
- *PSM and steering angle sensor*
- *Instrument cluster*

Affected terminals

Plug A, terminals 15 and 31

Diagnosis/troubleshooting

Work instruction			Display OK	If not OK
1	Read out DME fault memory	• Read out DME fault memory and remedy any stored faults	The fault is remedied → End	⇒ Step 2
2	Check CAN-high drive for open circuit	• Switch off ignition • Pull plug A off the instrument cluster • Pull plug D off the DME control module • Measure resistance between plug A on the instrument cluster pin 15 and plug D on DME control module pin 36	< 5Ω ⇒ Step 3	Repair wiring harness → End

Work instruction			Display OK	If not OK
3	Check CAN-low Drive for open circuit	♦ Measure resistance between plug A on the instrument cluster pin 31 and plug D on DME control module pin 37	< 5Ω ⇒ Step 4	Repair wiring harness. → End
4	♦ Replace the DME control module		→ End	

Fault code 9111

PSM/ABS control module *

Diagnostic conditions

- Ignition on

Possible cause of fault

- Open circuit of CAN-high drive
- Open circuit of CAN-low drive
- Due to a faulty component, the PSM system has switched off or PSM control module is faulty

Note!

- *The CAN drive bus is connected to the following control modules:*
- *DME*
- *Tiptronic*
- *PSM and steering angle sensor*
- *Instrument cluster*

Affected terminals

Plug A, terminals 15 and 31

Diagnosis/troubleshooting

Work instruction			Display OK	If not OK
1	Read out PSM fault memory	♦ Read out PSM fault memory and remedy any stored faults	The fault is remedied → End	⇒ Step 2
2	Check CAN-high drive for open circuit	♦ Switch off ignition ♦ Pull plug A off the instrument cluster ♦ Pull plug A off the PSM control module ♦ Measure resistance between plug A on the instrument cluster pin 15 and plug on PSM control module pin 24	< 5Ω ⇒ Step 3	Repair wiring harness → End

Work instruction			Display OK	If not OK
3	Check CAN-low drive for open circuit	♦ Measure resistance between plug A on the instrument cluster pin 31 and plug on PSM control module pin 40	< 5Ω ⇒ Step 4	Repair wiring harness. → End
4	♦ Replace the PSM control module		→ End	

Fault code 9112

Tiptronic control module

Diagnostic conditions

- Ignition on

Possible cause of fault

- Due to a faulty component, the Tiptronic control module has switched off (limp-home) or Tiptronic control module is faulty
- Open circuit of CAN-high drive
- Open circuit of CAN-low drive

Note!

- *The CAN drive bus is connected to the following control modules:*
- *DME*
- *Tiptronic*
- *PSM and steering angle sensor*
- *Instrument cluster*

Affected terminals

Plug A, terminals 15 and 31

Diagnosis/troubleshooting

Work instruction			Display OK	If not OK
1	Read out Tiptronic fault memory	♦ Read out Tiptronic fault memory and remedy any stored faults	The fault is remedied → End	⇒ Step 2
2	Check CAN-high drive for open circuit	♦ Switch off ignition ♦ Pull plug A off the instrument cluster ♦ Pull plug D and B off the DME control module ♦ Pull plug off the Tiptronic control module ♦ Measure resistance between plug A on the instrument cluster pin 15 and plug on DME control module pin 36 ♦ Measure resistance between plug B on DME control module pin 4 and plug on Tiptronic control module pin H	< 5Ω ⇒ Step 3	Repair wiring harness → End
3	Check CAN-low drive for open circuit	♦ Measure resistance between plug A on the instrument cluster pin 31 and plug D on DME control module pin 37 ♦ Measure resistance between plug B on DME control module pin 3 and plug on Tiptronic control module pin L	< 5Ω ⇒ Step 4	Repair wiring harness. → End
4	♦ Replace Tiptronic control module to test		→ End	

Fault code 9115

Air-conditioning control module

Diagnostic conditions

- Ignition on

Possible cause of fault

- Open circuit of CAN-high Comfort
- Open circuit of CAN-low Comfort
- Air-conditioning control module

Note!

- *The CAN Comfort is connected to the following control modules:*
- *Air-conditioning control module*
- *Instrument cluster*

Affected terminals

Plug A, terminals 14 and 30

Diagnosis/troubleshooting

Work instruction			Display OK	If not OK
1	Read out air-conditioning system fault memory	♦ Check whether the air-conditioning control module is still functional. Check voltage supply and fuse of the air-conditioning system control module ♦ Read out air-conditioning fault memory and remedy any stored faults	The fault is remedied → End	⇒ Step 2
2	Check CAN Comfort high for open circuit	♦ Switch off ignition ♦ Pull plug A off the instrument cluster ♦ Pull plug off the control module of the air-conditioning system ♦ Measure resistance between plug A on the instrument cluster pin 14 and plug B on control module of air-conditioning sytem pin 1	< 5Ω ⇒ Step 3	Repair wiring harness → End

Work instruction			Display OK	If not OK
3	Check CAN Comfort low for open circuit	♦ Measure resistance between plug A on the instrument cluster pin 30 and plug B on control module of air-conditioning sytem pin 2	< 5Ω ⇒ Step 4	Repair wiring harness. → End
4	♦ Replace the control module of the air-conditioning systems.		→ End	

Fault code 9120

Outside temperature

Diagnostic conditions

- Ignition on

Possible cause of fault

- Outside temperature sensor faulty
- Short circuit to voltage/ground or open circuit in the wiring between the instrument cluster and the outside temperature sensor

Affected terminals

Plug B, terminals 1 and 17

Diagnosis/troubleshooting

Work instruction			Display OK	If not OK
1	Visual inspection	♦ Check outside temperature sensor for external damage ♦ Check plug connection for contact and corrosion	⇒ Step 2	Replace outside temperature sensor in the case of damage or repair plug connection → End
2	Check output voltage of the instrument cluster	♦ Switch off ignition ♦ Unplug connector from the outside temperature sensor ♦ Switch on ignition ♦ Measure voltage between pin 1 and pin 2 of the plug of the outside temperature sensor	approx. 3.4 V ⇒ Step 6	⇒ Step 3
3	Check wire between instrument cluster and outside temperature sensor for short to ground	♦ Switch off ignition ♦ Pull plug B off the instrument cluster ♦ Measure resistance between plug B on instrument cluster pin 1 and ground	∞ Ω ⇒ Step 4	Repair wiring harness → End

Work instruction			Display OK	If not OK
4	Check wires between instrument cluster and outside temperature sensor for short to B+	♦ Switch on ignition ♦ Measure resistance between plug B on instrument cluster pin 1 and ground ♦ Measure voltage between plug B on instrument cluster pin 17 and ground	0 V ⇒ Step 5	Repair wiring harness → End
5	Check wires between instrument cluster and outside temperature sensor for open circuit	♦ Switch off ignition ♦ Measure resistance between plug B on the instrument cluster pin 1 and plug on outside temperature sensor pin 1 ♦ Measure resistance between plug B on the instrument cluster pin 17 and plug on outside temperature sensor pin 2	< 5Ω ⇒ Step 7	Repair wiring harness. → End
6	♦ Replace outside temperature sensor		→ End	
7	♦ Replace instrument cluster		→ End	

Fault code 9121

Oil pressure

Diagnostic conditions

- Engine running

Possible cause of fault

- Sensor for oil pressure indicator faulty
- Short circuit to voltage/ground or open circuit in the wiring between the sensor for oil pressure indicator and instrument cluster

Affected terminals

Plug B, terminal 5

Note!

- *In total, 2 wires are connected to the sensor for the oil pressure indicator. The wire with the terminal designation "WC" (Warning Contact) is connected to the oil pressure switch which connects ground to the instrument cluster in the case of a stationary engine or low oil pressure and thereby actuates the warning light. A display warning is also emitted in the instrument cluster at the same time if the engine is running and the oil pressure is low.*
- *The wire with the terminal designation "G" on the sensor for oil pressure indicator is monitored.*

Affected terminals

Plug B, terminal 5

Diagnosis/troubleshooting

Work instruction			Display OK	If not OK
1	Perform a drive-link test	♦ Select the menu item "pointer" in the drive links menu item ♦ Perform the drive-link test with the key F8 and observe the movement of the oil pressure indicator	The oil pressure indicator is controlled to the top value and then onto value 0 ⇒ Step 2	⇒ Step 7
2	Check output voltage of the instrument cluster	♦ Disconnect wire to Pin G of the sensor for the oil pressure indicator ♦ Switch on ignition ♦ Measure voltage between pin G and ground	approx. 5 V ⇒ Step 6	⇒ Step 3
3	Check wire between instrument cluster and sensor for oil pressure indicator for short to ground	♦ Switch off ignition ♦ Pull plug B off the instrument cluster ♦ Measure resistance between plug B on instrument cluster pin 5 and ground	∞ Ω ⇒ Step 4	Repair wiring harness → End
4	Check wire between instrument cluster and sensor for oil pressure indicator for short to B+	♦ Switch on ignition ♦ Measure voltage between plug B on instrument cluster pin 5 and ground	0 V ⇒ Step 5	Repair wiring harness → End
5	Check wire between instrument cluster and sensor for oil level indicator for open circuit	♦ Switch off ignition ♦ Measure resistance between plug B on the instrument cluster pin 5 and plug on the sensor of oil pressure indicator, pin G	< 5Ω ⇒ Step 7	Repair wiring harness. → End
6	♦ Replace oil pressure indicator		→ End	
7	♦ Replace instrument cluster		→ End	

Fault code 9122

Tank-fill level

Diagnostic conditions

- Ignition on

Possible cause of fault

- Sensor for fuel level faulty
- Short circuit to voltage/ground or open circuit in the wiring between the sensor for fuel level and instrument cluster

Affected terminals

Plug B, terminals 4 and 20

Diagnosis/troubleshooting

Work instruction			Display OK	If not OK
1	Check sensor for fuel level	♦ Switch off ignition ♦ Pull plug off sensor for fuel level ♦ Measure resistance on sensor for fuel level (pin side) between pin 2 and pin 3	Depending on tank contents between 10 Ω and 310 Ω ⇒ Step 2	⇒ Step 6
2	Check output voltage of the instrument cluster	♦ Switch on ignition ♦ Measure voltage on plug of sensor for fuel level between pin 2 and pin 3	approx. 5 V ⇒ Step 6	⇒ Step 3
3	Check wiring between sensor for fuel level and instrument cluster for short to ground	♦ Switch off ignition ♦ Pull plug B off the instrument cluster ♦ Measure resistance on plug B of the instrument cluster between pin 4 and ground ♦ Measure resistance on plug B of the instrument cluster between pin 20 and ground	∞ Ω ⇒ Step 4	Repair wiring harness → End
4	Check wiring between sensor for fuel level and instrument cluster for short to B+	♦ Switch on ignition ♦ Measure voltage between plug B on instrument cluster pin 4 and ground ♦ Measure voltage between plug B on instrument cluster pin 20 and ground	0 V ⇒ Step 5	Repair wiring harness → End

Work instruction			Display OK	If not OK
5	Check wiring between sensor for fuel level and instrument cluster for open circuit	♦ Switch off ignition ♦ Measure resistance between plug B on the instrument cluster pin 4 and plug on the sensor for fuel level, pin 2 ♦ Measure resistance between plug B on the instrument cluster pin 20 and plug on the sensor for fuel level, pin 3	< 5Ω ⇒ Step 7	Repair wiring harness. → End
6	♦ Push plug on sensor for fuel level again ♦ Delete fault memory and check whether the fault appears again. ♦ If so, replace the sensor for fuel level		→ End	
7	♦ Replace instrument cluster		→ End	

Fault code 9123

Oil level

Diagnostic conditions

- Evaluation after triggering of oil level measurement in the on-board computer

Possible cause of fault

- Sensor for oil level indicator faulty
- Short circuit to voltage/ground or open circuit in the wiring between the sensor for oil level indicator and instrument cluster

Note!

- *The fault code 9123 is entered after the oil level measurement is triggered in the event of a fault. The warning "oil level indication failure" is emitted at the same time in the display of the instrument cluster.*
- *After the cause of the fault has been remedied, the oil level measurement must be re-triggered. After the oil level measurement has been completed, the fault changes from "present" to "not present"*

Affected terminals

Connector B, terminals 2 and 18

Diagnosis/troubleshooting

Work instruction			Display OK	If not OK
1	Check wiring between sensor for oil level indicator and instrument cluster for short to B+	♦ Switch off ignition ♦ Disconnect connector B from the instrument cluster ♦ Disconnect connector on sensor for oil level indicator ♦ Switch on ignition ♦ Measure voltage between connector B on instrument cluster pin 2 and ground ♦ Measure voltage between connector B on instrument cluster pin 18 and ground	0 V ⇒ Step 2	Repair wiring harness → End
2	Check wire between oil level filler and instrument cluster for short to ground	♦ Disconnect connector B from the instrument cluster ♦ Measure resistance between connector B on instrument cluster pin 2 and ground	∞ Ω ⇒ Step 3	Repair wiring harness → End
3	Check wiring between sensor for oil level indicator and instrument cluster for open circuit	♦ Switch off ignition ♦ Measure resistance between connector B on the instrument cluster pin 2 and plug on outside temperature sensor pin 1 ♦ Measure resistance between connector B on the instrument cluster pin 18 and plug on the sensor of oil pressure indicator, pin 2	< 5Ω ⇒ Step 4	Repair wiring harness → End
4	Check sensor for oil level indicator	♦ Switch off ignition ♦ Connect connector to sensor for oil level indicator again ♦ Measure resistance on connector B of the instrument cluster between pin 2 and pin 18	18 Ω to 25 Ω ⇒ Step 6	⇒ Step 5
5	♦ Replace sensor for oil level indicator		→ End	
6	♦ Replace instrument cluster		→ End	

Fault code 9124

Sun sensor, short circuit ground/ B+

Diagnostic conditions

- Ignition on

Possible cause of fault

- Short circuit to voltage/ground or open circuit in the wiring between the sun sensor and the instrument cluster
- Sun sensor faulty

Affected terminals

Plug B, terminals 3 and 19

Diagnosis/troubleshooting

Work instruction			Display OK	If not OK
1	Check output voltage of the instrument cluster	♦ Switch off ignition ♦ Pull plug off the sun sensor ♦ Switch on ignition ♦ Measure voltage on plug of sun sensor between pin 2 and pin 3	approx. 5 V ⇒ Step 5	⇒ Step 2
2	Check wire between sun sensor and instrument cluster for short to ground	♦ Pull plug B off the instrument cluster ♦ Pull plug off the control module ♦ Measure resistance between plug B on instrument cluster pin 3 and ground	∞ Ω ⇒ Step 3	Repair wiring harness → End
3	Check wiring between sun sensor and instrument cluster for short to B+	♦ Switch on ignition ♦ Measure voltage between plug B on instrument cluster pin 3 and ground ♦ Measure voltage between plug B on instrument cluster pin 19 and ground	0 V ⇒ Step 4	Repair wiring harness → End

Work instruction			Display OK	If not OK
4	Check wiring between sun sensor and instrument cluster for open circuit	♦ Switch off ignition ♦ Measure resistance between plug B on the instrument cluster pin 3 and plug on sun sensor pin 3 ♦ Measure resistance between plug B on the instrument cluster pin 19 and plug on sun sensor pin 2	< 5Ω ⇒ Step 6	Repair wiring harness. → End
5	♦ Replace sun sensor		→ End	
6	♦ Replace instrument cluster		→ End	

Fault code 9130

Supply voltage

Diagnostic conditions

- Engine running

Note!

The fault memory status (present / not present) is always updated when the motor is running.

Possible cause of fault

- Battery voltage too low

Affected terminals

Plug B, terminals 2 and 18

Diagnosis/troubleshooting

Work instruction			Display OK	If not OK
1	Check battery	♦ Examine battery	⇒ Step 2	Charge or replace battery → End
2	Check input voltage terminal 15	♦ Switch off ignition ♦ Pull plug A off the instrument cluster ♦ Switch on ignition ♦ Measure voltage between plug A on instrument cluster pin 3 and ground	Battery voltage ⇒ Step 3	Corrosion in the plug connection or contact resistance in the supply lead. Check and repair wiring harness → End
3	Check input voltage terminal 30	♦ Measure voltage between plug B on instrument cluster pin 2 and ground ♦ Measure voltage between plug B on instrument cluster pin 18 and ground	Battery voltage ⇒ Step 4	Corrosion in the plug connection or contact resistance in the supply lead. Check and repair wiring harness.
4	Check ground points	♦ Measure the resistance between plug A pin 1 and ground ♦ Measure the resistance between plug A pin 17 and ground	< 5 Ω → End	Check or repair wiring harness → End

Fault code 9131

B+

Diagnostic conditions

- Engine running

Possible cause of fault

- Open circuit of the charge lead between generator and battery (B+)

Note!

Both voltage values terminal 61 and 30 are compared to each other in the instrument cluster. If the voltage value at terminal 30 decreases severely as opposed to terminal 61, the battery is not charged when the vehicle is in motion (e.g. open circuit in B+ wire) and fault 9131 is stored.

Affected terminals

Plug B, terminals 2 and 18

Diagnosis/troubleshooting

Work instruction			Display OK	If not OK
1	Visual inspection	♦ Check B+ connection to generator for fastening and corrosion	⇒ Step 2	Clean or fasten the connection → End
2	Check battery		⇒ Step 3	Replace battery → End
3	Check B+ wire from generator to positive terminal of the battery for open circuit	♦ Loosen B+ wire on generator ♦ Measure resistance to B+ wire and positive terminal of the battery	< 5Ω ⇒ Step 4	⇒ Step 5

Work instruction			Display OK	If not OK
4	Check wire (terminal 30 and terminal 15) for contact resistance	♦ Switch off ignition ♦ Pull plug A off the instrument cluster ♦ Switch on ignition ♦ Measure voltage between plug A, pin 2 and ground ♦ Measure voltage between plug A, pin 18 and ground ♦ Measure voltage between plug A, pin 3 and ground ♦ Measure as a comparative value at both positive battery terminals	Battery voltage ⇒ Step 5	Repair wiring harness → End
5	♦ Repair B+ wire		→ End	

Fault code 9132

Terminal 61

Diagnostic conditions

- Ignition on

Possible cause of fault

- Open circuit in the wire between instrument cluster and generator (terminal 61)
- Generator faulty

Affected terminals

Plug A, terminal 12

Diagnosis/troubleshooting

Work instruction			Display OK	If not OK
1	Visual inspection	♦ Check plug on generator for contact and corrosion.	⇒ Step 2	Push on plug → End
2	Check wire from generator to instrument cluster for open circuit	♦ Pull plug off the generator ♦ Measure resistance between plug A on the instrument cluster pin 12 and plug on generator pin 1 (L)	< 5Ω ⇒ Step 3	Repair wiring harness → End
3	♦ Replace generator		→ End	

Fault code 9133

Terminal 61 low when engine running

Diagnostic conditions

- Engine running

Possible cause of fault

- The voltage value terminal 61 is lower than the battery voltage (generator faulty)
- Short circuit to ground in the wire between instrument cluster and generator (terminal 61)

Affected terminals

Plug A, terminal 12

Diagnosis/troubleshooting

Work instruction			Display OK	If not OK
1	Check input voltage terminal 61	♦ Switch off ignition ♦ Pull plug A off the instrument cluster ♦ Start engine (idle position) ♦ Measure voltage between plug A on instrument cluster pin 12 and ground	Battery voltage ⇒ Step 4	⇒ Step 2
2	Check wire between generator and instrument cluster for short to ground	♦ Switch off ignition ♦ Pull plug off the generator ♦ Measure the resistance between plug on generator pin L and ground	∞ Ω ⇒ Step 3	Repair wiring harness → End
3	♦ Replace generator		→ End	
4	♦ Replace instrument cluster		→ End	

Fault code 9140

Failure of airbag warning light

Diagnostic conditions

- Ignition on

Possible cause of fault

- Instrument cluster faulty

Affected terminals

-

Diagnosis/troubleshooting

Work instruction		Display OK	If not OK
1	♦ Replace instrument cluster	→ End	

Fault code 9142

Failure of cruise control warning light

Diagnostic conditions

- Ignition on

Possible cause of fault

- Instrument cluster faulty

Affected terminals

-

Diagnosis/troubleshooting

Work instruction		Display OK	If not OK
1	♦ Replace instrument cluster	→ End	

Fault code 9143

Failure of Check Engine warning light

Diagnostic conditions

- Ignition on

Possible cause of fault

- Instrument cluster faulty

Affected terminals

-

Diagnosis/troubleshooting

Work instruction		Display OK	If not OK
1	♦ Replace instrument cluster	→ End	

Fault code 9144

Failure of ABS warning light

Diagnostic conditions

- Ignition on

Possible cause of fault

- Instrument cluster faulty

Affected terminals

-

Diagnosis/troubleshooting

Work instruction		Display OK	If not OK
1	♦ Replace instrument cluster	→ End	

Fault code 9150

Spoiler control

Diagnostic conditions

- Vehicle speed higher than 120 km/h and then lower than 60 km/h
- Manual actuation

Note!

- *From a vehicle speed of 120 km/h, the spoiler is extended and retracts again when the speed falls below 60 km/h. This is controlled via the instrument cluster.*
- *By means of microswitches which are attached to the spoiler control, the instrument cluster receives the checkback of faults concerning the spoiler status*
- *The instrument cluster expects the checkback concerning the new status of the spoiler after the speed exceeds or falls below the limit and after relevant activation. If a change in status is not registered despite the control, the fault code 9150 is stored and the warning text "Failure of spoiler control" is emitted on the display.*
- *Depending on the software version of the instrument cluster, only the warning text is displayed without the fault code 9150 being stored.*
- *In GT2 vehicles, depending on the software version, the fault code "9150 spoiler control" is stored (without warning text in display). This is a software problem and the fault entered should be ignored.*

Note!

On failure of the PSM control module, the spoiler extends as soon as the ignition is switched on.

Possible cause of fault

- Fuse D7 faulty
- Relays faulty
- Micro switch faulty
- Short circuit to ground/open circuit in the wiring between instrument cluster and relay carrier or spoiler control
- Spoiler drive faulty

Note!

The relays are in the rear area of the relay carrier. The spoiler is extended via relay no. 3. The spoiler is retracted via relay no. 9 (see wiring diagram)

Affected terminals

Connector A, terminals 6, 7, 22, 23

Spoiler not extending

Diagnosis/troubleshooting

Work instruction			Display OK	If not OK
1	Check fuse	♦ Check fuse D 7	⇒ Step 2	Replace fuse → End
2	Check spoiler status	♦ In the menu item "Input signals", select "Spoiler status" ♦ Spoiler completely retracted	Display in PST2:"Spoiler is retracted" ⇒ Step 3	⇒ Step 13
3	Check spoiler key	♦ In the menu item "Input signals", select "Spoiler key" ♦ Actuate key "Extend spoiler" and perform the function check	Display in PST2:"Extend spoiler key actuated" ⇒ Step 4	Check spoiler key or check the wiring from the spoiler key to the instrument cluster → End
4	Check relay 3 power supply (rear relay carrier)	♦ Switch off ignition ♦ Disconnect relay 3 ♦ Measure voltage between relay socket pin 5 and ground	Battery voltage ⇒ Step 5	Short circuit to ground/ open circuit in the wiring between fuse D7 and relay 3. Repair wiring harness. → End
5	Check ground lead relay 3 (rear relay carrier)	♦ Measure resistance between relay socket pin 4 and ground ♦ Measure resistance between relay socket pin 2 and ground	< 5Ω ⇒ Step 6	Repair wiring harness → End
6	Check control signal from instrument cluster to relay carrier	♦ Switch on ignition ♦ Actuate key "Extend spoiler" and at the same time measure the voltage between plug on relay socket pin 7 and ground	"Extend spoiler" key actuated battery voltage ⇒ Step 7	⇒ Step 10

Work instruction			Display OK	If not OK
7	Replace relay	♦ Switch off ignition ♦ Replace no. 3 on rear relay carrier ♦ Switch on ignition ♦ Actuate key "Extend spoiler"	Spoiler extends →End	⇒ Step 8
8	Check ground lead relay no. 9	♦ Disconnect relay no. 9 from rear relay carrier ♦ Measure resistance between relay socket no. 9, pin 4 and ground	< 5 Ω ⇒Step 9	Repair wiring harness → End
9	Check relay no. 9	♦ Jumper pin 4 and pin 3 on relay no. 9 ♦ Relay no. 3 is plugged in ♦ Actuate key "Extend spoiler"	Spoiler extends ⇒ Step16	⇒ Step 12
10	Check wire between instrument cluster and relay 3 for short to ground	♦ Switch off ignition ♦ Remove connector A from the instrument cluster ♦ Measure resistance between relay socket pin 7 and ground	∞ Ω ⇒ Step 11	Repair wiring harness → End
11	Check wire between instrument cluster and relay 3 for open circuit	♦ Measure resistance between relay socket pin 7 and connector A on the instrument cluster pin 7	< 5Ω ⇒ Step 19	Repair wiring harness → End
12	Check power supply of the spoiler drive	♦ Switch off ignition ♦ Insert relay no. 9 ♦ Disconnect connector from the spoiler drive ♦ Switch on ignition ♦ Actuate key "Extend spoiler" and at the same time, measure the voltage between connector on spoiler drive pin 1 and ground ♦ Actuate key "Extend spoiler" and at the same time measure the voltage between plug on spoiler drive between pin 1 and pin 2	Battery voltage ⇒ Step 17	Check wiring between spoiler drive, relay no. 3 and relay no. 9. → End

Work instruction			Display OK	If not OK
13	Check micro switch	♦ Disconnect plug connection X 23 ♦ Remove microswitches ♦ Actuate top micro switch by hand and at the same time measure the resistance on the plug of the micro switch (pin side) between pin 2 and pin 5 ♦ Actuate bottom micro switch by hand and at the same time measure the resistance on the connector of the microswitch (pin side) between pin 4 and pin 5	< 5Ω ⇒ Step 14	⇒ Step 15
14	Check ground lead between ground point 8 and micro switch for open circuit	♦ Measure resistance between plug connection X 23 pin 5 (sleeve side) and ground	< 5Ω ⇒ Step 18	Repair wiring harness → End
15	♦ Replace microswitch and re-perform the function check. If not O.K., check wiring to instrument cluster.		→ End	
16	♦ Replace no. 9 on rear relay carrier		→ End	
17	♦ Replace spoiler drive		→ End	
18	♦ Check wiring from plug connection X 23 to instrument cluster		→ End	
19	♦ Replace instrument cluster		→ End	

Spoiler not retracting

Work instruction			Display OK	If not OK
1	Check fuse	♦ Check fuse D 7	⇒ Step 2	Replace fuse → End
2	Check spoiler status	♦ In the menu item "Input signals", select "Spoiler status" ♦ Spoiler completely extended	Display in PST2: "Spoiler is extended" ⇒ Step 3	⇒ Step 13
3	Check spoiler key	♦ In the menu item "Input signals", select "Spoiler key" ♦ Actuate key "Retract spoiler" and perform the function check	Display in PST2: "Retract spoiler key actuated" ⇒ Step 4	Check spoiler key or check the wiring from the spoiler key to the instrument cluster. → End

Work instruction			Display OK	If not OK
4	Check relay 9 power supply (rear relay carrier)	♦ Switch off ignition ♦ Disconnect relay 9 ♦ Measure voltage between relay socket pin 5 and ground	Battery voltage ⇒ Step 5	Short circuit to ground/ open circuit in the wiring between fuse D7 and relay 3 or from relay no. 3 to relay no. 9 Repair wiring harness. → End
5	Check ground lead relay 9 (rear relay carrier)	♦ Measure resistance between relay socket pin 4 and ground ♦ Measure resistance between relay socket pin 2 and ground	< 5Ω ⇒ Step 6	Repair wiring harness → End
6	Check control signal from instrument cluster to relay carrier	♦ Switch on ignition ♦ Actuate key "Retract spoiler" and at the same time measure the voltage between connector on relay socket pin 7 and ground	Spoiler key actuated battery voltage ⇒ Step 7	⇒ Step 10
7	Replace relay	♦ Switch off ignition ♦ Replace no. 9 on rear relay carrier ♦ Switch on ignition ♦ Actuate key "Retract spoiler"	Spoiler not retracting →End	⇒ Step 8
8	Check ground lead relay no. 3	♦ Disconnect relay no. 3 from rear relay carrier ♦ Measure resistance between relay socket no.3, pin 4 and ground	< 5 Ω ⇒ Step 9	Repair wiring harness → End
9	Check relay no. 3	♦ Jumper pin 4 and pin 3 on relay no. 3 ♦ Relay no. 9 is plugged in ♦ Actuate spoiler key "Retract spoiler"	Spoiler retracting ⇒ Step 16	⇒ Step 12
10	Check wire between instrument cluster and relay no. 9 for short to ground	♦ Switch off ignition ♦ Remove connector A from the instrument cluster ♦ Measure resistance between relay socket pin 7 and ground	∞ Ω ⇒ Step 11	Repair wiring harness → End
11	Check wire between instrument cluster and relay no. 9 for open circuit	♦ Measure resistance between relay socket pin 7 and connector A on the instrument cluster pin 23	< 5Ω ⇒ Step 19	Repair wiring harness → End

Work instruction			Display OK	If not OK
12	Check power supply of the spoiler drive	♦ Switch off ignition ♦ Disconnect connector from the spoiler drive ♦ Insert both relays ♦ Switch on ignition ♦ Actuate key "Retract spoiler" and at the same time measure the voltage between connector on spoiler drive pin 2 and ground ♦ Actuate key "Extend spoiler" and at the same time measure the voltage between connector on spoiler drive between pin 1 and pin 2	Battery voltage ⇒ Step 16	Check wiring between spoiler drive and relay no. 3 and relay no. 9.
13	Check microswitch	♦ Disconnect plug connection X 23 ♦ Remove microswitches ♦ Actuate top microswitch by hand and at the same time measure the resistance on the plug of the microswitch (pin side) between pin 2 and pin 5 ♦ Actuate bottom microswitch by hand and at the same time measure the resistance on the plug of the microswitch (pin side) between pin 4 and pin 5	< 5Ω ⇒ Step 14	⇒ Step 15
14	Check ground lead between ground point 8 and micro switch for open circuit	♦ Measure resistance between plug connection X 23 pin 5 (sleeve side) and ground	< 5Ω ⇒ Step 18	Repair wiring harness → End
15	♦ Replace microswitch and re-perform the function check. If not O.K., check wiring to instrument cluster.		→ End	
16	♦ Replace relay no. 9 on rear relay carrier		→ End	
17	♦ Replace spoiler drive		→ End	
18	♦ Check wiring from plug connection X 23 to instrument cluster		→ End	
19	♦ Replace instrument cluster		→ End	

Instrument cluster K25; K29; K33; K37;

Introduction

The manual contains the diagnosis for the following system:

Instrument cluster system K25; K29; K33; K37;

General instructions/safety instructions

The following points must be observed during vehicle diagnosis:

- After the battery is connected, volatile memories must be reprogrammed. In the case of radio coding and tuning, the customer must be informed of decoding and the deleted tuner memory.
- After troubleshooting or repairs, erase the fault memory with the 9588 Porsche System Tester II and carry out a test drive.
- After the test drive, read out the fault memory with the 9588 Porsche System Tester II again.

Danger!

Danger of injury through triggering of driver's airbag

- ***Never hang the 9588 Porsche System Tester II over the steering wheel.***

Caution!

Danger of damage due to improper handling of the battery and the control module connectors!

- ***Never disconnect battery with engine running.***
- ***Never start engine without securely connected battery.***
- ***Never pull off or push on plug connections for the control modules or other electronic components when the ignition is switched on.***

General information about the fault memory

Fault code setting conditions

Fault codes can be set in several circumstances, e.g.:

- battery disconnected

- plug connections disconnected
- power failure

In these circumstances, no fault is present in the system and the fault memory must be erased.

Fault memory Info key F8

In order to be able to assess the fault exactly, the fault memory Info key F8 must be pressed. This information should be saved using the Save key F4 and printed out. If a fault code is stored with "not present" status and no other problems are present, then the fault memory must be erased.

Open circuit - short to ground / voltage short / version; vehicle parameters / counter

Below short to ground limit value:	There is (present) or was (not present) a short circuit to ground or an open circuit in the circuit to the control module pin.
Short circuit to B+:	There is (present) or was (not present) a short circuit to voltage.
Checking	Renewed check of fault memory - information after the ignition is switched off and subsequently switched on again. If the fault memory has been remedied, the text changes from "present" to "not present"
Total mileage	Kilometer reading under which the fault has been saved
Vehicle speed	The value indicates the vehicle speed at the time the fault occurred.
Version / vehicle parameters:	Incorrect vehicle coding or coding not yet carried out.
Counter:	When a fault first occurs, a fault entry is made in the fault memory and the counter is simultaneously set to 50. If a fault is present, the counter is incremented by 1 for each "ignition on". The maximum count is 100. The counter is decremented if the fault is no longer present. The fault memory is erased automatically when the counter reaches 0.

Vehicle hand-over

The instrument cluster is converted into delivery mode (low-current mode) in production. As known from other systems (alarm system, PCM, roll-over bar), the instrument cluster must be activated with the 9588 Porsche System Tester II.

1. Connect the 9588 Porsche System Tester II and switch on the ignition.
2. Select the menu item 'Special functions' and press the >> key.
3. Select the menu item 'Vehicle hand-over' and press the >> key.

4. Follow the instructions of the 9588 Porsche System Tester II

Tools

The following testers are required for vehicle diagnosis:

Porsche System Tester II No. 9588

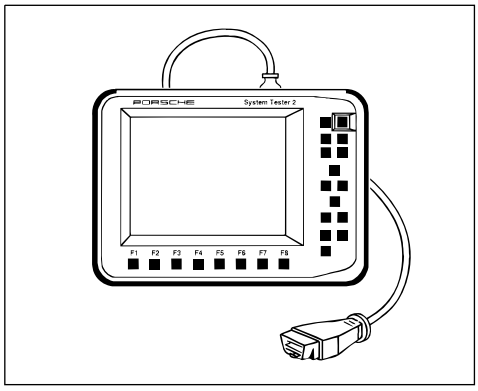

Commercially available digital multimeter

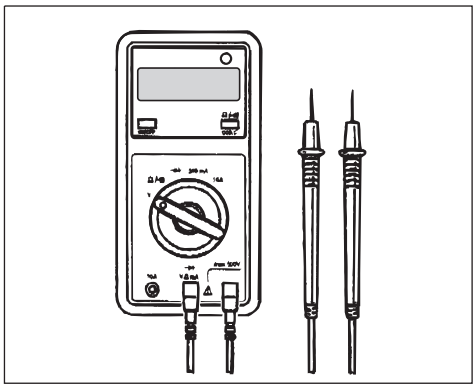

Measurement tool set No. 9684

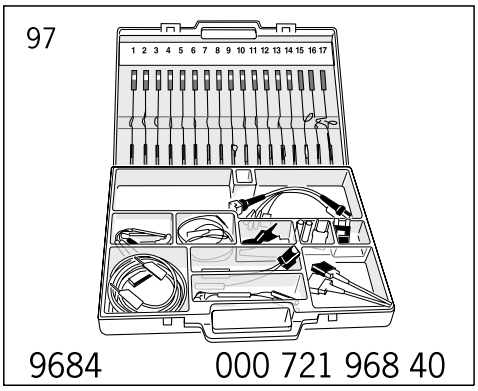

Component arrangement

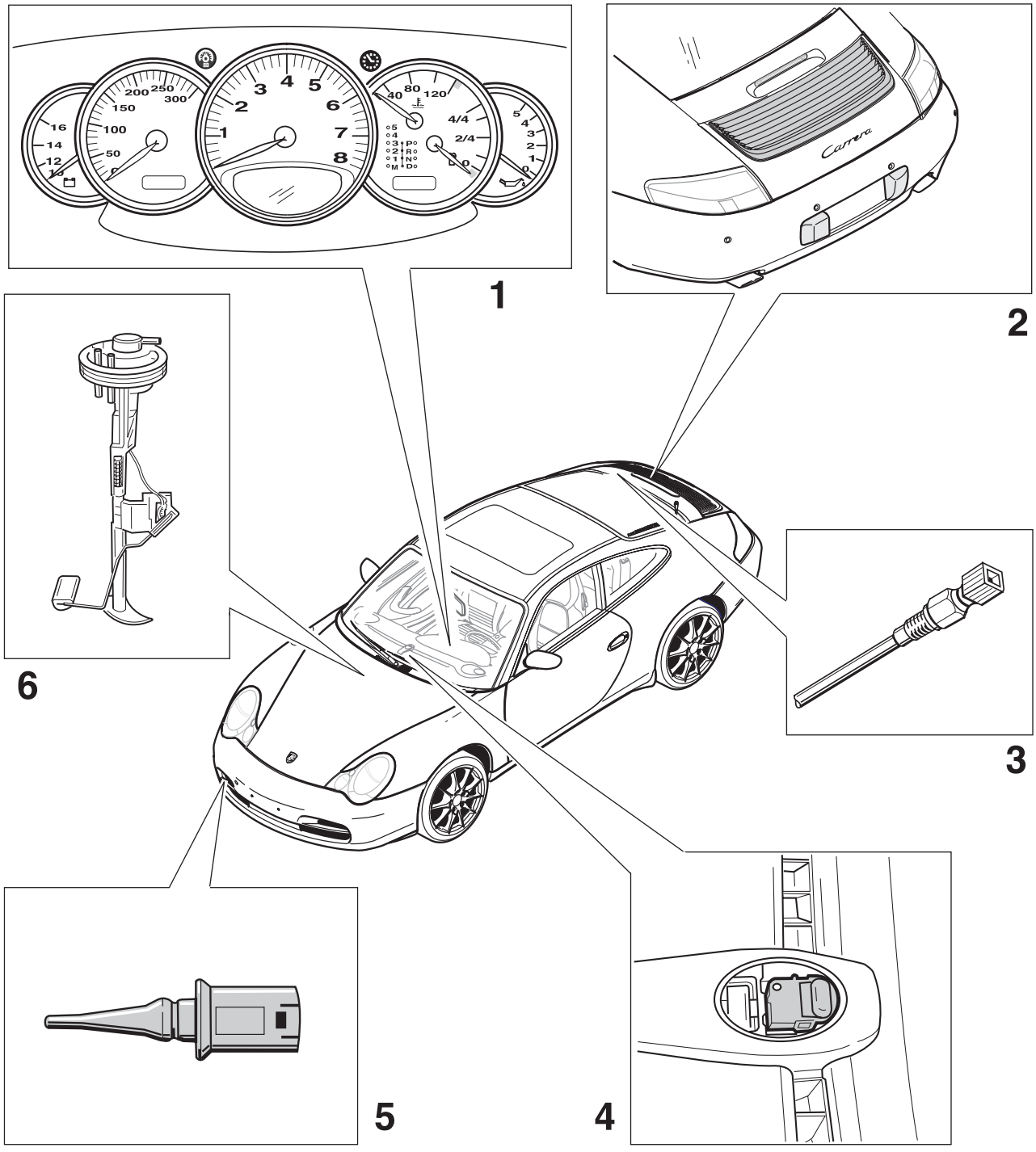

1 - Instrument cluster

2 - Spoiler

3 - Oil level sensor

4 - Sun sensor

5 - Outside temperature sensor

6 - Sensor for fuel level

Connector assignment

Instrument cluster connector assignment

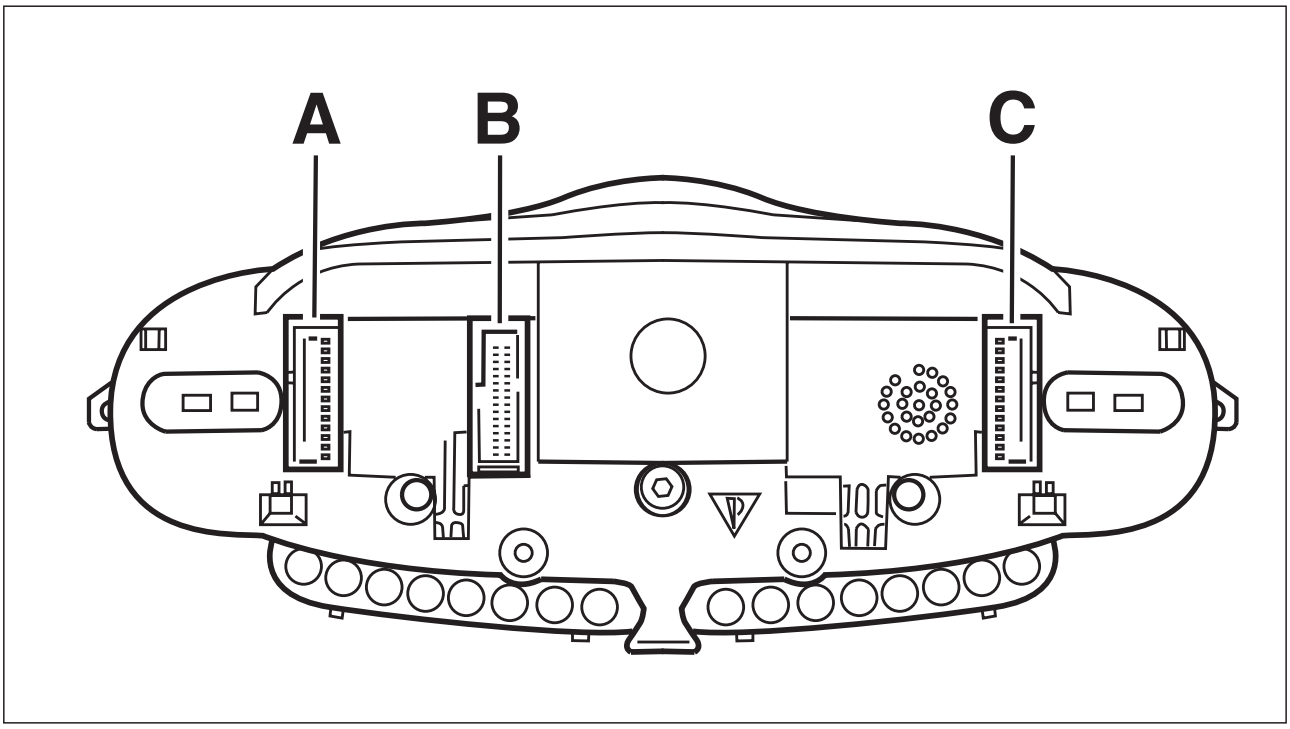

1 - A- Plug A, green

2 - B- Plug B, blue

3 - C- Plug C, grey

Plug A

Pin	Designation	Pin	Designation
1	Terminal 31	17	Terminal 31
2	Terminal 30	18	Terminal 30
3	Terminal 15	19	Terminal 58
4	Key contact terminal 86s	20	Door contact
5	Extend spoiler button	21	Retract spoiler button
6	Spoiler extended check	22	Spoiler retracted check
7	Extend spoiler relay	23	Retract spoiler relay
8	Not used	24	Not used
9	Not used	25	Not used
10	Not used	26	Not used
11	Not used	27	Not used

Plug A

Pin	Designation	Pin	Designation
12	Battery charge	28	Diagnosis, K-line
13	Oil pressure sensor	29	Central locking system locked
14	CAN Comfort high	30	CAN Comfort LOW
15	CAN Drive high	31	CAN Drive LOW
16	Brake pad wear -	32	Brake pad wear +

Plug B

Pin	Designation	Pin	Designation
1	Outside temperature	17	Ground outside temperature
2	Oil level	18	Ground oil level
3	Sun sensor	19	Ground sun sensor
4	Fuel level sensor	20	Ground tank sensor
5	Oil pressure sensor	21	Belt warning
6	Not used	22	Parking brake
7	Not used	23	Coolant level
8	Left parking light	24	Washer fluid level
9	Right parking light	25	Airbag
10	Bulb dim, terminal 58d	26	Left indicator light
11	(LED) dim, terminal 58d	27	Right indicator light
12	(LED) dim, terminal 31d	28	High beam
13	Speedometer A	29	Brake fluid level
14	Not used	30	Check, open cap
15	Not used	31	Gong signal
16	Not used	32	Not used

Plug C

Pin	Designation	Pin	Designation
1	Cruise control off	17	Cruise control resumption
2	Cruise control - distance less	18	Roll-over protection
3	Cabrio convertible light	19	Clutch switch
4	Set cruise control, acceleration	20	Cruise control - distance greater
5	Tiptronic 1	21	On-board computer, front lever
6	Tiptronic 2	22	On-board computer, bottom lever

Plug C

Pin	Designation	Pin	Designation
7	Tiptronic 3	23	On-board computer, top lever
8	Tiptronic 4	24	On-board computer, rear lever
9	Tiptronic 5	25	On-board computer, inner lever
10	Information system input	26	ParkAssist input
11	Information system output	27	Not used
12	Gong	28	Not used
13	Engine run signal/daytime driving light	29	Not used
14	Day/night state	30	Not used
15	Not used	31	Not used
16	Not used	32	Not used

Control module function

Events

Note!

F8

Note!

Tester display	Possible cause	Remedy
Brake fluid	♦ Brake fluid level too low	♦ Check brake fluid level and top up brake fluid if necessary
Brake distributor	♦ System error or system failure of the PSM control module	♦ Read out PSM fault memory (see PSM diagnosis)
Oil pressure too low	♦ Oil pressure too low (low oil level). ♦ Mechanical fault of the sensor for the oil pressure indicator, oil pump faulty or malfunctions in the oil circuit	♦ Check oil level; check whether the specified oil quantity has been filled ♦ Check sensor for oil pressure indicator (instrument cluster fault memory)
Engine temperature too high	♦ Coolant level too low ♦ Malfunction in the coolant circuit	♦ Check coolant level ♦ Read out DME fault memory (see DME diagnosis)
Engine diagnosis	♦ System error or system failure of the DME control module	♦ Read out DME fault memory (see DME diagnosis)
Valve travel control	♦ System error or system failure of the DME control module	♦ Read out DME fault memory (see DME diagnosis)
PSM failure	♦ Temporary system failure due to communication with the Porsche System Tester II No. 9588 ♦ System error or system failure of the PSM control module	♦ Read out PSM fault memory (see PSM diagnosis)

Tester display	Possible cause	Remedy
ABS failure	♦ System error or system failure of the PSM control module (ABS components)	♦ Read out PSM fault memory (see PSM diagnosis)
Brake pad wear	♦ Brake pad wear	♦ Check brake pads
Oil level	♦ Oil level too low	♦ Read out fault memory of instrument cluster
Coolant level	♦ Coolant level too low ♦ Faults in the wire from expansion tank to instrument cluster or from ground point 8 to expansion tank	♦ Check coolant level and refill if necessary ♦ Check wire from ground point 8 to expansion tank and from expansion tank to instrument cluster and sensor for coolant level.
Failure engine-compartment fan	♦ Failure in engine-compartment fan	♦ Read out DME fault memory (see DME diagnosis)

Coding

The following coding options are available under the menu item "Coding":

Menu item	Function
♦ Country coding	Selection for following country codings: USA, RoW, UK, Canada, Saudi Arabia and Japan. ♦ Connect the Porsche System Tester II No. 9588, switch on the ignition and start the automatic control module search. ♦ Select vehicle type 911 (996) and control module instrument cluster. ♦ Select menu item "Coding". ♦ Select menu item "Country coding". ♦ Select the respective country and code with F8 key.
♦ PSM	It is possible to code the instrument cluster under this menu item after replacing the instrument cluster. ♦ Connect the Porsche System Tester II No. 9588, switch on the ignition and start the automatic control module search. ♦ Select vehicle type 911 (996) and control module instrument cluster. ♦ Select menu item "PSM". ♦ Select the respective menu item with/without PSM and code with F8 key.

Menu item	Function
♦ Air conditioning	This menu item enables the instrument cluster to be coded after replacing the instrument cluster or after retrofitting air conditioning. ♦ Connect the Porsche System Tester II No. 9588. ♦ Switch on ignition and start the automatic control module search. ♦ Select vehicle type 911 (996) and control module instrument cluster. ♦ Select menu item "Air conditioning". ♦ Select the respective menu item with/without air conditioning and code with F8 key.
♦ Cruise control	This menu item enables the instrument cluster to be coded after replacing the instrument cluster or after retrofitting a cruise-control actuator. ♦ Connect the Porsche System Tester II No. 9588, switch on the ignition and start the automatic control module search. ♦ Select vehicle type 911 (996) and control module instrument cluster. ♦ Select menu item "Coding". ♦ Select menu item "Cruise-control actuator". ♦ Select the respective menu item with/without cruise-control actuator and code with F8 key.
♦ On-board computer	This menu item enables the instrument cluster to be coded after replacing the instrument cluster or after retrofitting an on-board computer. ♦ Connect the Porsche System Tester II No. 9588, switch on the ignition and start the automatic control module search. ♦ Select vehicle type 911 (996) and control module instrument cluster. ♦ Select menu item "On-Board Computer". ♦ Select the respective menu item with/without on-board computer and code with F8 key.
♦ Vehicle identification number	It is possible to enter the Vehicle Ident. No. under this menu item after replacing the instrument cluster. ♦ Connect the Porsche System Tester II No. 9588, switch on the ignition and start the automatic control module search. ♦ Select vehicle type 911 (996) and control module instrument cluster. ♦ Select menu item "Coding". ♦ Select menu item "Vehicle Ident. No." ♦ Enter vehicle identification number and code with F8 key.

Menu item	Function
♦ Activate instrument cluster	This menu item enables the instrument cluster to be activated or deactivated. The deactivated instrument cluster is converted into the low-current mode (production mode) and can be automatically activated under the menu item "Vehicle hand-over". ♦ Connect the Porsche System Tester II No. 9588, switch on the ignition and start the automatic control module search. ♦ Select vehicle type 911 (996) and control module instrument cluster. ♦ Select menu item "Coding". ♦ Select menu item "Activate instrument cluster". ♦ Select the desired coding and code with F8 key.
♦ Time	Time entry option ♦ Connect the Porsche System Tester II No. 9588, switch on the ignition and start the automatic control module search. ♦ Select vehicle type 911 (996) and control module instrument cluster. ♦ Select menu item "Coding". ♦ Select menu item "Time". ♦ Enter the time and code with F8 key.

Menu item	Function
♦ Synchronise K-number	This menu item enables the synchronisation of the K-number after replacing the instrument cluster or the PCM. ♦ Connect the Porsche System Tester II No. 9588, switch on the ignition and start the automatic control module search. ♦ Select vehicle type 911 (996) and control module instrument cluster. ♦ Select menu item "Coding". ♦ Select menu item "Synchronise K-number". ♦ The Porsche System Tester II No. 9588 automatically controls the rest of the process. ♦ The following display appears: ♦ Updated K-number ♦ Connecting to PCM ♦ K-number updated in PCM ♦ Connecting to instrument cluster ♦ Function successfully completed
♦ Oil level characteristics	Under this menu item, it is possible to adapt the instrument cluster software to the reduced engine oil quantity (approx. 0.5 litre) after replacing the instrument cluster. ♦ Connect the Porsche System Tester II No. 9588, switch on the ignition and start the automatic control module search. ♦ Select vehicle type 911 (996) and control module instrument cluster. ♦ Select menu item "Coding". ♦ Select menu item "New oil level characteristics". ♦ The 'Old/new oil level characteristics' currently stored in the instrument cluster are displayed under "Oil level characteristics". If 'New oil level characteristics' is displayed, the characteristics in the instrument cluster have already been programmed. Return to the start menu with ESC. ♦ Select menu item "Oil level characteristics" and start the function with >>. ♦ The following note is displayed on the Porsche System Tester II No. 9588: 'The new oil level characteristics may only be used in conjunction with the new oil dipstick. Continue with '>>. ♦ Select menu item 'New oil level characteristics' and change the coding with F8. After coding has been successfully completed, 'New oil level characteristics' is displayed in the Porsche System Tester II No. 9588. ♦ Function is successfully completed.

Note!

-
-

- ⇒

Note!

-
-

- ⇒

Total mileage

It is possible to code the total mileage under this menu item after replacing the instrument cluster.

1. Connect the Porsche System Tester II No. 9588 and switch on the ignition.
2. Select vehicle type 911 (996) and the instrument cluster control module and press the key [>>].
3. Select the menu item "Total mileage" and press the key [>>].
4. You are requested to enter the "Vehicle Ident. No."
5. Enter Vehicle Ident. No. or accept with the key [>>], check the entry and press key [F7].
6. Observe the instructions of the Porsche System Tester II No. 9588, enter the total mileage with the tabulator keys, check and then press the [F8] key to code the entered total mileage.

The total mileage can also be read out from the old instrument cluster under the menu item "Control module replacement" and can be transferred into the new instrument cluster if the old instrument cluster is still functional and if it is possible to establish communication with the Porsche System Tester II No. 9588.

Tank calibration

See ⇒ 20; Rep. Gr. 201501; Calibrating fuel level sensor system for information on this topic.

Speedometer A

A speed can be simulated under this menu item to check the function of dynamic volume control (speed-dependent volume). If the function of the dynamic volume is switched on and the speed is simulated by means of the Porsche System Tester II No. 9588, the volume must change according to the speed. The higher the simulated speed, the higher the volume.

Control module replacement

Certain values can be read out of the old instrument cluster and can be transferred into the new instrument cluster. A prerequisite for this is that communication can be established between the old instrument cluster and the Porsche System Tester II No. 9588. The following values can be read out of the old instrument cluster and can be transmitted into the new instrument cluster:

- Total mileage
- Tank calibration
- Vehicle Ident. No.

Note!

-

-

Fault overview

Fault code	Fault text	Fault effect
9101	CAN drive bus	Fault memory, system only conditionally functional
9102	CAN comfort bus	Fault memory, system only conditionally functional
9103	CAN transceiver	Fault memory
9110	DME control module	Fault memory, system only conditionally functional
9111	PSM/ABS control unit	Fault memory, system only conditionally functional
9112	Tiptronic control unit	Fault memory, system only conditionally functional
9114	PCM2 timeout (if control unit coded)	Fault memory, system only conditionally functional
9115	Air-conditioning control unit	Fault memory, system only conditionally functional
9120	Outside temperature	Failure of outside temperature indicator
9121	Oil pressure	Failure of oil pressure indicator
9122	Tank-fill level	Failure of tank indicator
9123	Oil level	Failure of electronic oil level measurement
9124	Sun sensor, short circuit ground/ B+	Fault memory
9130	Supply voltage	Fault memory
9131	B+	Fault memory, no battery charging (fault in charge process)
9132	Terminal 61	Fault memory, fault in charge process
9133	Terminal 61 low when engine running	Fault memory, fault in charge process
9140	Failure of airbag warning light	Fault memory, failure of warning light
9141	Failure of cruise control warning light	Fault memory, failure of standby light
9143	Failure of Check Engine warning light	Fault memory, failure of warning light
9144	Failure of ABS warning light	Fault memory, failure of warning light
9145	Failure of roll-over bar warning light	Fault memory, failure of warning light
9150	Spoiler control	Failure of spoiler control

Fault code 9101

CAN drive bus

Diagnostic conditions

- Ignition on

Possible cause of fault

- Short circuit between the two CAN leads (CAN-high and CAN-low)
- Short circuit between CAN-high (drive) and ground
- Short circuit between CAN-low (drive) and voltage
- A faulty control module connected to CAN drive bus

Note!

-
-
-
-
-

Note!

Affected pins

Instrument cluster plug A, pin 15 and pin 31

Diagnosis/troubleshooting

Work instruction			Display OK	If not OK
1	Check CAN bus leads, CAN-high and CAN-low for short circuit	♦ Switch off ignition ♦ Pull off plug A on instrument cluster ♦ Remove plug from the Tiptronic control module (if present) ♦ Pull off plug on PSM control module ♦ Pull off steering angle sensor plug ♦ Pull off plug on DME control module ♦ Measure resistance on plug A of the instrument cluster between pin 15 and pin 31 ♦ Measure resistance on plug B of the DME control module between pin 3 and pin 4	∞ Ω ⇒ Step 2	Repair wiring harness → End
2	Check CAN bus lead, CAN-high for short to ground	♦ Measure resistance between plug A on instrument cluster pin 15 and ground ♦ Measure resistance on plug B of the DME control module between pin 3 and ground	∞ Ω ⇒ Step 3	Repair wiring harness → End
3	Check CAN bus lead, CAN-low for short to B+	♦ Switch on ignition ♦ Measure resistance between plug A on instrument cluster pin 31 and ground ♦ Measure voltage on plug B of the DME control module between pin 3 and ground	0 V ⇒ Step 4	Repair wiring harness → End
4	Determine faulty control module	♦ Switch off ignition ♦ Reconnect plugs to all control modules ♦ Pull off plugs on control modules (except instrument cluster) individually and read out the fault memory of the instrument cluster and check whether the fault has been remedied	The fault is remedied by disconnecting the plug connection of a control module ⇒ Step 5	The fault is still present ⇒ Step 6
5	♦ Replace the control module which was last disconnected from the CAN bus		→ End	
6	♦ Replace instrument cluster		→ End	

Fault code 9102

CAN comfort bus

Diagnostic conditions

- Ignition on

Possible cause of fault

- Short circuit between the two CAN leads (CAN-high and CAN-low)
- Short circuit between CAN-high (Comfort) and ground
- Short circuit between CAN-low (Comfort) and voltage
- A faulty control module connected to CAN comfort bus

Note!

-
-
-
-

Note!

Affected pins

Instrument cluster connector A, pin 14 and pin 30

Diagnosis/troubleshooting

Work instruction			Display OK	If not OK
1	Check CAN bus leads, CAN-high and CAN-low for short circuit	♦ Switch off ignition ♦ Pull off plug A on instrument cluster ♦ Pull off plug on air-conditioning control module ♦ Pull off plug on PCM2 as of model year 2003 ♦ Measure resistance on plug A of the instrument cluster between pin 14 and pin 30	∞ Ω ⇒ Step 2	Repair wiring harness → End
2	Check CAN bus lead, CAN-high for short to ground	♦ Measure resistance between plug A on instrument cluster pin 14 and ground	∞ Ω ⇒ Step 3	Repair wiring harness → End
3	Check CAN bus lead, CAN-low for short to B+	♦ Switch on ignition ♦ Measure voltage between plug A on instrument cluster pin 30 and ground	0 V ⇒ Step 4	Repair wiring harness → End
4	Determine faulty control module	♦ Switch off ignition ♦ Reattach the plugs on instrument cluster ♦ Read out fault memory from instrument cluster and check whether the fault has been remedied.	Fault has been remedied ⇒ Step 5	The fault is still present Step 6
5	♦ Replace the control module of the air-conditioning system		→ End	
6	♦ Replace instrument cluster		→ End	⇒ Step 7
7	♦ Replace PCM 2 as of model year 2003		→ End	

Fault code 9103

CAN Transceiver

Diagnostic conditions

- Ignition on

Possible cause of fault

- Instrument cluster faulty

Affected pins

-

Diagnosis/troubleshooting

Work instruction		Display OK	If not OK
1	♦ Replace instrument cluster	→ End	

Fault code 9110

DME control module

Diagnostic conditions

- Ignition on

Possible cause of fault

- Short circuit between CAN-high and ground
- Open circuit of CAN-high drive
- Open circuit of CAN-low drive
- DME control module faulty

Note!

-
-
-
-
-

Affected pins

Instrument cluster plug A, pin 15 and pin 31

Diagnosis/troubleshooting

Work instruction			Display OK	If not OK
1	Read out DME fault memory	• Read out DME fault memory and remedy any stored faults that are not relevant to the CAN	The fault is remedied → End	⇒ Step 2
2	Check CAN-high drive for open circuit	• Switch off ignition • Pull off plug A on instrument cluster • Pull off plug D on DME control module • Measure resistance between plug A on the instrument cluster pin 15 and plug D on DME control module pin 36	< 5 Ω ⇒ Step 3	Repair wiring harness → End

Work instruction			Display OK	If not OK
3	Check CAN-low drive for open circuit	♦ Measure resistance between plug A on the instrument cluster pin 31 and plug D on DME control module pin 37	< 5 Ω ⇒ Step 4	Repair wiring harness. → End
4	♦ Replace the DME control module		→ End	

Fault code 9111

PSM/ABS control module

Diagnostic conditions

- Ignition on

Possible cause of fault

- Open circuit of CAN-high drive
- Open circuit of CAN-low drive
- Due to a faulty component, the PSM system has switched off or PSM control module is faulty

Note!

-
-
-
-
-

Affected pins

Instrument cluster plug A, pin 15 and pin 31

Diagnosis/troubleshooting

Work instruction			Display OK	If not OK
1	Read out PSM fault memory	• Read out PSM fault memory and remedy any stored faults	The fault is remedied → End	⇒ Step 2
2	Check CAN-high drive for open circuit	• Switch off ignition • Pull off plug A on instrument cluster • Pull off plug A on PSM control module • Measure resistance between plug A on the instrument cluster pin 15 and plug A on PSM control module pin 24	< 5 Ω ⇒ Step 3	Repair wiring harness → End

Work instruction			Display OK	If not OK
3	Check CAN-low drive for open circuit	♦ Measure resistance between plug A on the instrument cluster pin 31 and plug A on PSM control module pin 40	< 5 Ω ⇒ Step 4	Repair wiring harness → End
4	♦ Replace the PSM control module		→ End	

Fault code 9112

Tiptronic control module

Diagnostic conditions

- Ignition on

Possible cause of fault

- Due to a faulty component, the Tiptronic control module has switched off (limp-home) or Tiptronic control module is faulty
- Open circuit of CAN-high drive
- Open circuit of CAN-low drive

Note!

-
-
-
-
-

Affected pins

Instrument cluster plug A, pin 15 and pin 31

Diagnosis/troubleshooting

Work instruction			Display OK	If not OK
1	Read out Tiptronic fault memory	♦ Read out Tiptronic fault memory and remedy any stored faults	The fault is remedied → End	⇒ Step 2
2	Check CAN-high drive for open circuit	♦ Switch off ignition ♦ Pull off plug A on instrument cluster ♦ Pull off plugs D and B on DME control module ♦ Pull off plug on Tiptronic control module ♦ Measure resistance between plug A on the instrument cluster pin 15 and plug D on DME control module pin 36 ♦ Measure resistance between plug B on DME control module pin 4 and plug on Tiptronic control module pin H	< 5 Ω ⇒ Step 3	Repair wiring harness → End
3	Check CAN-low drive for open circuit	♦ Measure resistance between plug A on the instrument cluster pin 31 and plug D on DME control module pin 37 ♦ Measure resistance between plug B on DME control module pin 3 and plug on Tiptronic control module pin L	< 5 Ω ⇒ Step 4	Repair wiring harness → End
4	♦ Replace the Tiptronic control module		→ End	

Fault code 9114

PCM2 timeout (if control module is coded)

Diagnostic conditions

- Ignition on

Possible cause of fault

- PCM2 is in production mode
- The PCM2 has switched off because of a faulty component or the PCM2 is faulty.

Note!

-
-
-
-

Affected pins

Instrument cluster plug A, pin 14 and pin 30 (CAN Comfort)

Air-conditioning control module plug B, pin 1 and pin 2 (CAN Comfort)

PCM2/CDR23 plug C, pin 1 and pin 2 (CAN Comfort)

Diagnosis/troubleshooting

Work instruction			Display OK	If not OK
1	Read out PCM2 fault memory	♦ Read out PCM2 fault memory and remedy any stored faults	The fault is remedied → End	⇒ Step 2
2	Check CAN Comfort for open circuit	♦ Switch off ignition ♦ Pull off plug A on instrument cluster ♦ Pull off plug B on air-conditioning system control module ♦ Pull off plug C on PCM2/CDR23 ♦ Measure resistance between plug A on the instrument cluster pin 14 and plug B on the air-conditioning system control module pin 1 and plug C on the PCM2/CDR23 pin 1 ♦ Measure resistance between plug A on the instrument cluster pin 30 and plug B on the air-conditioning system control module pin 2 and plug C on the PCM2/CDR23 pin 2	< 5 Ω ⇒ Step 3	Repair wiring harness → End
3	Check CAN Comfort for short circuit to ground	♦ Measure resistance on instrument cluster plug A pin 14 and pin 30 and on pins 1/17.	∞ Ω ⇒ Step 4	Repair wiring harness → End
4	♦ Replace PCM2/CDR23		→ End	

Fault code 9115

Air-conditioning control module

Diagnostic conditions

- Ignition on

Possible cause of fault

- Open circuit of CAN-high Comfort
- Open circuit of CAN-low Comfort
- Air-conditioning control module faulty

Note!

-
-
-
-

Affected pins

Instrument cluster plug A, pin 14 and pin 30

Diagnosis/troubleshooting

Work instruction			Display OK	If not OK
1	Read out air-conditioning system fault memory	♦ Check whether the air-conditioning control module is still functional; check voltage supply and fuse of the air-conditioning system control module ♦ Read out air-conditioning fault memory and remedy any stored faults	The fault is remedied → End	⇒ Step 2
2	Check CAN Comfort high for open circuit	♦ Switch off ignition ♦ Pull off plug A on instrument cluster ♦ Pull off plug on air-conditioning control module ♦ Pull off plug on PCM2 ♦ Measure resistance between plug A on the instrument cluster pin 14 and plug B on control module of air-conditioning system pin 1	< 5 Ω ⇒ Step 3	Repair wiring harness → End
3	Check CAN Comfort low for open circuit	♦ Measure resistance between plug A on the instrument cluster pin 30 and plug B on control module of air-conditioning system pin 2	< 5 Ω ⇒ Step 4	Repair wiring harness → End
4	♦ Replace the control module of the air-conditioning system		→ End	

Fault code 9120

Outside temperature

Diagnostic conditions

- Ignition on

Possible cause of fault

- Outside temperature sensor faulty
- Short circuit to voltage/ground or open circuit in the wiring between the instrument cluster and the outside temperature sensor

Affected pins

Instrument cluster plug B, pin 1 and pin 17

Diagnosis/troubleshooting

Work instruction			Display OK	If not OK
1	Visual inspection	♦ Check outside temperature sensor for external damage ♦ Check plug connection for contact and corrosion	⇒ Step 2	Replace outside temperature sensor in the case of damage or repair plug connection → End
2	Check output voltage of the instrument cluster	♦ Switch off ignition ♦ Pull off plug on outside temperature sensor ♦ Switch on ignition ♦ Measure voltage between pin 1 and pin 2 of the plug of the outside temperature sensor	approx. 3.4 V ⇒ Step 6	⇒ Step 3
3	Check wire between instrument cluster and outside temperature sensor for short to ground	♦ Switch off ignition ♦ Pull off plug B on instrument cluster ♦ Measure resistance between plug B on instrument cluster pin 1 and ground	∞ Ω ⇒ Step 4	Repair wiring harness → End

Work instruction			Display OK	If not OK
4	Check wires between instrument cluster and outside temperature sensor for short to B+	♦ Switch on ignition ♦ Measure voltage between plug B on instrument cluster pin 1 and ground ♦ Measure voltage between plug B on instrument cluster pin 17 and ground	0 V ⇒ Step 5	Repair wiring harness → End
5	Check wires between instrument cluster and outside temperature sensor for open circuit	♦ Switch off ignition ♦ Measure resistance between plug B on instrument cluster pin 1 and plug on outside temperature sensor pin 1 ♦ Measure resistance between plug B on instrument cluster pin 17 and plug on outside temperature sensor pin 2	< 5 Ω ⇒ Step 7	Repair wiring harness → End
6	♦ Replace outside temperature sensor		→ End	
7	♦ Replace instrument cluster		→ End	

Fault code 9121

Oil pressure

Diagnostic conditions

- Engine running

Possible cause of fault

- Sensor for oil pressure indicator faulty
- Short circuit to voltage/ground or open circuit in the wiring between the sensor for oil pressure indicator and instrument cluster

Affected pins

Instrument cluster plug B, pin 5

Note!

Diagnosis/troubleshooting

Work instruction			Display OK	If not OK
1	Perform a drive-link test	♦ Select the menu item "Pointer" in the "Drive links" menu item ♦ Perform the drive-link test with the key F8 and observe the movement of the oil pressure indicator	The oil pressure indicator is controlled to the top value and then to value 0 ⇒ Step 2	⇒ Step 7
2	Check output voltage of the instrument cluster	♦ Disconnect wire to pin G of the sensor for the oil pressure indicator ♦ Switch on ignition ♦ Measure voltage between pin G and ground	approx. 5 V ⇒ Step 6	⇒ Step 3
3	Check wire between instrument cluster and sensor for oil pressure indicator for short to ground	♦ Switch off ignition ♦ Pull off plug B on instrument cluster ♦ Measure resistance between plug B on instrument cluster pin 5 and ground	∞ Ω ⇒ Step 4	Repair wiring harness → End
4	Check wire between instrument cluster and sensor for oil pressure indicator for short to B+	♦ Switch on ignition ♦ Measure voltage between plug B on instrument cluster pin 5 and ground	0 V ⇒ Step 5	Repair wiring harness → End
5	Check wire between instrument cluster and sensor for oil level indicator for open circuit	♦ Switch off ignition ♦ Measure resistance between plug B on instrument cluster pin 5 and plug on the sensor for oil pressure indicator, pin G	< 5 Ω ⇒ Step 7	Repair wiring harness → End
6	♦ Replace oil pressure indicator		→ End	
7	♦ Replace instrument cluster		→ End	

Fault code 9122

Tank level

Diagnostic conditions

- Ignition on

Possible cause of fault

- Short circuit to voltage/ground or open circuit in the wiring between the sensor for fuel level and instrument cluster
- Sensor for fuel level faulty

Affected pins

Instrument cluster plug B, pin 4 and pin 20

Note!

Diagnosis/troubleshooting

Work instruction			Display OK	If not OK
1	Check sensor for fuel level	♦ Switch off ignition ♦ Pull off plug on sensor for fuel level ♦ Measure resistance on sensor for fuel level (pin side) between pin 2 and pin 3	Depending on tank contents between 10 Ω and 310 Ω ⇒ Step 2	⇒ Step 6
2	Check output voltage of the instrument cluster	♦ Switch on ignition ♦ Measure voltage on plug of sensor for fuel level between pin 2 and pin 3	approx. 5 V ⇒ Step 6	⇒ Step 3

Work instruction			Display OK	If not OK
3	Check wiring between sensor for fuel level and instrument cluster for short to ground	♦ Switch off ignition ♦ Pull off plug B on instrument cluster ♦ Measure resistance on plug B of instrument cluster between pin 4 and ground ♦ Measure resistance on plug B of instrument cluster between pin 20 and ground	∞ Ω ⇒ Step 4	Repair wiring harness → End
4	Check wiring between sensor for fuel level and instrument cluster for short to B+	♦ Switch on ignition ♦ Measure voltage between plug B on instrument cluster pin 4 and ground ♦ Measure voltage between plug B on instrument cluster pin 20 and ground	0 V ⇒ Step 5	Repair wiring harness → End
5	Check wiring between sensor for fuel level and instrument cluster for open circuit	♦ Switch off ignition ♦ Measure resistance between plug B on instrument cluster pin 4 and plug on the sensor for fuel level, pin 2 ♦ Measure resistance between plug B on instrument cluster pin 20 and plug on the sensor for fuel level, pin 3	< 5 Ω ⇒ Step 7	Repair wiring harness → End
6	♦ Push plug on sensor for fuel level again ♦ Delete fault memory and check whether the fault appears again ♦ If so, replace the sensor for fuel level		→ End	
7	♦ Replace instrument cluster		→ End	

Fault code 9123

Oil level

Diagnostic conditions

- Evaluation after triggering of oil level measurement in the on-board computer

Possible cause of fault

- Short circuit to ground/voltage or open circuit in the wiring between the oil level indicator and instrument cluster
- Oil level indicator faulty

Note!

-

-

Affected pins

Instrument cluster plug B, pin 2 and pin 18

Diagnosis/troubleshooting

Work instruction			Display OK	If not OK
1	Check wiring between oil level indicator and instrument cluster for short to B+	♦ Switch off ignition ♦ Pull off plug B on instrument cluster ♦ Pull off plug on sensor for oil level indicator ♦ Switch on ignition ♦ Measure voltage between plug B on instrument cluster pin 2 and ground ♦ Measure voltage between plug B on instrument cluster pin 18 and ground	0 V ⇒ Step 2	Repair wiring harness → End
2	Check wire between oil level sender and instrument cluster for short to ground	♦ Switch off ignition ♦ Measure resistance between plug B on instrument cluster pin 2 and ground ♦ Measure resistance between plug B on instrument cluster pin 18 and ground	∞ Ω ⇒ Step 3	Repair wiring harness → End
3	Check wiring between sensor for oil level indicator and instrument cluster for open circuit	♦ Switch off ignition ♦ Measure resistance between plug B on instrument cluster pin 2 and plug on the oil level sender pin 2 ♦ Measure resistance between plug B on instrument cluster pin 18 and plug on the sensor for the oil level indicator pin 4	< 5 Ω ⇒ Step 4	Repair wiring harness → End
4	Check sensor for oil level indicator	♦ Switch off ignition ♦ Reconnect plug to sensor for oil level indicator ♦ Measure resistance on plug B on instrument cluster between pin 2 and pin 18	18 Ω to 25 Ω ⇒ Step 6	⇒ Step 5
5	♦ Replace sensor for oil level indicator		→ End	
6	♦ Replace instrument cluster		→ End	

Fault code 9124

Sun sensor, short circuit to ground/B+

Diagnostic conditions

- Ignition on

Possible cause of fault

- Short circuit to ground/voltage or open circuit in the wiring between the sun sensor and the instrument cluster
- Sun sensor faulty

Affected pins

Instrument cluster plug B, pin 3 and pin 19

Diagnosis/troubleshooting

Work instruction			Display OK	If not OK
1	Check output voltage of the instrument cluster	♦ Switch off ignition ♦ Pull off plug on sun sensor ♦ Switch on ignition ♦ Measure voltage on plug of sun sensor between pin 2 and pin 3	approx. 5 V ⇒ Step 5	⇒ Step 2
2	Check wire between sun sensor and instrument cluster for short to ground	♦ Pull off plug B on instrument cluster ♦ Measure resistance between plug B on instrument cluster pin 3 and ground	∞ Ω ⇒ Step 3	Repair wiring harness → End
3	Check wiring between sun sensor and instrument cluster for short to B+	♦ Switch on ignition ♦ Measure voltage between plug B on instrument cluster pin 3 and ground ♦ Measure voltage between plug B on instrument cluster pin 19 and ground	0 V ⇒ Step 4	Repair wiring harness → End
4	Check wiring between sun sensor and instrument cluster for open circuit	♦ Switch off ignition ♦ Measure resistance between plug B on instrument cluster pin 3 and plug on sun sensor pin 3 ♦ Measure resistance between plug B on instrument cluster pin 19 and plug on sun sensor pin 2	< 5 Ω ⇒ Step 6	Repair wiring harness → End

Work instruction		Display OK	If not OK
5	♦ Replace sun sensor	→ End	
6	♦ Replace instrument cluster	→ End	

Fault code 9130

Supply voltage

Diagnostic conditions

- Engine running

Note!

Possible cause of fault

- Battery voltage too low

Affected pins

Instrument cluster plug B, pin 2, pin 3, pin 17 and pin 18

Diagnosis/troubleshooting

Work instruction			Display OK	If not OK
1	Check battery	♦ Examine battery	⇒ Step 2	Charge or replace battery → End
2	Check input voltage at terminal 15	♦ Switch off ignition ♦ Pull off plug A on instrument cluster ♦ Switch on ignition ♦ Measure voltage between plug A on instrument cluster pin 3 and ground	Battery voltage ⇒ Step 3	Contact resistance in the supply lead; check and repair wiring harness → End
3	Check input voltage at terminal 30	♦ Measure voltage between plug B on instrument cluster pin 2 and ground ♦ Measure voltage between plug B on instrument cluster pin 18 and ground	Battery voltage ⇒ Step 4	Contact resistance in the supply lead; check and repair wiring harness
4	Check ground points	♦ Measure resistance between plug A pin 1 and ground ♦ Measure resistance between plug A pin 17 and ground	< 5 Ω → End	Check ground points or repair wiring harness → End

Fault code 9131

B+

Diagnostic conditions

- Engine running

Possible cause of fault

- Open circuit of the charge lead between generator and battery (B+)

Note!

Affected pins

Instrument cluster plug B, pin 2 and pin 18

Diagnosis/troubleshooting

Work instruction			Display OK	If not OK
1	Visual inspection	♦ Check B+ connection to generator for fastening and corrosion	⇒ Step 2	Clean or fasten the connection → End
2	Check battery		⇒ Step 3	Replace battery → End
3	Check B+ wire from generator to positive terminal of the battery for open circuit	♦ Loosen B+ wire to generator ♦ Measure resistance to B+ wire and positive terminal of the battery	< 5 Ω ⇒ Step 4	⇒ Step 5

Work instruction			Display OK	If not OK
4	Check wiring (pin 30 and pin 15) for contact resistance	♦ Switch off ignition ♦ Pull off plug A on instrument cluster ♦ Switch on ignition ♦ Measure voltage between plug A pin 2 and ground ♦ Measure voltage between plug A pin 18 and ground ♦ Measure voltage between plug A pin 3 and ground ♦ Measure voltage as a comparative value at both battery terminals	Battery voltage ⇒ Step 5	Repair wiring harness → End
5	♦ Repair B+ wire		→ End	

Fault code 9132

Pin 61

Diagnostic conditions

- Ignition on

Possible cause of fault

- Open circuit in the wire between instrument cluster and generator (pin 61)
- Generator faulty

Affected pins

Instrument cluster plug A, pin 12

Diagnosis/troubleshooting

Work instruction			Display OK	If not OK
1	Visual inspection	♦ Check plug on generator for contact and corrosion	⇒ Step 2	Connect plug → End
2	Check wire from generator to instrument cluster for open circuit	♦ Pull off plug on generator ♦ Measure resistance between plug A on instrument cluster pin 12 and plug on generator pin 1 (L)	< 5 Ω ⇒ Step 3	Repair wiring harness → End
3	♦ Replace generator		→ End	

Fault code 9133

Pin 61 low when engine running

Diagnostic conditions

- Engine running

Possible cause of fault

- Short circuit to ground in the wire between instrument cluster and generator (pin 61)
- Voltage value at pin 61 is lower than battery positive voltage (generator faulty)

Affected pins

Instrument cluster plug A, pin 12

Diagnosis/troubleshooting

Work instruction			Display OK	If not OK
1	Check input voltage at pin 61	• Switch off ignition • Pull off plug A on instrument cluster • Start engine (idle speed) • Measure voltage between plug A on instrument cluster pin 12 and ground	Battery voltage ⇒ Step 4	⇒ Step 2
2	Check wire between generator and instrument cluster for short to ground	• Switch off ignition • Pull off plug on generator • Measure resistance between plug on generator pin L and ground	∞ Ω ⇒ Step 3	Repair wiring harness → End
3	• Replace generator		→ End	
4	• Replace instrument cluster		→ End	

Fault code 9140

Failure of airbag warning light

Diagnostic conditions

- A drop in voltage in the vehicle electrical system (jump lead starting) can lead to fault code 9140
- Ignition on

Possible cause of fault

♦ Instrument cluster faulty

Affected pins

-

Diagnosis/troubleshooting

Work instruction		Display OK	If not OK
1	♦ Remove ignition key and switch on ignition again	The fault is remedied → End	⇒ Step 2
2	♦ Replace instrument cluster	→ End	

Fault code 9142

Failure of cruise control warning light

Diagnostic conditions

- Ignition on

Possible cause of fault

- A drop in voltage in the vehicle electrical system (jump lead starting) can lead to fault code 9142
- Instrument cluster faulty

Affected pins

-

Diagnosis/troubleshooting

Work instruction		Display OK	If not OK
1	♦ Remove ignition key and switch on ignition again	The fault is remedied → End	⇒ Step 2
2	♦ Replace instrument cluster	→ End	

Fault code 9143

Failure of Check Engine warning light

Diagnostic conditions

- Ignition on

Possible cause of fault

- A drop in voltage in the vehicle electrical system (jump lead starting) can lead to fault code 9143
- Instrument cluster faulty

Affected pins

-

Diagnosis/troubleshooting

Work instruction		Display OK	If not OK
1	♦ Remove ignition key and switch on ignition again	The fault is remedied → End	⇒ Step 2
2	♦ Replace instrument cluster	→ End	

Fault code 9144

Failure of ABS warning light

Diagnostic conditions

- Ignition on

Possible cause of fault

- A drop in voltage in the vehicle electrical system (jump lead starting) can lead to fault code 9144
- Instrument cluster faulty

Affected pins

-

Diagnosis/troubleshooting

Work instruction		Display OK	If not OK
1	♦ Remove ignition key and switch on ignition again	The fault is remedied → End	⇒ Step 2
2	♦ Replace instrument cluster	→ End	

Fault code 9145

Failure of roll-over bar warning light

Diagnostic conditions

- A drop in voltage in the vehicle electrical system (jump lead starting) can lead to storing fault code 9145.
- Ignition on.

Possible cause of fault

♦ Instrument cluster faulty

Affected pins

-

Diagnosis/troubleshooting

Work instruction		Display OK	If not OK
1	♦ Remove ignition key and switch on ignition again	The fault is remedied → End	⇒ Step 2
2	♦ Replace instrument cluster	→ End	

Fault code 9150

Spoiler control

Diagnostic conditions

- Vehicle speed higher than 120 km/h (75 mph) and then lower than 60 km/h (37.5 mph)
- Manual actuation

Note!

♦

♦

♦

♦

♦

Note!

Possible cause of fault

- ♦ Fuse D7 faulty
- ♦ Relay faulty
- ♦ Microswitch faulty
- ♦ Short circuit to ground/open circuit in the wiring between instrument cluster and relay carrier or spoiler control
- ♦ Spoiler drive faulty

Note!

Affected pins

Instrument cluster plug A, pin 6, pin 7, pin 22 and pin 23

Spoiler not extending

Diagnosis/troubleshooting

Work instruction			Display OK	If not OK
1	Check fuse	♦ Check fuse D7	⇒ Step 2	Replace fuse → End
2	Check spoiler status	♦ In the menu item "Input signals", select "Spoiler status" ♦ Spoiler completely retracted	Display in Porsche System Tester II No. 9588: "Spoiler is retracted" ⇒ Step 3	⇒ Step 13
3	Check spoiler button	♦ In the menu item "Input signals", select "Spoiler button" ♦ Actuate "Extend spoiler" button and perform the function check	Display in Porsche System Tester II No. 9588: ""Extend spoiler" button actuated" Step 4	Check spoiler button or check the wiring from the spoiler button to the instrument cluster → End
4	Check power supply relay 3 (rear relay carrier)	♦ Switch off ignition ♦ Disconnect relay 3 ♦ Measure voltage between relay socket pin 5 and ground	Battery voltage ⇒ Step 5	Short circuit to ground/open circuit in the wire between fuse D7 and relay 3 Repair wiring harness → End
5	Check ground lead relay 3 (rear relay carrier)	♦ Measure resistance between relay socket pin 4 and ground ♦ Measure resistance between relay socket pin 2 and ground	< 5 Ω ⇒ Step 6	Repair wiring harness → End
6	Check control signal from instrument cluster to relay carrier	♦ Switch on ignition ♦ Actuate "Extend spoiler" button and at the same time measure voltage between relay socket pin 7 and ground	"Extend spoiler" button actuated Battery voltage ⇒ Step 7	⇒ Step 10

Work instruction			Display OK	If not OK
7	Replace relay	♦ Switch off ignition ♦ Replace no. 3 on rear relay carrier ♦ Switch on ignition ♦ Actuate "Extend spoiler" button	Spoiler extends → End	⇒ Step 8
8	Check ground lead relay no. 9	♦ Pull off relay no. 9 on rear relay carrier ♦ Measure resistance between relay socket no. 9, pin 4 and ground	< 5 Ω ⇒ Step 9	Repair wiring harness → End
9	Check relay no. 9	♦ Jumper pin 4 and pin 3 on relay no. 9 ♦ Relay no. 3 is plugged in ♦ Actuate button "Extend spoiler"	Spoiler extends ⇒ Step 16	⇒ Step 12
10	Check wire between instrument cluster and relay no. 3 for short to ground	♦ Switch off ignition ♦ Pull off plug A on instrument cluster ♦ Measure resistance between relay socket pin 7 and ground	∞ Ω ⇒ Step 11	Repair wiring harness → End
11	Check wire between instrument cluster and relay 3 for open circuit	♦ Measure resistance between relay socket pin 7 and plug A on instrument cluster pin 7	< 5Ω ⇒ Step 19	Repair wiring harness → End
12	Check power supply of the spoiler drive	♦ Switch off ignition ♦ Insert relay no. 9 ♦ Disconnect plug from the spoiler drive ♦ Switch on ignition ♦ Actuate "Extend spoiler" button and at the same time measure voltage between plug X 23 on spoiler drive pin 1 and ground ♦ Actuate "Retract spoiler" button and at the same time measure voltage on plug X 23 of spoiler drive between pin 1 and pin 3	Battery voltage ⇒ Step 17	Check wiring between spoiler drive, relay no. 3 and relay no. 9. → End

Work instruction			Display OK	If not OK
13	Check microswitches	♦ Disconnect plug connection X 23 ♦ Remove microswitches ♦ Actuate top microswitch manually and at the same time measure resistance on microswitch plug (pin side) between pin 2 and pin 5 ♦ Actuate bottom microswitch manually and at the same time measure resistance on microswitch plug (pin side) between pin 4 and pin 5	< 5Ω ⇒ Step 14	⇒ Step 15
14	Check ground lead between ground point 8 and microswitch for open circuit	♦ Measure resistance between plug connection X 23 pin 5 (sleeve side) and ground	< 5Ω ⇒ Step 18	Repair wiring harness → End
15	♦ Replace microswitch and repeat the function check. If not OK, check wiring to instrument cluster.		→ End	
16	♦ Replace relay no. 9 on rear relay carrier		→ End	
17	♦ Replace spoiler drive		→ End	
18	♦ Check wiring from plug connection X 23 to instrument cluster		→ End	
19	♦ Replace instrument cluster		→ End	

Spoiler not retracting

Work instruction			Display OK	If not OK
1	Check fuse	♦ Check fuse D7	⇒ Step 2	Replace fuse → End
2	Check spoiler status	♦ In the menu item "Input signals", select "Spoiler status" ♦ Spoiler completely extended	Display in Porsche System Tester II No. 9588: "Spoiler is extended" ⇒ Step 3	⇒ Step 13
3	Check spoiler button	♦ In the menu item "Input signals", select "Spoiler button" ♦ Actuate "Retract spoiler" button and perform the function check	Display in Porsche System Tester II No. 9588: ""Retract spoiler" button actuated" ⇒ Step 4	Check spoiler button or check the wiring from the spoiler button to the instrument cluster → End

Work instruction			Display OK	If not OK
4	Check power supply relay 9 (rear relay carrier)	♦ Switch off ignition ♦ Disconnect relay 9 ♦ Measure voltage between relay socket pin 5 and ground	Battery voltage ⇒ Step 5	Short circuit to ground/ open circuit in the wiring between fuse D7 and relay 3 or from relay no. 3 to relay no. 9 Repair wiring harness → End
5	Check ground lead relay 9 (rear relay carrier)	♦ Measure resistance between relay socket pin 4 and ground ♦ Measure resistance between relay socket pin 2 and ground	< 5 Ω ⇒ Step 6	Repair wiring harness → End
6	Check control signal from instrument cluster to rear relay carrier	♦ Switch on ignition ♦ Actuate "Retract spoiler" button and at the same time measure voltage between relay socket pin 7 and ground	Spoiler button actuated Battery voltage ⇒ Step 7	⇒ Step 10
7	Replace relay no. 9	♦ Switch off ignition ♦ Replace relay no. 9 on rear relay carrier ♦ Switch on ignition ♦ Actuate "Retract spoiler" button	Spoiler retracting → End	⇒ Step 8
8	Check ground lead relay no. 3	♦ Pull off relay no. 3 on rear relay carrier ♦ Measure resistance between relay socket no.3, pin 4 and ground	< 5 Ω ⇒ Step 9	Repair wiring harness → End
9	Check relay no. 3	♦ Jumper pin 4 and pin 3 on relay no. 3 ♦ Relay no. 9 is plugged in ♦ Actuate "Retract spoiler" spoiler button	Spoiler retracting ⇒ Step 16	⇒ Step 12
10	Check wire between instrument cluster and relay no. 9 for short to ground	♦ Switch off ignition ♦ Pull off plug A on instrument cluster ♦ Measure resistance between relay socket pin 7 and ground	∞ Ω ⇒ Step 11	Repair wiring harness → End
11	Check wire between instrument cluster and relay no. 9 for open circuit	♦ Measure resistance between relay socket pin 7 and plug A on instrument cluster pin 23	< 5Ω ⇒ Step 19	Repair wiring harness → End

Work instruction			Display OK	If not OK
12	Check power supply of the spoiler drive	♦ Switch off ignition ♦ Disconnect plug from the spoiler drive ♦ Insert both relays ♦ Switch on ignition ♦ Actuate "Retract spoiler" button and at the same time measure voltage between spoiler drive plug pin 2 and ground ♦ Actuate "Extend spoiler" button and at the same time measure the voltage between plug on spoiler drive between pin 1 and pin 2	Battery voltage ⇒ Step 16	Check wiring between spoiler drive and relay no. 3 and relay no. 9
13	Check microswitches	♦ Disconnect plug connection X 23 ♦ Remove microswitches ♦ Actuate top microswitch manually and at the same time measure resistance on microswitch plug (pin side) between pin 2 and pin 5 ♦ Actuate bottom microswitch manually and at the same time measure resistance on microswitch plug (pin side) between pin 4 and pin 5	< 5Ω ⇒ Step 14	⇒ Step 15
14	Check ground lead between ground point 8 and microswitch for open circuit	♦ Measure resistance between plug connection X 23 pin 5 (sleeve side) and ground	< 5Ω ⇒ Step 18	Repair wiring harness → End
15	♦ Replace microswitch and repeat the function check; if not OK, check wiring to instrument cluster		→ End	
16	♦ Replace relay no. 9 on rear relay carrier		→ End	
17	♦ Replace spoiler drive		→ End	
18	♦ Check wiring from plug connection X 23 to instrument cluster		→ End	
19	♦ Replace instrument cluster		→ End	

Parking assistant P02

Introduction

The manual contains the diagnosis for the following system:

ParkAssistent P02

General instructions / safety instructions

The following points must be observed during vehicle diagnosis:

- The ParkAssistent signals readiness with a short signal tone, provided that the ignition is switched on and the reverse gear is engaged
- After the battery is connected, volatile memories must be reprogrammed. In the case of radio coding and tuning, the customer must be informed of decoding and the deleted tuner memory.
- After troubleshooting or repairs, erase the fault memory with the Porsche System Tester 2 and carry out a test drive.
- After the test drive, read out the fault memory with Porsche System Tester 2 again.

Caution!

Danger of damage due to improper handling of the battery and the control module connectors!

- ***Never disconnect battery with engine running.***
- ***Never start engine without securely connected battery.***
- ***Never pull off or push on plug connections of the control modules or other electronic components when the ignition is switched on.***

Warning!

Danger of injury and damage to vehicle when the vehicle is rolling backwards!

- ***Reverse gear must be engaged and the ignition must be switched on; otherwise the ParkAssistent System is deactivated.***

Warning!

Danger of injury and damage to vehicle when the system limits are reached. The system does not free the driver from his/her responsibility to be careful!

- ***Short obstacles such as a person lying down cannot be detected.***
- ***The reflecting behaviour of the system can be impaired by sound-absorbent obstacles such as powder snow or sound-reflecting obstacles such as glass surfaces.***
- ***Very thin obstacles and obstacles with no reflecting surfaces cannot be detected.***

General information on the fault memory

Fault code setting conditions

Fault codes can be set in several circumstances, e.g.:

- Power failure
- Plug connections disconnected

In these circumstances, no fault is present in the system and the fault memory must be erased.

Fault memory Info key F8

In order to be able to assess the fault exactly, the fault memory Info key F8 must be pressed. This information should be saved using the Save key F4 and printed out. If a fault code is stored with "not present" status and no other problems are present, then the fault memory must be erased.

Open circuit - short to ground / voltage short / coding / vehicle parameters

Open circuit or short to ground:	There is (present) or was (not present) a short-circuit to ground or an open circuit in the circuit to the control module terminal.
Voltage short:	There is (present) or was (not present) a short circuit to voltage.
Coding/ vehicle parameters	Incorrect vehicle coding or coding not yet carried out.

Tools

Porsche System Tester 2 (PST 2)

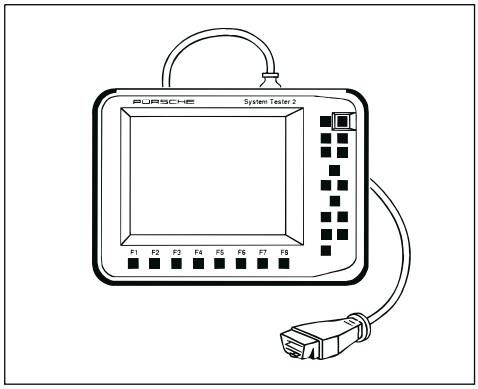

Commercially available digital multimeter

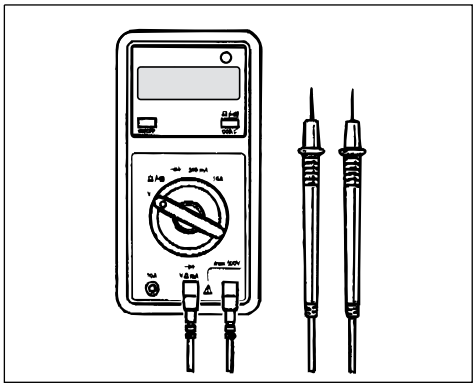

Component arrangement

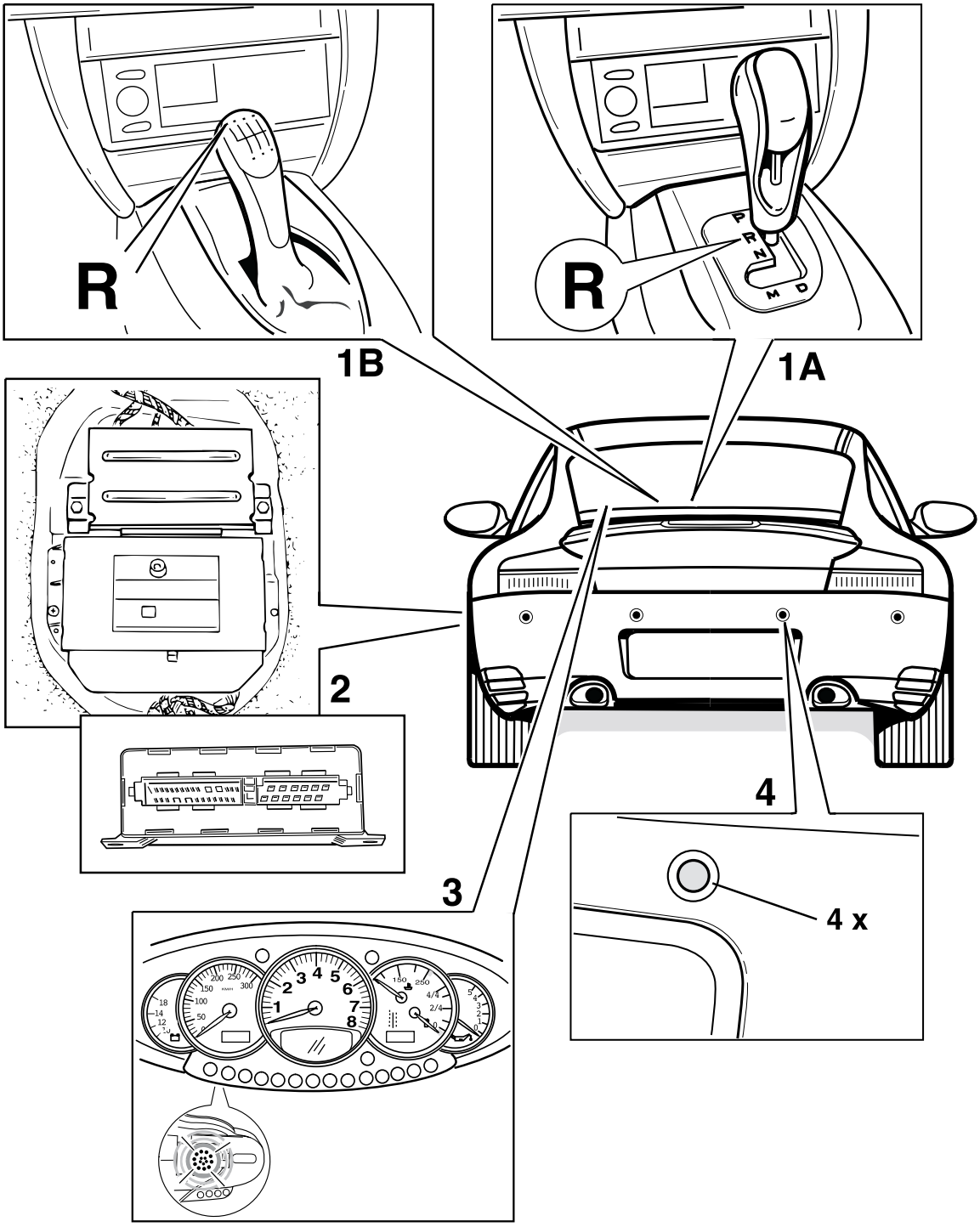

1 - Shift lever

- ❑ A - Vehicle with Tiptronic transmission
- ❑ B - Vehicle with manual transmission

2 - Control module

3 - Loudspeaker in the instrument cluster

4 - Sensors for ParkAssistent

Connector assignment

Connector assignment, ParkAssistent control module

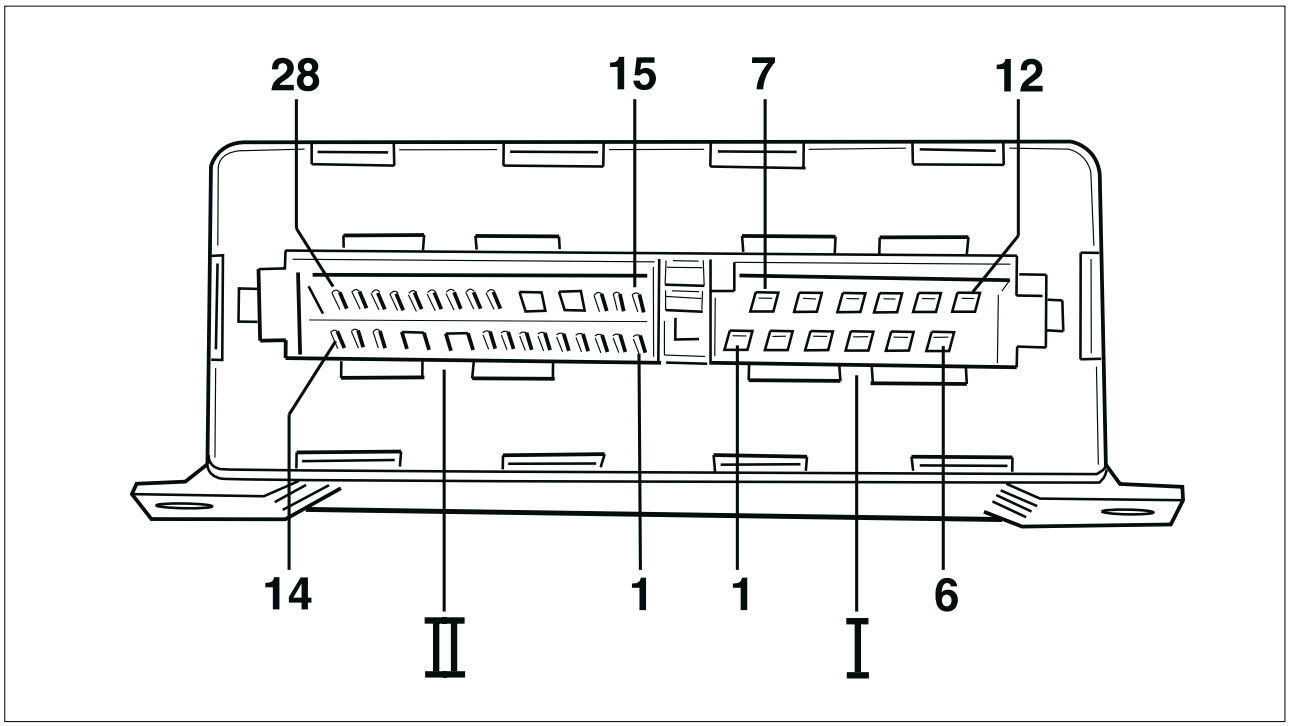

Plug I, 12 pole

Pin	Designation	Pin	Designation
1	Outside signal sensor on left	5	Positive sensors
2	Inside signal sensor on left	6	Not used
3	Inside signal sensor on right	7	Ground sensors
4	Outside signal sensor on right		

Plug II, 28 pole

Pin	Designation	Pin	Designation
1	Loudspeaker in the instrument cluster	11 to 12	Not used
2	Not used	13	Reverse gear signal
3	Diagnosis K-line	14 to 17	Not used
4 to 9	Not used	18	Terminal 15
10	Terminal 31	19 to 28	Not used

Control module function

Modify coding

Under the menu item Modify coding, the vehicle type 911 (996) can be coded.

Procedure

1. Start automatic control module search.
2. Select control module ParkAssistent.
3. Select menu item Modify coding.
4. Select vehicle type and press the F8 key

Fault overview

Fault code	Fault text	Fault effect
1	Outer right sensor faulty, present	System fault
2	Inner right sensor faulty, present	System fault
3	Inner left sensor faulty, present	System fault
4	Outer left sensor faulty, present	System fault
5	Control unit supply voltage, present < 9 V or 16.5 V	System fault
6	Sensor supply voltage, present < 6.7 V	System fault
7	Send/receive pulse, present	System fault
8	EPROM data faulty or parameter set not programmed, present	System fault
9	EPROM data faulty or parameter set coded incorrectly, present	System fault

Fault code 1

Outer right sensor faulty

Diagnostic conditions

- Ignition on
- Reverse gear engaged
- Continuous fault tone emitted after engaging reverse gear

Possible cause of fault

- Short circuit to voltage/ground or open circuit in supply leads between the control module and the outside sensor on the right
- Outside sensor on right is faulty
- Control module is faulty

Affected terminals

Terminals I/4, I/5 and I/7

Diagnosis/troubleshooting

Work instruction			**Display OK**	**If not OK**
1	Visual inspection	♦ Check the outside sensor on the right for external damage. ♦ Check the sensor plug for damage and corrosion.	⇒ Step 2	Replace outside sensor on the right or repair sensor plug. → End
2	Check supply voltage of the sensor	♦ Switch off ignition. ♦ Pull plug off the outside sensor on the right. ♦ Switch on ignition. ♦ Engage reverse gear. ♦ Measure voltage between pin 3 of the sensor plug and ground.	Approx. 8 V ⇒ Step 3	⇒ Step 4
3	Check ground lead of the sensor	♦ Measure voltage between pins 3 and 2 of the sensor plug.	Approx. 8 V ⇒ Step 8	⇒ Step 7

Work instruction			Display OK	If not OK
4	Check sensor supply lead for short circuit to ground	♦ Switch off ignition. ♦ Pull off all sensor plugs. ♦ Pull plug off the control module for ParkAssist. ♦ Measure resistance between plug I pin 5 on the control module for ParkAssist and ground.	∞ Ω ⇒ Step 5	Repair wiring harness. → End
5	Check sensor supply lead for short circuit to B+	♦ Switch on ignition. ♦ Measure voltage between plug I pin 5 on the control module for ParkAssist and ground.	0 V ⇒ Step 6	Repair wiring harness. → End
6	Check supply lead for open circuit	♦ Switch off ignition. ♦ Measure resistance between plug I pin 5 on the control module for ParkAssist and pin 3 of plug on outer right sensor.	< 5 Ω ⇒ Step 12	Repair wiring harness. → End
7	Check ground lead of the sensor for open circuit	♦ Measure resistance between plug I pin 7 on the control module for ParkAssist and pin 2 of plug on outer right sensor.	< 5 Ω ⇒ Step 12	Repair wiring harness. → End
8	Check signal lead of sensor for short circuit to ground	♦ Switch off ignition. ♦ Pull plug off the control module for ParkAssist. ♦ Measure resistance between plug I pin 4 on the control module for ParkAssist and ground. ♦ Measure resistance between plug I pin 4 and pin 7 on the control module for ParkAssist.	∞ Ω ⇒ Step 9	Repair wiring harness. → End
9	Check signal lead of sensor for short circuit to B+	♦ Switch on ignition. ♦ Measure voltage between plug I pin 4 on the control module for ParkAssist and ground.	0 V ⇒ Step 10	Repair wiring harness. → End
10	Check signal lead of the sensor for open circuit	♦ Switch off ignition. ♦ Measure resistance between plug I pin 4 on the control module for ParkAssist and pin 1 of plug on outer right sensor.	< 5 Ω ⇒ Step 11	Repair wiring harness. → End
11	Replace outside sensor on right		→ End	
12	Replace control module for ParkAssist		→ End	

Fault code 2

Inner right sensor faulty

Diagnostic conditions

- Ignition on
- Reverse gear engaged
- Continuous fault tone emitted after engaging reverse gear

Possible cause of fault

- Short circuit to voltage/ground or open circuit in supply leads between the control module and the inside sensor on the right
- Inside sensor on right is faulty
- Control module is faulty

Affected terminals

Terminals I/3, I/5 and I/7

Diagnosis/troubleshooting

Work instruction			**Display OK**	**If not OK**
1	Visual inspection	♦ Check the inside sensor on the right for external damage. ♦ Check the sensor plug for damage and corrosion.	⇒ Step 2	Replace inside sensor on the right or repair sensor plug. → End
2	Check supply voltage of the sensor	♦ Switch off ignition. ♦ Pull plug off the inside sensor on the right. ♦ Switch on ignition. ♦ Engage reverse gear. ♦ Measure voltage between pin 3 of the sensor plug and ground.	Approx. 8 V ⇒ Step 3	⇒ Step 4
3	Check ground lead of the sensor	♦ Measure voltage between pins 3 and 2 of the sensor plug.	Approx. 8 V ⇒ Step 8	⇒ Step 7
4	Check sensor supply lead for short circuit to ground	♦ Switch off ignition. ♦ Pull off all sensor plugs. ♦ Pull plug off the control module for ParkAssist. ♦ Measure resistance between plug I pin 5 on the control module for ParkAssist and ground.	∞ Ω ⇒ Step 5	Repair wiring harness. → End

Work instruction			Display OK	If not OK
5	Check sensor supply lead for short circuit to B+	♦ Switch on ignition. ♦ Measure voltage between plug I pin 5 on the control module for ParkAssist and ground.	0 V ⇒ Step 6	Repair wiring harness. → End
6	Check supply lead for open circuit	♦ Switch off ignition. ♦ Measure resistance between plug I pin 5 on the control module for ParkAssist and pin 3 of plug on inner right sensor.	< 5 Ω ⇒ Step 12	Repair wiring harness. → End
7	Check ground lead of the sensor for open circuit	♦ Measure resistance between plug I pin 7 on the control module for ParkAssist and pin 2 of plug on inner right sensor.	< 5 Ω ⇒ Step 12	Repair wiring harness. → End
8	Check signal lead of sensor for short circuit to ground	♦ Switch off ignition. ♦ Pull plug off the control module for ParkAssist. ♦ Measure resistance between plug I pin 4 on the control module for ParkAssist and ground. ♦ Measure resistance between plug I pin 4 and pin 7 on the control module for ParkAssist.	∞ Ω ⇒ Step 9	Repair wiring harness. → End
9	Check signal lead of sensor for short circuit to B+	♦ Switch on ignition. ♦ Measure voltage between plug I pin 4 on the control module for ParkAssist and ground.	0 V ⇒ Step 10	Repair wiring harness. → End
10	Check signal lead of the sensor for open circuit	♦ Switch off ignition. ♦ Measure resistance between plug I pin 4 on the control module for ParkAssist and pin 1 of plug on inner right sensor.	< 5 Ω ⇒ Step 11	Repair wiring harness. → End
11	Replace inside sensor on right		→ End	
12	Replace control module for ParkAssist		→ End	

Fault code 3

Inner left sensor faulty

Diagnostic conditions

- Ignition on
- Reverse gear engaged

Possible cause of fault

- Short circuit to voltage/ground or open circuit in supply leads between the control module and the inside sensor on the left
- Inside sensor on left is faulty
- Control module is faulty

Affected terminals

Terminals I/2, I/5 and I/7

Diagnosis/troubleshooting

Work instruction			**Display OK**	**If not OK**
1	Visual inspection	♦ Check the inside sensor on the left for external damage. ♦ Check the sensor plug for damage and corrosion.	⇒ Step 2	Replace inside sensor on the left or repair sensor plug. → End
2	Check supply voltage of the sensor	♦ Switch off ignition. ♦ Pull plug off the inside sensor on the left. ♦ Switch on ignition. ♦ Engage reverse gear. ♦ Measure voltage between pin 3 of the sensor plug and ground.	Approx. 8 V ⇒ Step 3	⇒ Step 4
3	Check ground lead of the sensor	♦ Measure voltage between pins 3 and 2 of the sensor plug.	Approx. 8 V ⇒ Step 8	⇒ Step 7
4	Check sensor supply lead for short circuit to ground	♦ Switch off ignition. ♦ Pull off all sensor plugs. ♦ Pull plug off the control module for ParkAssist. ♦ Measure resistance between plug I pin 5 on the control module for ParkAssist and ground.	∞ Ω ⇒ Step 5	Repair wiring harness. → End

Work instruction			Display OK	If not OK
5	Check sensor supply lead for short circuit to B+	♦ Switch on ignition. ♦ Measure voltage between plug I pin 5 on the control module for ParkAssist and ground.	0 V ⇒ Step 6	Repair wiring harness. → End
6	Check supply lead for open circuit	♦ Switch off ignition. ♦ Measure resistance between plug I pin 5 on the control module for ParkAssist and pin 3 of plug on inner left sensor.	< 5 Ω ⇒ Step 12	Repair wiring harness. → End
7	Check ground lead of the sensor for open circuit	♦ Measure resistance between plug I pin 7 on the control module for ParkAssist and pin 2 of plug on inner left sensor.	< 5 Ω ⇒ Step 12	Repair wiring harness. → End
8	Check signal lead of sensor for short circuit to ground	♦ Switch off ignition. ♦ Pull plug off the control module for ParkAssist. ♦ Measure resistance between plug I pin 2 on the control module for ParkAssist and ground. ♦ Measure resistance between plug I pin 4 and pin 7 on the control module for ParkAssist.	∞ Ω ⇒ Step 9	Repair wiring harness. → End
9	Check signal lead of sensor for short circuit to B+	♦ Switch on ignition. ♦ Measure voltage between plug I pin 2 on the control module for ParkAssist and ground.	0 V ⇒ Step 10	Repair wiring harness. → End
10	Check signal lead of the sensor for open circuit	♦ Switch off ignition. ♦ Measure resistance between plug I pin 2 on the control module for ParkAssist and pin 1 of plug on inner left sensor.	< 5 Ω ⇒ Step 11	Repair wiring harness. → End
11	♦ Replace inside sensor on left		→ End	
12	♦ Replace control module for ParkAssist		→ End	

Fault code 4

Outer left sensor faulty

Diagnostic conditions

- Ignition on
- Reverse gear engaged

Possible cause of fault

- Short circuit to voltage/ground or open circuit in the supply leads between the control module and the outside sensor on the left
- Outside sensor on left is faulty
- Control module is faulty

Affected terminals

Terminals I/1, I/5 and I/7

Diagnosis/troubleshooting

Work instruction			**Display OK**	**If not OK**
1	Visual inspection	♦ Check the outside sensor on the left for external damage. ♦ Check the sensor plug for damage and corrosion.	⇒ Step 2	Replace outside sensor on the left or repair sensor plug. → End
2	Check supply voltage of the sensor	♦ Switch off ignition. ♦ Pull plug off the outside sensor on the left. ♦ Switch on ignition. ♦ Engage reverse gear. ♦ Measure voltage between pin 3 of the sensor plug and ground.	Approx. 8 V ⇒ Step 3	⇒ Step 4
3	Check ground lead of the sensor	♦ Measure voltage between pins 3 and 2 of the sensor plug.	Approx. 8 V ⇒ Step 8	⇒ Step 7
4	Check sensor supply lead for short circuit to ground	♦ Switch off ignition. ♦ Pull off all sensor plugs. ♦ Pull plug off the control module for ParkAssist. ♦ Measure resistance between plug I pin 5 on the control module for ParkAssist and ground.	∞ Ω ⇒ Step 5	Repair wiring harness. → End

Work instruction			Display OK	If not OK
5	Check sensor supply lead for short circuit to B+	♦ Switch on ignition. ♦ Measure voltage between plug I pin 5 on the control module for ParkAssist and ground.	0 V ⇒ Step 6	Repair wiring harness. → End
6	Check supply lead for open circuit	♦ Switch off ignition. ♦ Measure resistance between plug I pin 5 on the control module for ParkAssist and pin 3 of plug on the outer left sensor.	< 5 Ω ⇒ Step 12	Repair wiring harness. → End
7	Check ground lead of the sensor for open circuit	♦ Measure resistance between plug I pin 7 on the control module for ParkAssist and pin 2 of plug on the outer left sensor.	< 5 Ω ⇒ Step 12	Repair wiring harness. → End
8	Check signal lead of sensor for short circuit to ground	♦ Switch off ignition. ♦ Pull plug off the control module for ParkAssist. ♦ Measure resistance between plug I pin 4 on the control module for ParkAssist and ground. ♦ Measure resistance between plug I pin 4 and pin 7 on the control module for ParkAssist.	∞ Ω ⇒ Step 9	Repair wiring harness. → End
9	Check signal lead of sensor for short circuit to B+	♦ Switch on ignition. ♦ Measure voltage between plug I pin 1 on the control module for ParkAssist and ground.	0 V ⇒ Step 10	Repair wiring harness. → End
10	Check signal lead of the sensor for open circuit	♦ Switch off ignition. ♦ Measure resistance between plug I pin 1 on the control module for ParkAssist and pin 1 of plug on the outer left sensor.	< 5 Ω ⇒ Step 11	Repair wiring harness. → End
11	♦ Replace outside sensor on left		→ End	
12	♦ Replace control module for ParkAssist		→ End	

Fault code 5

Control unit supply voltage < 9 V or 16.5 V

Diagnostic conditions

- Ignition on
- Reverse gear engaged
- Continuous fault tone emitted after engaging reverse gear

Possible cause of fault

- Low vehicle voltage
- Fault in generator

Affected terminals

Terminals II/10 and II/18

Diagnosis/troubleshooting

Work instruction			**Display OK**	**If not OK**
1	Check supply voltage of control module	♦ Select Control unit supply voltage in the Actual values menu item. ♦ Start the engine. ♦ Engage reverse gear.	Approx. 12 V → End	⇒ Step 2
2	Check the generator	♦ Start the engine. ♦ Measure voltage between both battery terminals.	> 9 V and < 14.5 V ⇒ Step 3	< 9 V or > 12 V: repair generator. → End
3	Check input voltage of the control module	♦ Switch off ignition. ♦ Pull plug II off the control module for ParkAssist. ♦ Switch on ignition. ♦ Measure voltage between plug II pin 18 of the control module for ParkAssist and ground. ♦ Measure voltage at plug II pin 18 and pin 10.	Approx. 12 V ⇒ Step 4	Repair wiring harness. → End
4	♦ Replace control module for ParkAssist		→ End	

Fault code 6

Sensor supply voltage < 6.7 V

Diagnostic conditions

- Ignition on
- Reverse gear engaged
- Continuous fault tone emitted for 0.5 seconds after engaging reverse gear

Possible cause of fault

- Low vehicle voltage
- Short circuit in supply leads to the control module
- Faulty sensor
- Faulty control module

Affected terminals

Terminals I/5 and I/7

Diagnosis/troubleshooting

Work instruction			**Display OK**	**If not OK**
1	Visual inspection	• Check sensors for external damage.	⇒ Step 2	Replace sensor. → End
2	Check supply voltage of the sensors	• Select Sensor supply voltage in the Actual values menu item.	Approx. 8 V → End	⇒ Step 3
3	Check supply lead of the sensors	• Switch off ignition. • Pull off plugs on all sensors. • Engage reverse gear. • Switch on ignition. • Measure voltage on all sensor plugs at pin 3 and ground respectively. • Measure voltage on all sensor plugs at pins 3 and 2 respectively.	Approx. 8 V ⇒ Step 4	⇒ Step 5

Work instruction			Display OK	If not OK
4	Detect faulty sensor	♦ Push on sensor plugs one after the other. ♦ Delete fault memory each time. ♦ Note the sensor for which fault code 6 re-appears. ♦		Replace sensor. → End
5	Check sensor supply lead for short circuit to ground	♦ Switch off ignition. ♦ Pull plug off the control module for ParkAssist. ♦ Measure the resistance between plug I pin 5 and ground. ♦ Measure the resistance between plug I pins 5 and 7.	∞ Ω ⇒ Step 6	Repair wiring harness. → End
6	♦ Replace control module for ParkAssist		→ End	

Fault code 7

Send/receive pulse

Diagnostic conditions

- Ignition on
- Reverse gear engaged
- Continuous fault tone emitted after engaging reverse gear

Possible cause of fault

- Low vehicle voltage
- Faulty control module

Affected terminals

Diagnosis/troubleshooting

Work instruction			**Display OK**	**If not OK**
1	Check vehicle voltage	♦ Examine generator and battery.	⇒ Step 2	Replace generator or battery. → End
2	♦ Replace control module		→ End	

Fault code 8

EPROM data faulty or parameter set not programmed

Diagnostic conditions

- Ignition on
- Reverse gear engaged
- Continuous fault tone emitted for 0.5 seconds after engaging reverse gear

Possible cause of fault

- Control module not coded correctly
- Control module faulty

Affected terminals

Diagnosis/troubleshooting

Work instruction			**Display OK**	**If not OK**
1	Check vehicle coding	♦ Start automatic control unit search. ♦ Check vehicle coding in the 'Modify coding' menu item.	Control module is coded correctly (911 Turbo 996). ⇒ Step 2	Code control module. → End
2	♦ Replace control module		→ End	

Fault code 9

EPROM data faulty or parameter set coded incorrectly

Diagnostic conditions

- Ignition on
- Reverse gear engaged
- Continuous fault tone emitted for 0.5 seconds after engaging reverse gear

Possible cause of fault

- Control module not coded correctly
- Control module faulty

Affected terminals

Diagnosis/troubleshooting

Work instruction			**Display OK**	**If not OK**
1	Check vehicle coding	♦ Start automatic control unit search. ♦ Check vehicle coding in the 'Modify coding' menu item.	Control module is coded correctly (911 Turbo 996). ⇒ Step 3	Code control module. → End
2	♦ Replace control module		→ End	

Fault code XX

Unknown DTC

Diagnostic conditions

- Ignition on
- Reverse gear engaged
- Continuous fault tone emitted after engaging reverse gear

Possible cause of fault

- Corrosion of the ground points

Affected terminals

Diagnosis/Troubleshooting

	Work instruction	Display OK	If not OK
1	Inspect the ground points for corrosion	End	

PCM2/CDR23 (Gateway)

Gateway - introduction

The manual contains the diagnosis for the following system:

PCM2 gateway

General instructions/safety instructions

The following points must be observed during vehicle diagnosis:

- After the battery is connected, volatile memories must be reprogrammed. In the case of radio coding and tuning, the customer must be informed of decoding and the deleted tuner memory.
- After the battery has been connected, the instructions in the assembly ⇒ 9; Rep. Gr. - ; Work instructions after disconnecting the battery must be observed.
- Deactivate the 'automatic traffic announcement' before beginning the diagnosis on the PCM2. If this is not done, the system will crash (applies only to software version < 03).
- When working on the optical waveguide, please observe the instructions in assembly ⇒ 9; Rep. Gr. 9768; Optical waveguide - MOST bus.
- After troubleshooting or repairs, erase the fault memory with the 9588 Porsche System Tester II and carry out a test drive.
- After the test drive, read out the fault memory with the 9588 Porsche System Tester II again.

Danger!

Danger of injury through triggering of driver's airbag

- ***9588 Never hang the Porsche System Tester II over the steering wheel.***

Caution!

Danger of damage due to improper handling of the battery and the control module connectors!

- ***Never disconnect battery with engine running.***

- ***Never start engine without securely connected battery.***
- ***Never pull off or push on plug connections for the control modules or other electronic components when the ignition is switched on.***

General information on the fault memory

Fault code setting conditions

Fault codes can be set in several circumstances, e.g.:

- battery disconnected
- plug connections disconnected
- power failure

In these circumstances, no fault is present in the system and the fault memory must be erased.

Fault memory Info key F8

In order to be able to assess the fault exactly, the fault memory Info key F8 must be pressed. This information should be saved using the Save key F4 and printed out. If a fault code is stored with "not present" status and no other problems are present, then the fault memory must be erased.

Fault type - Frequency counter/Temperature/Voltage; Speed/Time of occurrence.

Vehicle speed	The value indicates the vehicle speed at the time the fault occurred.
Frequency counter	When a fault first occurs, a fault entry is made in the fault memory and the counter is simultaneously set to 50. If a fault is present, the counter is incremented by 1 for each "ignition on". The maximum count is 255. The counter is decremented if the fault is no longer present. The fault memory is automatically erased when the counter reaches 0. If the error occurs again when the counter is between 1 and 49, the counter is reset to 50.
Voltage	The value indicates the voltage at the time the fault occurred.
Temperature:	The value indicates the temperature (temperature sensor in the gateway) at the time the fault occurred. The temperature of the fibre optic transmitter is monitored: max 85°C.
Supply voltage fault type	The display shows which fault type has occurred: ♦ Undervoltage '< 9 V' ♦ Overvoltage ' > 16 V'

Display '*' in the menu 'Control modules' and menu 'PCM2 MOST component check'.

Different required and actual installed components lists

When the 'automatic control module search' is complete, the following display '*' appears in front of the control module description 'PCM2' in the 'Control modules' menu, as well as in the 'PCM2 MMI function selection' in front of the entry 'MOST required installed components list' if the 9588 Porsche System Tester II establishes a difference between the required and actual installed components list and there is no fault code in one of the fault memories of the MOST control modules.

If there is a fault code present in one of the MOST control modules, the display '*' is only shown in the 'PCM2 MMI function selection' in front of the line 'MOST required installed components list'.

If there is a display in the menu Control module, an existing fault code has priority and a '#' is set.

Units

The following selection is available:

- RoW/°C/litre/km.
- UK 0°C/gal/mph.
- USA 0°F/gal/mph.

Vehicle type vehicle coding

The following selection is available:

- Not coded.
- 911 (996).
- 911 Turbo (996).
- Boxster (986).
- Cayenne.
- 987.
- 997.

Vehicle version vehicle coding

The following selection is available:

- Not coded
- Coupe

- Cabrio
- Targa

Right/left-hand drive vehicle coding

The following selection is available:

- Right-hand drive.
- Left-hand drive.

Vehicle hand-over

The PCM2 is converted to delivery mode (low-current mode) in production. As known from other systems (alarm system, instrument cluster, roll-over bar), the PCM2 must be activated with the 9588 Porsche System Tester II.

1. 9588 Connect and start the Porsche System Tester II and switch on the ignition.
2. Select the menu item 'Special functions' and press the [>>] key.
3. Select the menu item 'Vehicle hand-over' and press the [>>] key.
4. Follow the instructions of the 9588 Porsche System Tester II.

Air conditioning

The following versions can be coded:

- Without air conditioning
- With air conditioning

Country-specific tuner settings

The following country-specific tuner settings can be coded:

- Europe.
- North America.
- South America.
- Australia.
- Asia.
- South Africa.
- Japan.

Coding country-specific tuner settings

1. 9588 Connect and start the Porsche System Tester II and switch on the ignition.
2. Select '911 Turbo (996)' in the Vehicle type menu and confirm with the [>>] key.
3. Select 'PCM2' in the control modules selection and confirm with the [>>] key
4. Select 'PCM2 GW' in the control modules selection and confirm with the [>>] key.
5. Select the 'Coding' menu item and press the [>>] key.
6. Select the menu item 'Tuner parameters' and press the [>>] key.
7. Take the country-specific code as it appears in the table, enter it in the form and code with the [F8] key.

MOST switch

The MOST switch is part of the PCM2. If external MOST control units are present, they will only work if the MOST switch is open.

The following settings can be coded:

- MOST switch open.
- MOST switch closed.

Note!

- *When the PCM2 is replaced, the coding must be performed in accordance with the vehicle equipment.*
- *When the 'Switch closed' parameter is set, the switch remains closed even in existing MOST control modules. Communication is then not possible.*

Coding PCM2

1. 9588 Connect and start the Porsche System Tester II and switch on the ignition.
2. Select '911 (996)' in the Vehicle type menu and confirm with the [>>] key.
3. Select 'PCM2' in the control modules selection and confirm with the [>>] key
4. Select 'PCM2 GW' in the control modules selection and confirm with the [>>] key.

5. Select 'Coding' in the PCM2 GW function selection and confirm with the [>>] key.
6. Select 'PCM2 code' in the PCM2 GW coding and confirm with the [>>] key.
7. Take the PCM2 code from 'IPAS', enter it in the form and code with the [F8] key.

Production mode

If the MOST control module is set to Production mode on, it is in low-current mode. The display remains black, the control module cannot function.

1. 9588 Connect and start the Porsche System Tester II and switch on the ignition.
2. Select '911 Turbo (996)' in the Vehicle type menu and confirm with the [>>] key.
3. Select 'PCM2' in the control modules selection and confirm with the [>>] key.
4. Select 'PCM2 GW' in the control modules selection and confirm with the [>>] key.
5. Select 'Coding' in the PCM2 GW function selection and confirm with the [>>] key.
6. Select 'Production mode' in the PCM2 GW coding and confirm with the [>>] key.
7. Select 'Production mode off' menu and code with the [F8] key.

The following options can be coded:

- Production mode off
- Production mode on

Control module replacement - PCM2

The PCM2 is supplied in 'production mode on' in new vehicles and as a spare part. Before putting the PCM2 into operation, the 'Production mode on' must be set to 'Production mode off' in the Coding menu when selecting the function of the PCM2-GW, and the vehicle must be locked and secure. Afterwards, PCM2 is functional. The procedure is explained in detail under 'Production mode'.

Tools - gateway

[illegible]

Danger of injury through triggering of driver's airbag

- ***Never hang the Porsche System Tester II No. 9588 over the steering wheel.***
- ***Always place tools and special tools outside the functioning range of all airbags!***

[illegible]

[illegible]

[illegible]

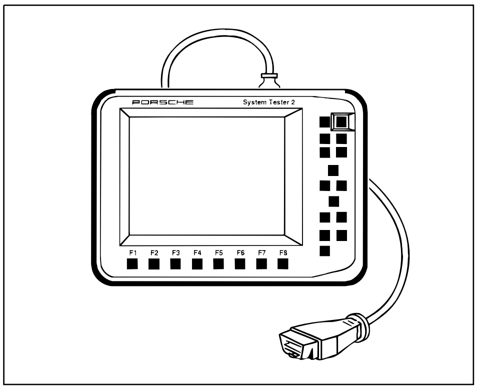

[illegible]

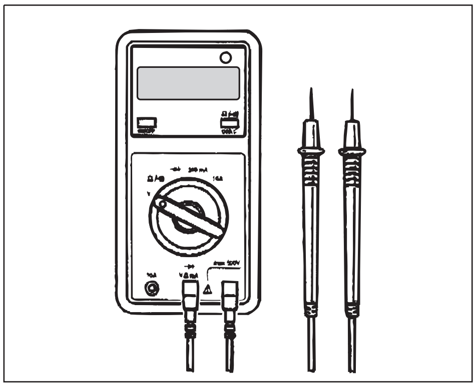

97

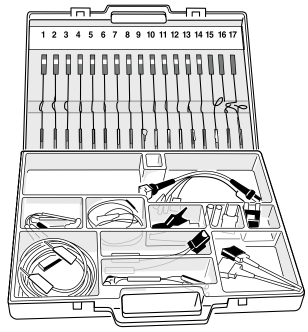

9684 000 721 968 40

03, 97

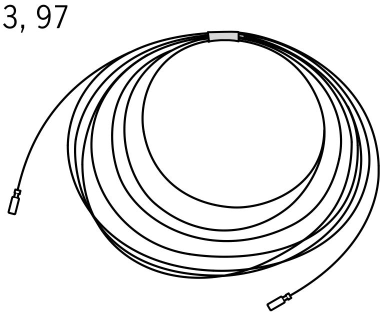

9712 000 721 971 20

Component arrangement - gateway

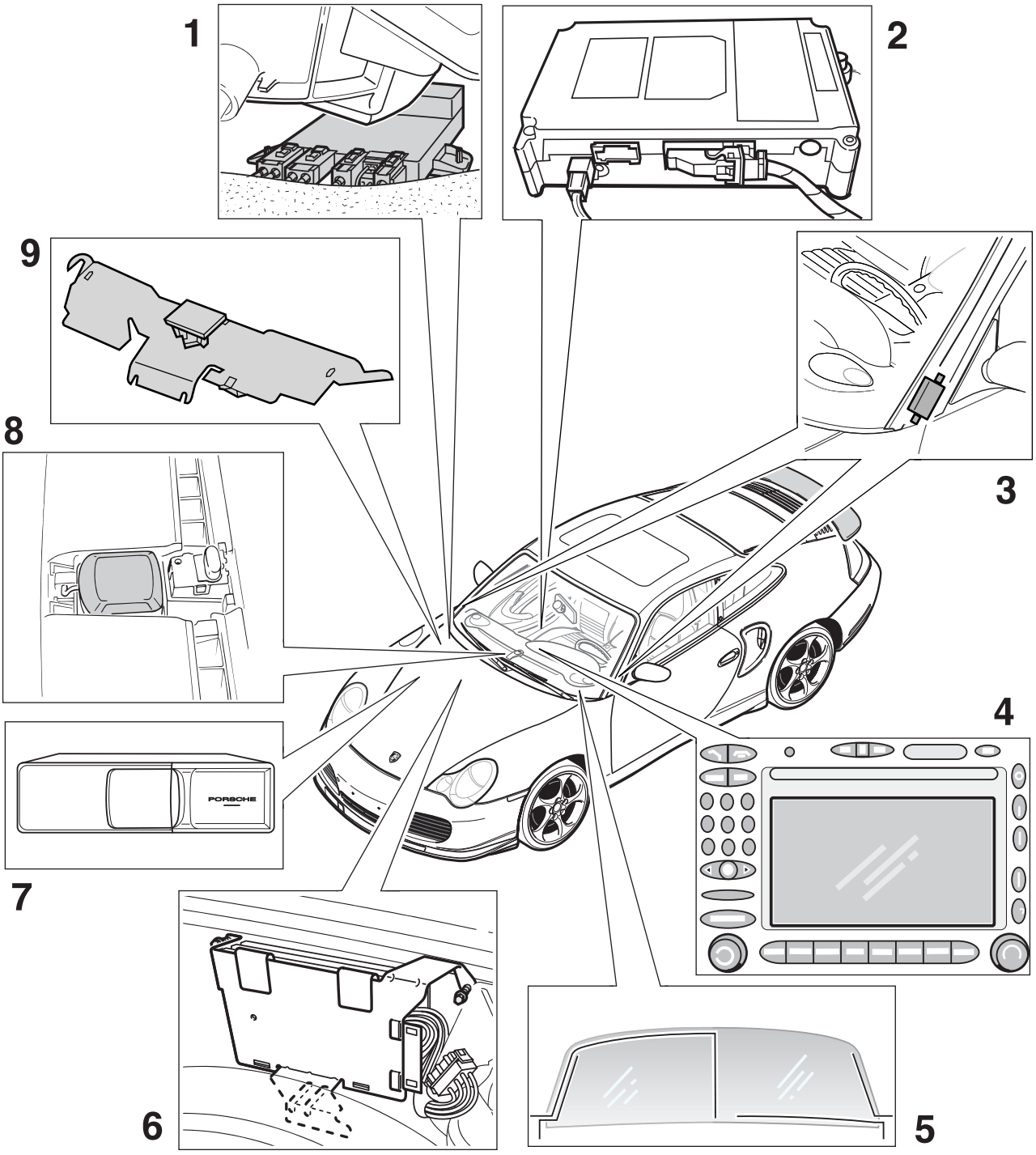

1 - Diversity antenna control unit.

2 - Telephone/telematics control unit

3 - Antenna amplifiers left and right.

4 - PCM2.

5 - Windscreen antenna

6 - External amplifier (option Harman/BOSE).

7 - CD changer

8 - GPS antenna

9 - GSM antenna

Loudspeaker basic system

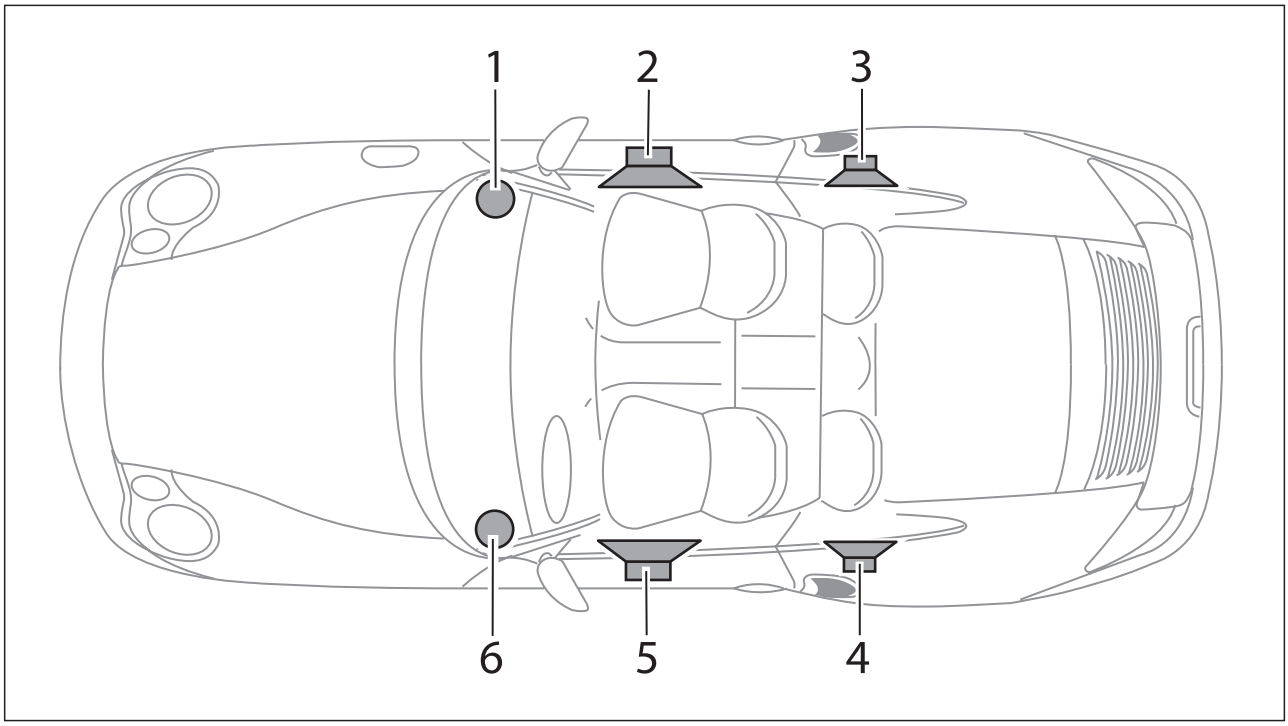

1 - Loudspeaker, front right.

2 - Loudspeaker, door right.

3 - Loudspeaker, rear door right.

4 - Loudspeaker, rear door left.

5 - Loudspeaker, front door left.

6 - Loudspeaker, front left.

Loudspeaker sound package

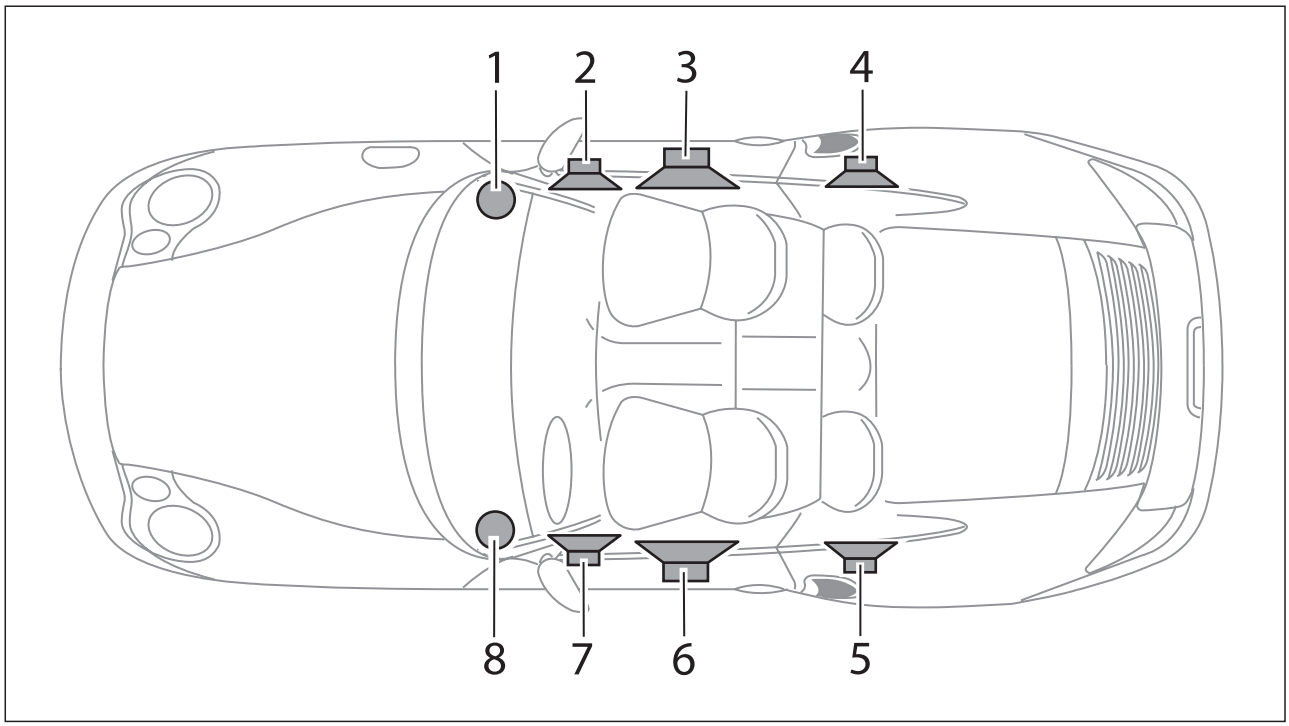

1 - High-pitch loudspeaker, dashboard right.

2 - Middle-pitch loudspeaker, front door right.

3 - Low-pitch loudspeaker, front door right.

4 - Loudspeaker, rear door right.

5 - Loudspeaker, rear door left.

6 - Low-pitch loudspeaker, front door left.

7 - Middle-pitch loudspeaker, front door left.

8 - High-pitch loudspeaker, dashboard left.

High-End loudspeaker

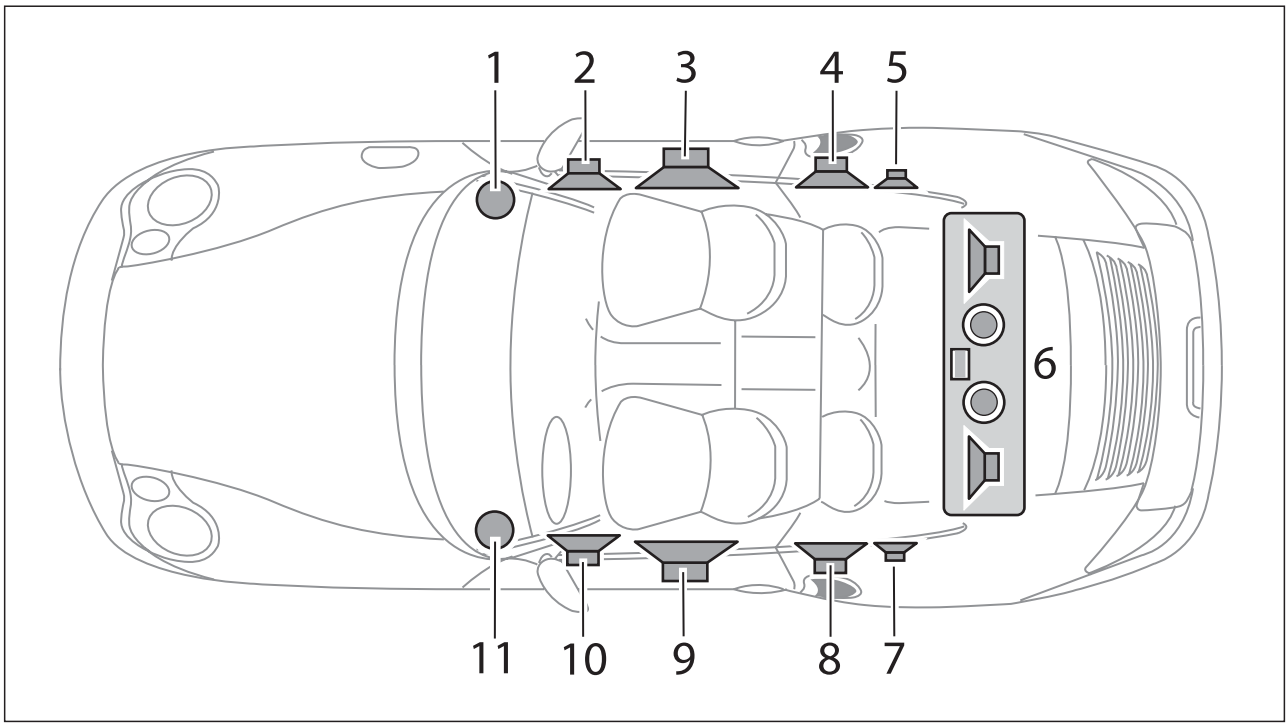

1 - High-pitch loudspeaker, dashboard right.
2 - Middle-pitch loudspeaker, front door right.
3 - Low-pitch loudspeaker, front door right.
4 - Middle-pitch loudspeaker, rear door right.
5 - High-pitch loudspeaker, rear door right.
6 - Subwoofer
7 - High-pitch loudspeaker, rear door left.
8 - Middle-pitch loudspeaker, rear door left.
9 - Low-pitch loudspeaker, door left.
10 - Middle-pitch loudspeaker, door left.
11 - High-pitch loudspeaker, dashboard left.

Connector assignment - gateway

Connector assignment

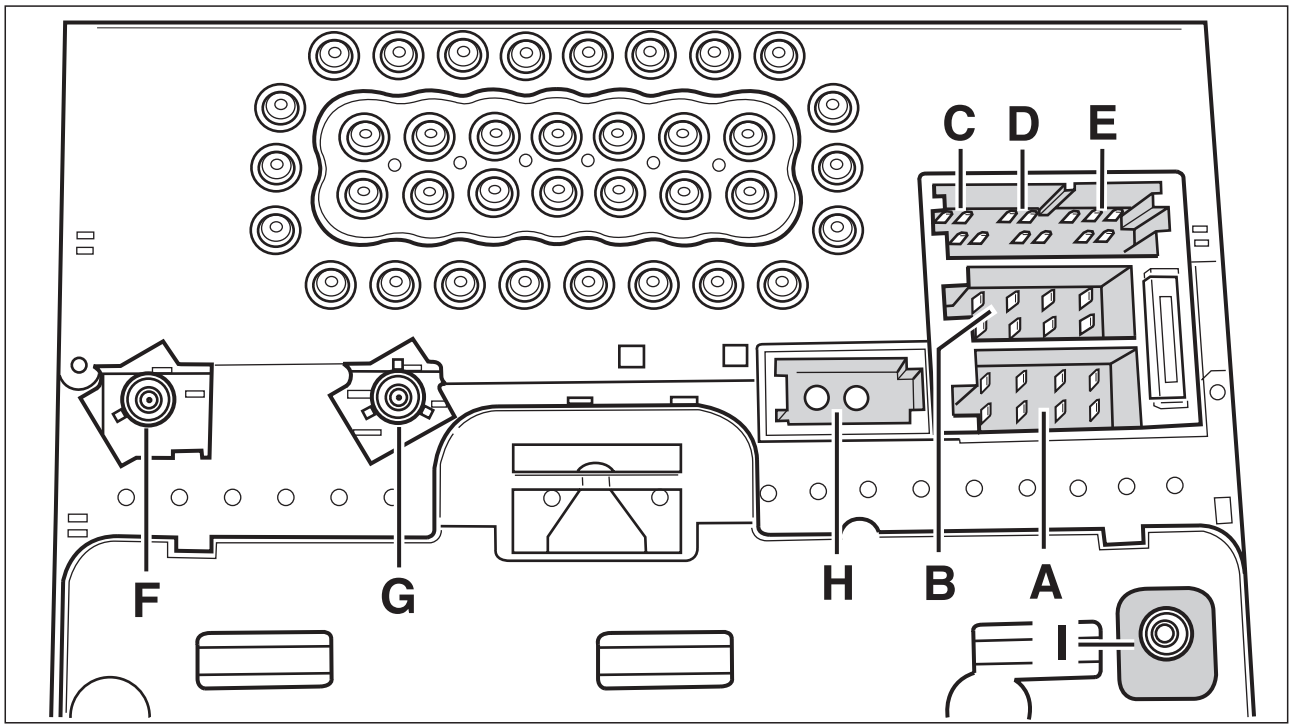

Plug A, black, power supply

Pin	Designation	Pin	Designation
A 1	Not used	A 5	Antenna 12 V +
A 2	Reverse-gear signal	A 6	Not used
A 3	Tel. mute	A 7	Not used
A 4	Pin 30	A 8	Pin 31

Plug B, brown, loudspeaker output

Pin	Designation	Pin	Designation
B1	Loudspeaker RR +	B 5	Loudspeaker FL +
B2	Loudspeaker RR -	B 6	Loudspeaker FL -
B3	Loudspeaker FR +	B 7	Loudspeaker RL +
B4	Loudspeaker FR -	B 8	Loudspeaker RL -

Connector C, yellow, CAN Comfort

Pin	Designation	Pin	Designation
C1	CAN Comfort HIGH	C4	Wake-up/diagnosis
C2	CAN Comfort Low	C5	Not used
C3	Not used	C6	Key code IN

Plug D, green, microphone

Pin	Designation	Pin	Designation
D7	Not used	D10	Not used
D8	Ground microphone	D11	Not used
D9	Microphone 1 +	D12	Not used

Plug E, blue, emergency call

Pin	Designation	Pin	Designation
E13	Emergency call +	E17	Not used
E14	Emergency call -	E18	Not used
E15	Not used	E19	Not used
E16	Not used	E20	Not used

Plug F, antenna

Pin	Designation	Pin	Designation
F1	ZF MVHF socket COD K		

Connector G, diversity antennas

Pin	Designation	Pin	Designation
G1	HF MVHF socket COD A		

Connector H, MOST

Pin	Designation	Pin	Designation
H1	Optical waveguide		
H2	Optical waveguide		

Connector I GPS antenna

Pin	Designation	Pin	Designation
I1	GPS antenna		

Control unit function - gateway

Terminating resistors on the CAN

Terminating resistors are fitted to each end of the wiring to prevent reflection on the wiring. These terminating resistors are integrated into each control module. The interconnection prevents the resistors from being measured with the ohmmeter from the outside.

CAN comfort

Communication between the 9588 Porsche System Tester II and the MOST control modules only takes place via the K lead to the instrument cluster. The data is transferred from the instrument cluster gateway to the MOST control modules, via CAN Comfort to the PCM2 gateway, via the electrical MOST in the PCM2 and via the optical MOST outside of the PCM2.

CD changer (CDC)

The CDC is available as an optional feature and is linked to the PCM2 via the optical waveguide.

Coding table

Coding type	**PCM2 GW**	**PCM2 MMI**	**CDR23**	**Navigation**	**Harman amplifier**	**BOSE amplifier**	**CD changer**	**Telephone**
ABS pulse number				X				
Call automatically accepted		X						
Display format		X		X				
Date		X		X				
Display dimming (background)		X						
Units	X	X		X				
External handset								X
Vehicle type vehicle coding	X	X	X	X	X	X		
Vehicle version vehicle coding	X	X	X	X	X	X		
Right/left-hand drive vehicle coding	X	X	X	X	X	X		

Coding type	PCM2 GW	PCM2 MMI	CDR23	Naviga-tion	Harman ampli-fier	BOSE amplifier	CD changer	Tele-phone
Wheel size				X				
GAL (NLB)		X	X					
Height/width in per cent				X				
Synchronize K-number	X	X		X				
Real K-number	X	X		X				
Air conditioning	X	X		X				
Country coding	X	X		X				
Main set-up menu		X						
MOST switch	X							
MOST required installed compo-nents list		X	X					
Engine version	X*	X*		X*		X*		
PCM2 code		X	X					
Phone status		X						
Porsche Assist-ance, international designation		X						
Porsche Assist-ance, international number		X						
Porsche Assist-ance menu		X						
Porsche Assist-ance, national des-ignation		X						
Porsche Assist-ance, national number		X						
Production mode	X		X					
Tyre width				X				
Tyre condition				X				
Summer/winter time		X		X				
Time-out		X						
Tuner parameters	X		X					
User data			X					

Coding type	PCM2 GW	PCM2 MMI	CDR23	Naviga-tion	Harman ampli-fier	BOSE amplifier	CD changer	Tele-phone
Traffic broadcast loudspeaker boost		X	X					
Time		X		X				
Time zone		X		X				
* Only valid for Cayenne E1								

Coding

It is possible to extract the chassis number and to code the PCM2 on a country-specific basis in the 'Modify coding' menu.

Menu item	Function
♦ PCM2 code	It is possible to code the PCM2 code under this menu item after replacing the PCM2. ♦ 9588 Connect and start the Porsche System Tester II and switch on the ignition. ♦ Select '911 Turbo (996)' in the Vehicle type menu and confirm with the [>>] key. ♦ Select 'PCM2' in the control modules selection and confirm with the [>>] key. ♦ Select 'PCM2 GW' in the PCM2 function selection and confirm with the [>>] key. ♦ Select menu item Coding. ♦ Select menu item "PCM2 code". ♦ Take the PCM2 code from IPAS, enter it and code it with the [F8] key.
♦ Vehicle type vehicle coding	Under this menu item, the PCM2 GW corresponding to the vehicle type can be coded. ♦ 9588 Connect and start the Porsche System Tester II and switch on the ignition. ♦ Select '911 Turbo (996)' in the Vehicle type menu and confirm with the [>>] key. ♦ Select 'PCM2' in the Control module menu and confirm with the [>>] key. ♦ Select 'PCM2 GW' in the 911 Turbo (996) function selection menu and confirm with the [>>] key. ♦ Select 'Coding' in the PCM2 GW function selection menu and confirm with the [>>] key. ♦ Select 'Vehicle type vehicle coding' in the Coding menu and confirm with the [>>] key. ♦ Select "911 Turbo (996)" in the menu and code with the [F8] key.

Menu item	Function
♦ Vehicle version vehicle coding	Under this menu item, the PCM2 GW corresponding to the vehicle version can be coded. ♦ 9588 Connect and start the Porsche System Tester II and switch on the ignition. ♦ Select '911 Turbo (996)' in the Vehicle type menu and confirm with the [>>] key. ♦ Select 'PCM2' in the Control module menu and confirm with the [>>] key. ♦ Select 'Coding' in the 911 Turbo (996) function selection menu and confirm with the [>>] key. ♦ Select "Vehicle version" in the PCM2 coding menu and confirm with the [>>] key. ♦ Select the relevant version "Coupe, Cabrio, Targa" in the menu and code with the [F8] key.
♦ Right/left-hand drive vehicle coding	Under this menu item, the PCM2 GW corresponding to the vehicle version can be coded. ♦ 9588 Connect and start the Porsche System Tester II and switch on the ignition. ♦ Select '911 Turbo (996)' in the Vehicle type menu and confirm with the [>>] key. ♦ Select 'PCM2' in the Control module menu and confirm with the [>>] key. ♦ Select 'Coding' in the 911 Turbo (996) function selection menu and confirm with the [>>] key. ♦ Select "Right/left-hand drive vehicle coding" in the PCM2 GW coding menu and confirm with the [>>] key. ♦ Select 'Right/left-hand drive vehicle coding' in the Modify PCM2 coding menu and confirm with the [>>] key. ♦ Select "Right or left-hand drive" in the menu corresponding to the vehicle equipment and code with the [F8] key.

Menu item	Function
♦ Air conditioning with/without	Under this menu item, the PCM2 GW corresponding to the air conditioning equipment can be coded. ♦ 9588 Connect and start the Porsche System Tester II and switch on the ignition. ♦ Select '911 Turbo (996)' in the Vehicle type menu and confirm with the [>>] key. ♦ Select 'PCM2' in the control modules selection and confirm with the [>>] key. ♦ Select 'PCM2 GW' in the PCM2 function selection and confirm with the [>>] key. ♦ Select 'Coding' in the PCM2 GW menu and confirm with the [>>] key. ♦ Select 'Air conditioning with/without' in the PCM2 GW coding menu and confirm with the [>>] key. ♦ Select "Air conditioning with/without" corresponding to the equipment in the Modify PCM2 GW coding menu item and confirm with the [>>] key. ♦ Select "the relevant country coding" from the menu item that is displayed and code it with the [F8] key.
♦ Tuner parameters	Using this menu item, you can code the tuner parameters (country-specific tuner setting) for the country of registration. ♦ 9588 Connect and start the Porsche System Tester II and switch on the ignition. ♦ Select '911 Turbo (996)' in the Vehicle type menu and confirm with the [>>] key. ♦ Select 'PCM2' in the Control units selection menu and confirm with the [>>] key. ♦ Select 'PCM2 GW' in the 911 Turbo (996) PCM2 function selection menu and confirm with the [>>] key. ♦ Select 'Coding' in the PCM2 GW function selection menu and confirm with the [>>] key. ♦ Select "Tuner parameter" in the PCM2 GW coding menu and confirm with the [>>] key. ♦ Select the 'Country code' corresponding to the country of registration using the [>] key and code with the [F8] key.

Menu item	Function
♦ Units	Using this menu item, you can code the relevant units.

- ♦ 9588 Connect and start the Porsche System Tester II and switch on the ignition.
- ♦ Select '911 Turbo (996)' in the Vehicle type menu and confirm with the [>>] key.
- ♦ Select 'PCM2' in the Control modules menu and confirm with the [>>] key.
- ♦ Select 'PCM2 GW' in the 911 Turbo (996) PCM2 function selection menu and confirm with the [>>] key.
- ♦ Select 'PCM2 GW' in the 911 Turbo (996) function selection menu and confirm with the [>>] key.
- ♦ Select 'Coding' in the PCM2 GW function selection menu and confirm with the [>>] key.
- ♦ Select "Units" in the PCM2 GW coding menu and confirm with the [>>] key.
- ♦ Select "the relevant units" from the menu item that is displayed and code them with the [F8] key.

The following selection is available:

- ♦ Metric, RoW (°C, litre, km)
- ♦ UK English (°C, gallon, mph)
- ♦ US English (°F, gallon, mph)

Menu item	Function
♦ MOST switch	If the PCM2 is operated without additional MOST control modules, the MOST switch must be closed. The MOST switch must only remain open when MOST control modules are connected. Using this menu item, you can code the relevant vehicle version. ♦ 9588 Connect and start the Porsche System Tester II and switch on the ignition. ♦ Select '911 Turbo (996)' in the Vehicle type menu and confirm with the [>>] key. ♦ Select 'PCM2' in the Control modules menu and confirm with the [>>] key. ♦ Select 'PCM2 GW' in the 911 Turbo (996) function selection menu and confirm with the [>>] key. ♦ Select 'Coding' in the PCM2 GW function selection menu and confirm with the [>>] key. ♦ Select "MOST switch open/closed" in the PCM2 GW coding menu and confirm with the [>>] key. ♦ Select 'MOST switch' in the Modify PCM2 GW coding menu and confirm with the [>>] key. ♦ Select "MOST switch open/closed" from the menu item that is displayed and code with the [F8] key. The following selection is available: ♦ Open ♦ Closed
♦ Production mode	The PCM2 is set to the low-power mode in the factory and this must be switched off on putting into service. ♦ 9588 Connect and start the Porsche System Tester II and switch on the ignition. ♦ Select '911 Turbo (996)' in the Vehicle type menu and confirm with the [>>] key. ♦ Select 'PCM2' in the Control modules menu and confirm with the [>>] key. ♦ Select 'PCM2 GW' in the 911 Turbo (996) PCM2 function selection menu and confirm with the [>>] key. ♦ Select 'Coding' in the PCM2 GW function selection and confirm with the [>>] key. ♦ Select 'Production mode' in the PCM2 GW coding menu and confirm with the [>>] key. ♦ Select "Production mode OFF" from the menu item displayed and code it with the [F8] key. The following selection is available: ♦ Production mode on. ♦ Production mode off.

Menu item	Function
♦ Country coding	Using this menu item, you can code the country code. ♦ 9588 Connect and start the Porsche System Tester II and switch on the ignition. ♦ Select '911 Turbo (996)' in the Vehicle type menu and confirm with the [>>] key. ♦ Select 'PCM2' in the control modules selection and confirm with the [>>] key. ♦ Select 'PCM2 GW' in the PCM2 function selection and confirm with the [>>] key. ♦ Select the coding menu item and confirm with the [>>] key. ♦ Select "country coding" in the PCM2 GW coding menu item and confirm with the [>>] key. ♦ Select "the relevant country coding" from the menu item that is displayed and code it with the [F8] key.

Data transfer fault

If faults are detected when the data is decoded, this is known as a data transfer fault. The faults can arise when the data is coded, when the data is transferred through an input level that is optically too low or when the data is decoded. A fault entry is not recorded.

Note!

Using the function 'Reset all coding/transfer counters' all set fault counters of all components can be collectively reset to '0'.

Extended fault memory

Additional data from the PCM2 GW can be read out using this menu item.

- DTC fault symptom, limit value is exceeded or not reached.
- DTC storage state, no fault is detected, not present, present.
- Undervoltage fault type (< 9 volt).
- Overvoltage fault type (> 16 volt).
- Fault type, EEPROM fault.
- Fault type, tuner communication fault
- Fault type, open circuit in distribution line
- Frequency counter
- Temperature
- Voltage
- Vehicle speed

1. 9588 Connect and start the Porsche System Tester II and switch on the ignition.
2. Select '911 Turbo (996)' in the Vehicle type menu and confirm with the [>>] key.
3. Select 'PCM2' in the control modules selection and confirm with the [>>] key.
4. Select 'PCM2 GW' in the 911 Turbo (996) PCM2 function selection and confirm with the [>>] key.
5. Select the "Identification" menu item and press the [>>] key.
6. "Diagnosis software number; PCM2 part number" appear on the display.
7. 'Extended identification' can be called up with the [F8] key.

Note!

Deactivate the 'automatic traffic announcement' before performing the diagnosis on the PCM2. If this is not done, the diagnosis will abort (applies only to version numbers < 03).

Extended identification

The following data from the PCM2 GW can be read out using this menu item:

- CRIN (Car Radio Identification Number).
- VIN (Vehicle Identification Number).
- Part number.
- System Supplier ECU Hardware Number (cw, year).
- System Supplier ECU Hardware Version Number.
- System Supplier ECU Software Number (cw, year).
- System Supplier ECU Software Version Number.
- Porsche workshop number.
- Diagnosis software number.
- Date ECU manufacturing (YYYY.MM.DD).

1. 9588 Connect and start the Porsche System Tester II and switch on the ignition.
2. Select '911 Turbo (996)' in the Vehicle type menu and confirm with the [>>] key.

3. Select 'PCM2' in the control modules selection and confirm with the [>>] key.
4. Select 'PCM2 GW' in the 911 Turbo (996) PCM2 function selection and confirm with the [>>] key.
5. Select the menu item"Identification" and confirm with the [>>] key.
6. "Diagnosis software number; PCM2 part number" appear on the display.
7. 'Extended identification' can be called up with the [F8] key.

Note!

Deactivate the 'automatic traffic announcement' before performing the diagnosis on the PCM2. If this is not done, the diagnosis will abort (applies only to version numbers < 03).

Function of the components

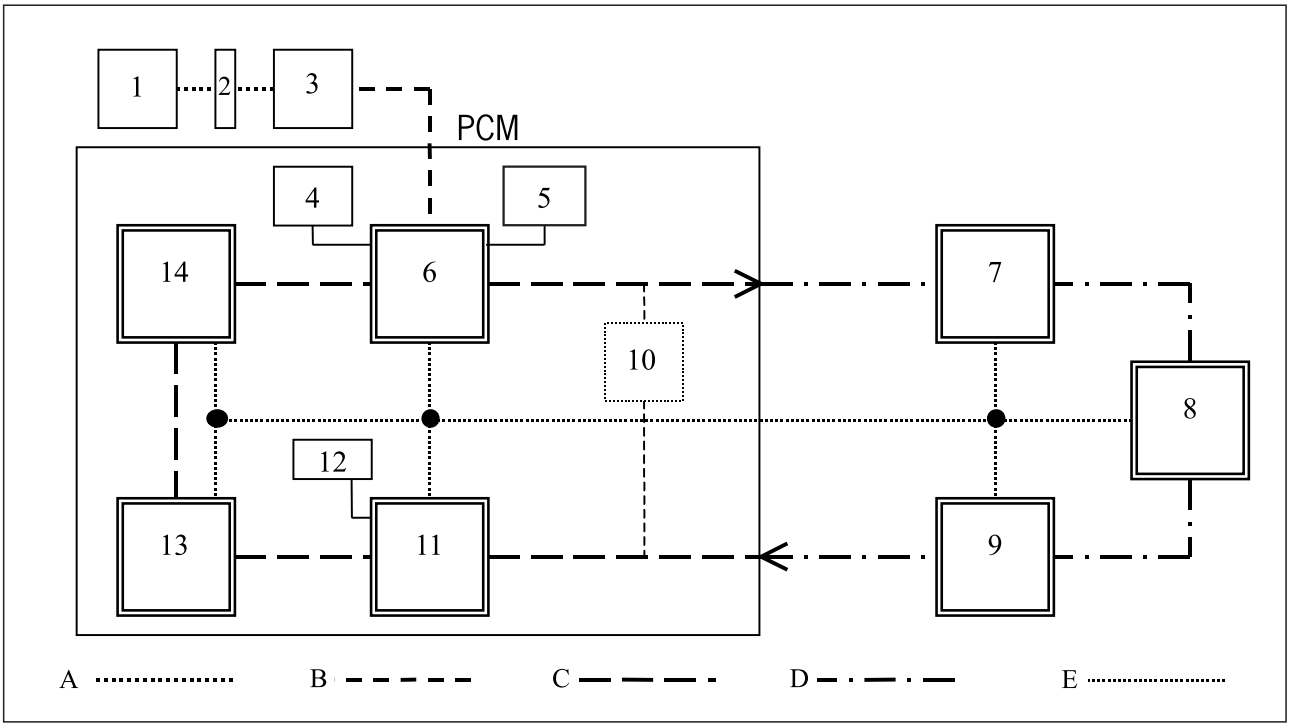

A - K lead
B - CAN comfort
C - Electrical MOST (internal)
D - Optical MOST (external)
E - MOST diagnosis lead
1 - 9588 Porsche System Tester II
2 - Diagnostic box
3 - Instrument cluster (gateway)
4 - PCM2 (internal amplifier)
5 - PCM2 (tuner)
6 - PCM2 (gateway) (MOST nodes)
7 - External amplifier (MOST nodes)
8 - CDC (CD changer) (MOST nodes)
9 - Telephone/telematics (MOST nodes)
10 - PCM2 (MOST switch)
11 - MMI (Man Machine Interface) (MOST nodes)
12 - PCM2 single CD
13 - Navigation (MOST nodes)
14 - VOCS (voice control system) (MOST nodes)

Gateway

The gateway is integrated in the PCM2. Together with the MMI, it is a fixed component of each PCM2. It provides a connection to CAN Comfort via its nodes. Diagnostic and useful data is exchanged with the CAN via these nodes.

It creates links to the following systems:

- CAN Comfort
- Media Oriented Systems Transport (MOST), internal (electrical)
- Voice control system (VOCS) (optional/insertion)
- Navigation (optional/insertion).
- Man Machine Interface (MMI)
- Single CD.
- Media Oriented Systems Transport (MOST), external bus (optical)
- Amplifier optional (Harman or BOSE)
- CD changer.
- Telephone/telematics.

Identification

The diagnosis software number and the part numbers for the PCM2 can be read out under this menu item.

1. 9588 Connect and start the Porsche System Tester II and switch on the ignition.
2. Select '911 Turbo (996)' in the Vehicle type menu and confirm with the [>>] key.
3. Select 'PCM2' in the control modules selection and confirm with the [>>] key.
4. Select 'PCM2 GW' in the PCM2 function selection and confirm with the [>>] key.
5. Select the menu item"Identification" and confirm with the [>>] key.
6. "Diagnosis software number; PCM2 part number" appear on the display.

Note!

Deactivate the 'automatic traffic announcement' before performing the diagnosis on the PCM2. If this is not done, the diagnosis will abort (applies only to version numbers < 03).

Actual values

Under the 'Actual values' menu item, the supply voltage and the MOST unlock counter can be read out.

Note!

Using the function 'Reset all coding/transfer counters' all set fault counters of all components can be collectively reset to '0'.

Menu item	Function
♦ MOST unlock counter	Under this menu item, it is possible to check the electrical and optical MOST during troubleshooting. The MOST unlock counter counts all recognized unlocks (connection operation) and outputs these as the lawn. ♦ 9588 Connect and start the Porsche System Tester II and switch on the ignition. ♦ Select '911 Turbo (996)' in the Vehicle type menu and confirm with the [>>] key. ♦ Select 'PCM2' in the control modules selection and confirm with the [>>] key. ♦ Select 'PCM2 GW' in the PCM2 function selection and confirm with the [>>] key. ♦ Select 'Actual values' in the menu item and confirm with the [>>] key. ♦ Select the "Unlock counter" menu item using the [>] key and confirm with the [>>] key. ♦ Read out values from the display field.
♦ Supply voltage	Under this menu item, it is possible to check the supply voltage during troubleshooting. ♦ 9588 Connect and start the Porsche System Tester II and switch on the ignition. ♦ Select '911 Turbo (996)' in the Vehicle type menu and confirm with the [>>] key. ♦ Select 'PCM2' in the control modules selection and confirm with the [>>] key. ♦ Select 'PCM2 GW' in the 911 Turbo (996) PCM2 function selection and confirm with the [>>] key. ♦ Select 'Actual values' in the menu item and confirm with the [>>] key. ♦ Select the "Supply voltage" menu item using the [>] key and confirm with the [>>] key. ♦ Read out values from the display field.

Man Machine Interface (MMI)

The MMI is part of the PCM2 (on the mainboard). It carries out the diagnostics of the ring break diagnosis line (stub cable) and the diagnostics of the optical distribution line.

MOST actual and required installed components lists

All MOST control modules that are connected to the PCM2 are entered via diagnostic tester in the 'required installed components list'. Only the MOST control modules recorded in the MOST required installed components list are activated. An 'actual installed components list' of detected devices is written and saved when the PCM2 is started.

MOST component check

Note!

When there is a customer complaint or identifiable problems but no fault code entries, firstly the 'MOST component check' is to be selected in the PCM2 function selection menu and then the 'MOST system check' is to be carried out.

The MOST component check can be reached via the menu PCM2 function selection. This comprises a summary of the following check processes:

- Data transmission check.
- MOST system check (with engine running).
- Ring break diagnosis (with engine running).

The MOST components check 'MOST system check' is to be carried out when the display indicates 'unavailable MOST control modules'. If no fault code is stored, the '*' symbol indicates a 'varying required and actual installed components list' in the Control modules menu in front of the 'PCM2' system and in the 'PCM2 MMI function selection' in front of the selection 'MOST required installed components list'. A comparison of these two lists can determine faulty components.

Data transmission check

Note!

Using the function 'Reset all coding/transfer counters' all set fault counters of all components can be collectively reset to '0'.

Menu item	Function
♦ Data transmission check	Using this menu item, the quality of the data transmission can be assessed. This is a counter which leads to an increase in the value if faults occur within a certain time period. The check is carried out continuously at predetermined intervals. ♦ 9588 Connect and start the Porsche System Tester II and switch on the ignition. ♦ Select '911 Turbo (996)' in the Vehicle type menu and confirm with the [>>] key. ♦ Select 'PCM2' in the Control modules menu and confirm with the [>>] key. ♦ Select 'MOST components check' in the PCM2 function selection and confirm with the [>>] key. ♦ Select "Data transmission check" in the 911 Turbo (996) PCM2 MOST components check function selection and confirm with the [>>] key.

MOST system check (with engine running)

Menu item	Function
♦ MOST system check (with engine running).	Using this menu item, a MOST system check can be carried out with the ignition on. The following checks are carried out automatically and their results are displayed. ♦ Gateway start-up condition is read out. ♦ MOST installed components list (required and actual installed components list) is analysed. ♦ Ring line diagnosis. ♦ 9588 Connect and start the Porsche System Tester II and switch on the ignition. ♦ Select '911 Turbo (996)' in the Vehicle type menu and confirm with the [>>] key. ♦ Select 'PCM2' in the Control modules menu and confirm with the [>>] key. ♦ Select 'MOST components check' in the PCM2 function selection and confirm with the [>>] key. ♦ Select "MOST system check" in the 911 Turbo (996) PCM2 MOST components check function selection and confirm with the [>>] key. ♦ Follow the Tester instructions. Whenever there are several ring breaks, the 1st ring break is displayed in the following order: ♦ PCM2 Gateway > external amplifier. ♦ External amplifier > CD changer. ♦ CD changer > telephone. ♦ Telephone > PCM2 MMI. is displayed. Then the check is terminated. ♦ Start the optical performance check.

Ring break diagnosis (with engine running)

Menu item	Function
♦ Ring break diagnosis (with engine running).	Using this menu item, a ring break diagnosis can be carried out (with the engine running). ♦ 9588 Connect and start the Porsche System Tester II and switch on the ignition. ♦ Select '911 Turbo (996)' in the Vehicle type menu and confirm with the [>>] key. ♦ Select 'PCM2' in the Control modules menu and confirm with the [>>] key. ♦ Select 'MOST components check' in the PCM2 function selection and confirm with the [>>] key. ♦ Select "Ring break diagnosis (when the engine is running)" in the 911 Turbo (996) PCM2-GW MOST components check function selection and confirm with the [>>] key.

MOST lock/unlock

A lock occurs when the signal sent from the MMI via the MOST optical/electrical is understood and answered by the connected MOST control modules. This applies a correct optical MOST signal. The lock is maintained until the signal is no longer detectable for a longer period of time (several µseconds) 'unlock'.

Note!

Using the function 'Reset all coding/transfer counters' all set fault counters of all components can be collectively reset to '0'.

MOST - optical/electrical

MOST signals are transferred electrically within the PCM2 and optically outside of the PCM2. Internally, the PCM2 consists of at least 2 nodes (GW and MMI), which are installed in the device and can also be expanded to four nodes by adding the navigation and VOCS nodes.

The data is transferred outside of the PCM2 via the optical waveguide, which creates a connection to the nodes in the external MOST control modules such as external amplifiers, CD changers, and/or telephone/telematics (depending on the equipment). The gateway node represents the connection to CAN Comfort.

MOST switch

The MOST - switch - switch is part of the PCM2. It keeps the electrical MOST closed if no other MOST control unit is optically connected to the MOST. The MOST switch is opened when a light signal is received from the connected MOST control modules.

The following settings can be coded:

- MOST switch open.
- MOST switch closed.

Note!

- *When the PCM2 is replaced, the coding must be performed in accordance with the connected MOST control modules.*
- *When the 'Switch closed' parameter is set, the switch remains closed even in existing MOST control modules. Communication is then not possible.*

Navigation

The navigation module is designed as a module box, which can be inserted in the PCM2 as an option. After the insertion, an electronic switch is opened automatically and the module is integrated into the MOST ring.

Ring break diagnosis line

The ring break diagnosis line is an electrical lead, which, as a stub cable, connects the individual MOST control modules in the system with one another. The existing MOST control modules are checked at regular intervals during communication with the control modules via the electrical/optical MOST.

Input signals

The following queries can be run using this menu item:

- Registry startup status
- Internal ring startup status
- External ring startup status

Note!

Deactivate the 'automatic traffic announcement' before performing the diagnosis on the PCM2. If this is not done, the diagnosis will abort (applies only to version numbers < 03).

Menu item	Function
♦ Registry startup status	It is displayed under this menu item that installed MOST control modules can be read out from the actual installed components list. ♦ 9588 Connect and start the Porsche System Tester II and switch on the ignition. ♦ Select '911 Turbo (996)' in the Vehicle type menu and confirm with the [>>] key. ♦ Select 'PCM2' in the Control modules menu and confirm with the [>>] key. ♦ Select 'PCM2 GW' in the PCM2 function selection and confirm with the [>>] key. ♦ Select 'Input signals' in the PCM2 GW function selection and confirm with the [>>] key. ♦ Select "Startup status registry" in the PCM2 GW input signals function selection and confirm with the [>>] key. ♦ Read out values from the display field.
♦ Internal ring startup status	Under this menu item, the internal ring startup status can be read out during troubleshooting. ♦ 9588 Connect and start the Porsche System Tester II and switch on the ignition. ♦ Select '911 Turbo (996)' in the Vehicle type menu and confirm with the [>>] key. ♦ Select 'PCM2' in the Control modules menu and confirm with the [>>] key. ♦ Select 'PCM2 GW' in the PCM2 function selection and confirm with the [>>] key. ♦ Select 'Input signals' in the PCM2 GW function selection and confirm with the [>>] key. ♦ Select "Startup status" in the PCM2 GW input signals function selection and confirm with the [>>] key. ♦ Read out values from the display field. ♦ 'Internal ring startup status' internal MOST (electrical) is functional.

Menu item	Function
♦ External ring startup status	Under this menu item, the external ring startup status can be read out during troubleshooting. ♦ 9588 Connect and start the Porsche System Tester II and switch on the ignition. ♦ Select '911 Turbo (996)' in the Vehicle type menu and confirm with the [>>] key. ♦ Select 'PCM2' in the Control modules menu and confirm with the [>>] key. ♦ Select 'PCM2 GW' in the PCM2 function selection and confirm with the [>>] key. ♦ Select 'Input signals' in the PCM2 GW function selection and confirm with the [>>] key. ♦ Select "Startup status" in the PCM2 GW input signals function selection and confirm with the [>>] key. ♦ Read out values from the display field. ♦ 'External ring startup status' internal MOST (electrical) is functional. ♦ 'External ring startup status' external MOST (optical) is functional.

Single CD

The CD changer is part of the PCM2. It is used to update the navigation system.

Voice control system (VOCS)

The VOCS is designed as a module box which can be pushed into the PCM2 (optional). After the insertion, an electronic switch is opened and the module is integrated into the MOST ring.

PCM2 control module (head unit)

The PCM2 control unit (head unit) includes the following components:

Internal:

PCM2 gateway.

PCM2 Man Machine Interface (MMI).

Internal amplifier (optional, depending on the equipment).

Tuner.

Single CD.

Navigation (optional/insertion).

VOCS (voice control system) (optional/insertion).

Controller Area Network (CAN) Comfort.

MOST switch.

External:

External amplifier (optional, Harman or BOSE).

CD changer (CDC), (optional).

Telephone/telematics (optional).

The PCM2 consists of at least two but a maximum of four MOST nodes, (Gateway, MMI and Navigation and VOCS (optional)), which communicate with each other electronically via the MOST. Data is transferred outside of the PCM2 via the optical MOST.

Drive links

Drive links of the PCM2 can be activated with this menu item. This allows the function of the drive links to be assessed very quickly.

The following drive links can be activated with the 9588 Porsche System Tester II:

- Left balance.
- Central balance.
- Right balance.
- Bass - minimum value.
- Bass - centre position.
- Bass - maximum value.
- Front fader.
- Middle fader.
- Rear fader.
- MOST power reduction - start.
- MOST switch closed.
- MOST switch open.
- Mute off.
- Mute on.
- MOST bus switch on.
- MOST bus switch off.
- Output switch on.
- Output switch off.
- Treble - minimum value.
- Treble - centre position.

- Treble - maximum value.
- Volume - minimum value.
- Volume - centre position.
- Volume - maximum value.

Note!

The activated drive link is automatically switched off after approximately 20 seconds.

The subsequent note does not apply to the following:

- MOST bus switch
- MOST power reduction

Telephone/telematics

The telephone/telematics feature is available as an option and is linked to the PCM2 via the optical waveguide.

Tuner

The tuner is part of the PCM2 (on the main board).

External amplifier

The external amplifier (Harman or BOSE) is available as an optional feature and is linked to the PCM2 via the optical waveguide.

Internal amplifier

The internal amplifier is part of the PCM2 (installed on the main board).

Wake-up function

In an idle state, all control modules that are connected to the MOST are in sleep mode. When the PCM2 is switched on, a light is switched on via the MMI. It is reinforced and passed on by the MOST control modules that are connected.

Fault overview - gateway

Fault code	Fault text	Fault effect
8001	Supply voltage	Failure
8002	Control unit faulty	Failure
8004	CAN comfort bus OFF	Can only be operated under certain conditions
8005	CAN comfort timeout, instrument cluster	Can only be operated under certain conditions
800A	CAN comfort timeout, air-conditioning system	Can only be operated under certain conditions
800B	CAN comfort signal fault, instrument cluster	Can only be operated under certain conditions

8001 PCM2 - Gateway

Supply voltage

Diagnostic conditions

- Engine running

!

The fault memory status (present/not present) is always updated when the motor is started.

Possible cause of fault

- Battery voltage too low '< 9 V for > 30 sec.'
- Battery voltage too high '> 16 V for > 30 sec.'
- Fuse faulty
- Battery faulty
- Generator regulator faulty
- Generator faulty

Affected pins

PCM2 plug A, Pin 4, Pin 8

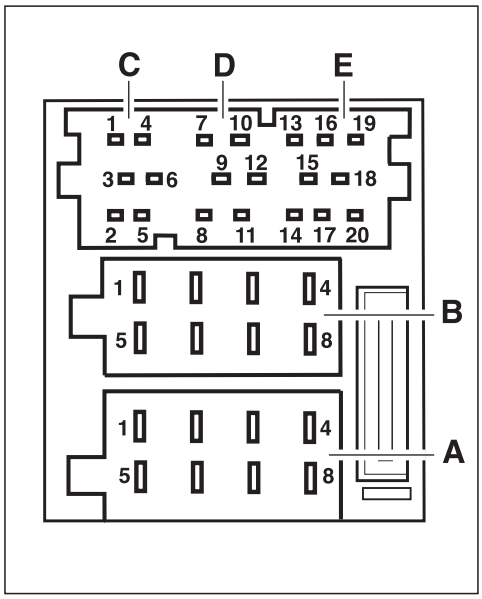

Battery voltage too low

Diagnosis/troubleshooting

Work instruction			Display OK	If not OK
1	Checking battery	♦ Examine battery.	⇒ Step 2	Charge or replace battery. → End
2	Checking fuse	♦ Check fuse D 8 to the PCM2.	⇒ Step 3	Replace fuse. → End
3	Checking supply voltage pin 30	♦ Switch off ignition. ♦ Remove plug A from PCM2. ♦ Switch on ignition. ♦ Measure voltage on plug A on PCM2 between pin 4 and ground. ♦ Switch on ignition.	Battery voltage. ⇒ Step 4	Corrosion in the plug connection or contact resistance in the supply lead. Check and repair wiring harness. → End
4	Checking ground lead	♦ Switch off ignition. ♦ Measure resistance on plug A on PCM2 between pin 8 and ground.	< 5 Ω ⇒ Step 5	Check ground point or corrosion in plug connection or contact resistance in the supply lead. Check and repair wiring harness. → End
5	Replacing PCM2		→ End	

Battery voltage too high

Diagnosis/troubleshooting

Work instruction			Display OK	If not OK
1	Checking supply voltage pin 30	♦ Switch off ignition. ♦ Remove plug A from PCM2. ♦ Switch on ignition. ♦ Start engine and let it run at > 2,000 rpm. ♦ Measure voltage on plug A on PCM2 between pin 4 and ground.	Battery voltage 11.4 to 14.5 V. ⇒ Step 2	Wiring/regulator or diodes faulty. Repair wires or generator. → End

2	Deleting fault memory, reading out again.	♦ Switch ignition off and remove ignition key. ♦ Switch ignition on again, conduct test drive. ♦ Read out fault code again after conducting test drive.	→ End	⇒ Step 3
3	Replacing PCM2		→ End	

8002 PCM2 - gateway

Control module faulty (PCM2)

Diagnostic conditions

- Ignition on
- PCM2 on

Possible cause of fault

- EEPROM fault

Note!

-
-
-
-
-

Affected pin

-

Diagnosis/troubleshooting on the PCM2

Work instruction			Display OK	If not OK
1	Read out PCM2 fault memory	♦ Connect the Porsche System Tester II No. 9588 to the diagnostic socket, start it and switch on the ignition ♦ Select '911 Turbo (996)' in the Vehicle type menu and confirm with the [>>] key ♦ Select 'PCM' in the control modules selection and confirm with the [>>] key ♦ Select 'PCM2/CDR23' in the control modules selection and confirm with the [>>] key ♦ Select 'PCM2 GW' in the PCM2 function selection and confirm with the [>>] key ♦ Start 'Fault memory' in the menu using the [>>] key ♦ Reading out fault memory ♦ Erase fault memory ♦ Remove ignition key and switch on ignition again ♦ Reading out fault memory ♦ Extract ambient data, press the [>>] key	The fault is remedied → End	Fault code is still displayed ⇒ Step 2
2	Replace PCM2		The fault is remedied → End	

8004 PCM2 - gateway

CAN comfort bus OFF

Diagnostic conditions

- Ignition on
- PCM2 on

Possible cause of fault

- CAN comfort (high) - short circuit to ground/B+
- CAN comfort (low) - short circuit to ground/B+

Note!

-
-
-
-
-

Affected pin

PCM2 control module, plug E, yellow, pins 1 and 2

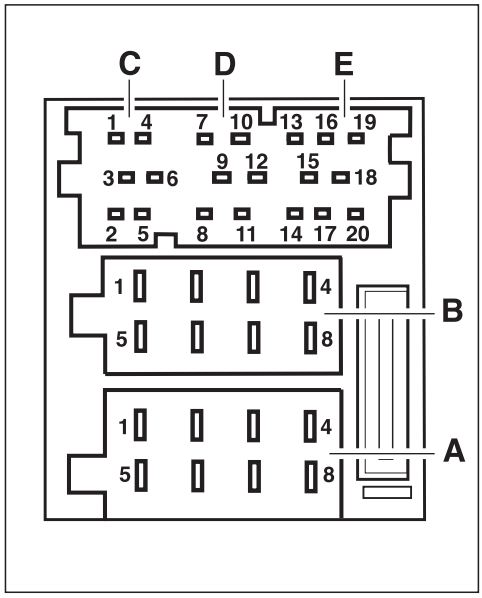

Diagnosis/troubleshooting

Work instruction			Display OK	If not OK
1	Read out PCM2 fault memory	♦ Connect the Porsche System Tester II No. 9588 to the diagnostic socket, start it and switch on the ignition ♦ Select '911 Turbo (996)' in the Vehicle type menu and confirm with the [>>] key ♦ Select 'PCM' in the control modules selection and confirm with the [>>] key ♦ Select 'PCM2/CDR23' in the control modules selection and confirm with the [>>] key ♦ Select 'PCM2 GW' in the PCM2 function selection and confirm with the [>>] key ♦ Start 'Fault memory' in the menu using the [>>] key ♦ Reading out fault memory ♦ Erase fault memory ♦ Remove ignition key and switch on ignition again ♦ Reading out fault memory ♦ Extract ambient data, press the [>>] key	→ End	Fault code is displayed ⇒ Step 2
2	Check CAN bus leads, CAN-high and CAN-low for short circuit	♦ Switch off ignition ♦ Pull off plug E on the PCM2 ♦ Pull off plug on instrument cluster ♦ Pull off plug on Climatronic ♦ Measure resistance on plug E of PCM2 between pins 1 and 2	∞ Ω ⇒ Step 3	Repair short circuit in wiring harness between high and low → End
3	Check CAN comfort (high) for short circuit to ground	♦ Measure resistance on plug E of PCM2 between pin 1 and ground	∞ Ω ⇒ Step 4	Repair short circuit between CAN comfort (high) and ground → End
4	Check CAN comfort (low) for short circuit to ground	♦ Measure resistance on plug E of PCM2 between pin 2 and ground	∞ Ω ⇒ Step 5	Repair short circuit between CAN comfort (low) and ground → End

Work instruction			**Display OK**	**If not OK**
5	Check short circuit between CAN Comfort (high) and battery positive connection	♦ Measure voltage on plug E of PCM2 between pin 1 and ground ♦ Switch ignition on	< 0 V ⇒ Step 6	Repair short circuit between CAN comfort (high) and voltage supply line → End
6	Check for short circuit between CAN comfort (low) and battery positive connection	♦ Measure voltage on plug E of PCM2 between pin 2 and ground ♦ Switch ignition on	< 0 V ⇒ Step 7	Repair short circuit between CAN comfort (low) and voltage supply line → End
7	Determine faulty control unit	♦ Switch off ignition ♦ Reconnect all plugs to control units ♦ Pull off plugs to the control modules (except PCM2) individually and read out the fault memory of the PCM2 and check whether the fault has been remedied	The fault is remedied by disconnecting the plug connection of a control module ⇒ Step 8	⇒ Step 9
8	♦ Replace the control module which was last disconnected from the CAN bus		→ End	
9	Replace PCM2		→ End	

8005 PCM2 - gateway

CAN comfort timeout, instrument cluster

Diagnostic conditions

- Ignition on
- PCM2 on

Possible cause of fault

- CAN comfort (high) - open circuit
- CAN comfort (low) - open circuit

Note!

-
-
-
-
-

Affected pin

PCM2 control module, plug E, pins 1 and 2

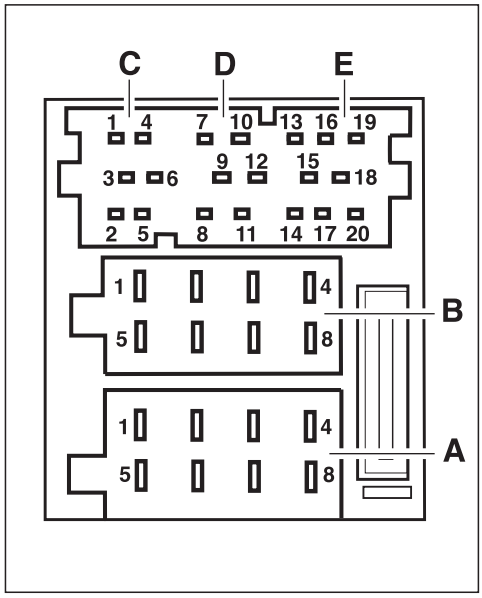

Diagnosis/troubleshooting

Work instruction			Display OK	If not OK
1	Read out PCM2 fault memory	♦ Connect the Porsche System Tester II No. 9588 to the diagnostic socket, start it and switch on the ignition ♦ Select '911 Turbo (996)' in the Vehicle type menu and confirm with the [>>] key ♦ Select 'PCM' in the control modules selection and confirm with the [>>] key ♦ Select 'PCM2/CDR23' in the control modules selection and confirm with the [>>] key ♦ Select 'PCM2 GW' in the PCM2 function selection and confirm with the [>>] key ♦ Start 'Fault memory' in the menu using the [>>] key ♦ Reading out fault memory ♦ Erase fault memory ♦ Remove ignition key and switch on ignition again ♦ Reading out fault memory ♦ Extract ambient data, press the [>>] key	The fault is remedied → End	⇒ Step 2
2	Check CAN comfort (high) for open circuit	♦ Switch off ignition ♦ Pull off plug E on the PCM2 ♦ Pull off plug A on the instrument cluster control module ♦ Pull off plug B on the air-conditioning system control module ♦ Measure specific resistance between pin 1 of plug E on the PCM2 control module and pin 14 of plug A on the instrument cluster control module	< 0.5 Ω ⇒ Step 3	Repair open circuit in wiring harness → End
3	Check CAN comfort (low) for open circuit	♦ Measure specific resistance between pin 2 of plug E on the PCM2 control module and pin 15 of plug A on the instrument cluster control module	< 0.5 Ω ⇒ Step 4	Repair open circuit in wiring harness → End
4	♦ Replace PCM2		→ End	

800A PCM2 - gateway

CAN comfort timeout, air-conditioning system

Diagnostic conditions

- Ignition on
- PCM2 on

Possible cause of fault

- CAN comfort (high) - open circuit
- CAN comfort (low) - open circuit

Note!

Note!

Affected pin

PCM2 plug E, pins 1 and 2

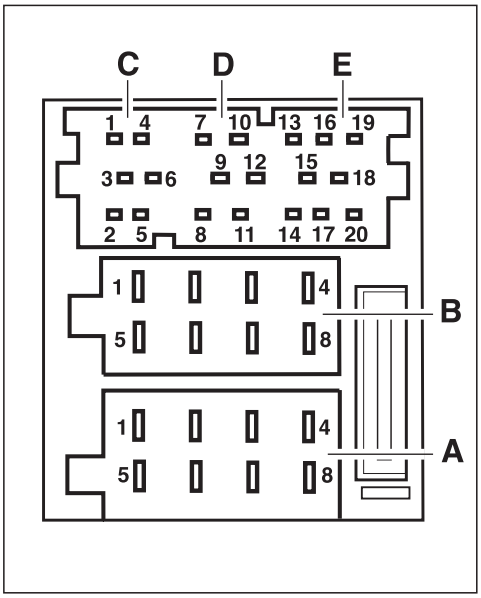

Diagnosis/troubleshooting

Work instruction			Display OK	If not OK
1	Read out PCM2 fault memory	♦ Connect the Porsche System Tester II No. 9588 to the diagnostic socket, start it and switch on the ignition ♦ Select '911 Turbo (996)' in the Vehicle type menu and confirm with the [>>] key ♦ Select 'PCM' in the control modules selection and confirm with the [>>] key ♦ Select 'PCM2/CDR23' in the control modules selection and confirm with the [>>] key ♦ Select 'PCM2 GW' in the PCM2 function selection and confirm with the [>>] key ♦ Start 'Fault memory' in the menu using the [>>] key ♦ Reading out fault memory ♦ Erase fault memory ♦ Remove ignition key and switch on ignition again ♦ Reading out fault memory ♦ Extract ambient data, press the [>>] key	→ End	Fault code is still displayed ⇒ Step 2
2	Check CAN comfort (high) for open circuit	♦ Switch off ignition ♦ Pull off plug E on the PCM2 control module ♦ Pull off plug B on the air-conditioning system control module ♦ Pull off plug A on the instrument cluster control module ♦ Measure specific resistance between pin 1 of plug E on the PCM2 control module and pin 1 of plug B on the air-conditioning control module	< 0.5 Ω ⇒ Step 3	Repair open circuit in wiring harness → End
3	Check CAN comfort (low) for open circuit	♦ Measure specific resistance between pin 2 of plug E on the PCM2 control module and pin 2 of plug B on the air-conditioning control module	< 5 Ω ⇒ Step 4	Repair open circuit in wiring harness → End
4	♦ Replace PCM2		→ End	

800B PCM2 - gateway

CAN comfort signal fault, instrument cluster

Diagnostic conditions

- Ignition on
- PCM2 on

Possible cause of fault

- Instrument cluster control module has a fault memory entry.

Note!

-
-
-
-
-

Note!

Affected pin

PCM2 plug E, pins 1 and 2

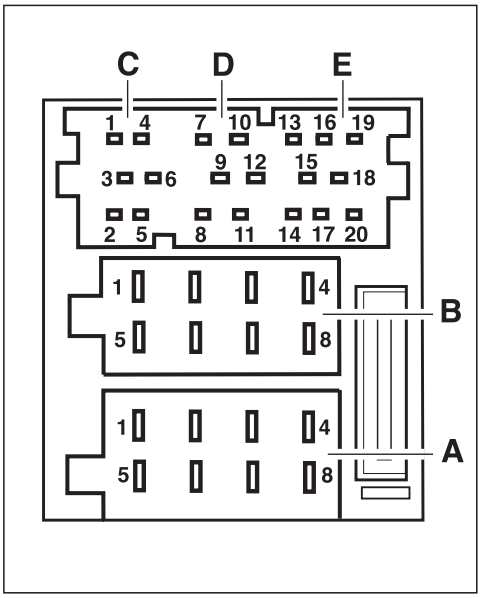

Diagnosis/troubleshooting

Work instruction			Display OK	If not OK
1	Read out PCM2 fault memory	♦ Connect the Porsche System Tester II No. 9588 to the diagnostic socket, start it and switch on the ignition ♦ Select '911 Turbo (996)' in the Vehicle type menu and confirm with the [>>] key ♦ Select 'PCM' in the control modules selection and confirm with the [>>] key ♦ Select 'PCM2/CDR23' in the control modules selection and confirm with the [>>] key ♦ Select 'PCM2 GW' in the PCM2 function selection and confirm with the [>>] key ♦ Start 'Fault memory' in the menu using the [>>] key ♦ Reading out fault memory ♦ Erase fault memory ♦ Remove ignition key and switch on ignition again. ♦ Reading out fault memory ♦ Extract ambient data, press the [>>] key	→ End	⇒ Step 2
2	Read out instrument cluster fault memory	♦ Connect the Porsche System Tester II No. 9588 to the diagnostic socket; switch on the ignition and the Porsche System Tester II No. 9588 ♦ Select vehicle type 911 Turbo (996) and start the automatic control module search ♦ In the Control units menu, select 'Instrument cluster' ♦ Start 'Fault memory' in the menu using the [>>] key ♦ Reading out fault memory ♦ Erase fault memory ♦ Remove ignition key and switch on ignition again ♦ Reading out fault memory	→ End	⇒ Step 3
3	Elimination of faults	Eliminate faults in accordance with the entry in the memory	→ End	⇒ Step 4
4	Replace PCM2		→ End	

PCM2/CDR23 (MMI)

MMI - introduction

The manual contains the diagnosis for the following system:

PCM2 - Man Machine Interface (MMI)

General instructions/safety instructions

The following points must be observed during vehicle diagnosis:

- After the battery is connected, volatile memories must be reprogrammed. In the case of radio coding and tuning, the customer must be informed of decoding and the deleted tuner memory.
- After the battery has been connected, the instructions in the assembly ⇒ 9; Rep. Gr. - ; Work instructions after disconnecting the battery must be observed.
- Deactivate the 'automatic traffic announcement' before beginning the diagnosis on the PCM2. If this is not done, the system will crash (applies only to software version < 03).
- When working on the optical waveguide, please observe the instructions in assembly ⇒ 9; Rep. Gr. 9768; Optical waveguide - MOST bus.
- After troubleshooting or repairs, erase the fault memory with the 9588 Porsche System Tester II and carry out a test drive.
- After the test drive, read out the fault memory with the 9588 Porsche System Tester II again.

Danger!

Danger of injury through triggering of driver's airbag

- ***9588 Never hang the Porsche System Tester II over the steering wheel.***

Caution!

Danger of damage due to improper handling of the battery and the control module connectors!

- ***Never disconnect battery with engine running.***

- ***Never start engine without securely connected battery.***
- ***Never pull off or push on plug connections for the control modules or other electronic components when the ignition is switched on.***

General information on the fault memory

Fault code setting conditions

Fault codes can be set in several circumstances, e.g.:

- battery disconnected.
- plug connections disconnected.
- power failure.

In these circumstances, no fault is present in the system and the fault memory must be erased.

Fault memory Info key F8

In order to be able to assess the fault exactly, the fault memory Info key F8 must be pressed. This information should be saved using the Save key F4 and printed out. If a fault code is stored with "not present" status and no other problems are present, then the fault memory must be erased.

Fault type - Frequency counter/Temperature/Voltage; Speed/Time of occurrence.

Hourmeter - first occurrence	The value indicates the operating hours at the time the fault first occurred.
Speed - first occurrence	The value indicates the vehicle speed at the time the fault occurred.
First occurrence (month, day):	The date (month and day) on which the fault was first detected is displayed. .
Temperature - first occurrence:	The value indicates the temperature (temperature sensor in the gateway) at the time the fault occurred. The temperature of the fibre optic transmitter is monitored: max 85°C.
Supply voltage - first occurrence	The value indicates the voltage at the time the fault occurred.
Fault type	The following display types are available: ♦ EEPROM fault ♦ Tuner communication fault ♦ General communication fault
Frequency counter:	When a fault first occurs, a fault entry is made in the fault memory and the counter is simultaneously set to 50. If a fault is present, the counter is incremented by 1 for each "ignition on". The maximum count is 100. The counter is decremented if the fault is no longer present. The fault memory is erased automatically when the counter reaches 0.
Hourmeter - last occurrence	The value indicates the operating hours at the time the fault was last detected.

Fault type - Frequency counter/Temperature/Voltage; Speed/Time of occurrence.	
Last occurrence (month, day):	The date (month and day) on which the fault was last detected is displayed.
Temperature - last occurrence:	The value indicates the temperature (temperature sensor in the gateway) at the time the fault was last detected. The temperature of the fibre optic transmitter (FOT) is monitored: max 85 °C.
Supply voltage - last occurrence	The value indicates the voltage at the time the fault last occurred.
Key code:	The button which has caused the fault is displayed in plain text.

Display '*' in the menu 'Control modules' and menu 'PCM2 MOST component check'.

Different required and actual installed components lists

When the 'automatic control module search' is complete, the following display '*' appears in front of the control module description 'PCM2' in the 'Control modules' menu, as well as in the 'PCM2 MMI function selection' in front of the entry 'MOST required installed components list' if the 9588 Porsche System Tester II establishes a difference between the required and actual installed components list and there is no fault code in one of the fault memories of the MOST control modules.

If there is a fault code present in one of the MOST control modules, the display '*' is only shown in the 'PCM2 MMI function selection' in front of the line 'MOST required installed components list'.

If there is a display in the menu Control module, an existing fault code has priority and a '#' is set.

Vehicle hand-over

The PCM2 is converted to delivery mode (low-current mode) in production. As known from other systems (alarm system, instrument cluster, roll-over bar), the PCM2 must be activated with the 9588 Porsche System Tester II.

1. 9588 Connect and start the Porsche System Tester II and switch on the ignition.
2. Select the menu item 'Special functions' and press the [>>] key.
3. Select the menu item 'Vehicle hand-over' and press the [>>] key.
4. Follow the instructions of the 9588 Porsche System Tester II.

Country-specific tuner settings

The following country-specific tuner settings can be coded:

- Europe.
- North America.
- South America.
- Australia.
- Asia.
- South Africa.
- Japan.

Coding country-specific tuner settings

1. 9588 Connect and start the Porsche System Tester II and switch on the ignition.
2. Select '911 Turbo (996)' in the Vehicle type menu and confirm with the [>>] key.
3. Select 'PCM2' in the control modules selection and confirm with the [>>] key.
4. Select 'PCM2 MMI' in the PCM2 function selection and confirm with the [>>] key.
5. Select 'Coding' in the PCM2 MMI function selection and confirm with the [>>] key.
6. Select 'Tuner parameters' in the PCM2 MMI coding function selection and confirm with the [>>] key.
7. Take the country-specific code as it appears in the table, enter it in the form and code with the [F8] key.

Coding PCM2

1. 9588 Connect and start the Porsche System Tester II and switch on the ignition.
2. Select '911 Turbo (996)' in the Vehicle type menu and confirm with the [>>] key.
3. Select 'PCM2' in the control modules selection and confirm with the [>>] key.
4. Select 'PCM2 MMI' in the PCM2 function selection and confirm with the [>>] key.
5. Select 'Coding' in the PCM2 MMI function selection and confirm with the [>>] key.

6. Select 'PCM2 code' in the PCM2 GW coding and confirm with the [>>] key.
7. Take the PCM2 code from 'IPAS', enter it in the form and code with the [F8] key.

Production mode

If the MOST control module is set to Production mode on, it is in low-current mode. The display remains black, the control module cannot function.

1. 9588 Connect and start the Porsche System Tester II and switch on the ignition.
2. Select '911 Turbo (996)' in the Vehicle type menu and confirm with the [>>] key.
3. Select 'PCM2' in the control modules selection and confirm with the [>>] key.
4. Select 'PCM2 GW' in the control modules selection and confirm with the [>>] key.
5. Select 'Coding' in the PCM2 GW function selection and confirm with the [>>] key.
6. Select 'Production mode' in the PCM2 GW coding and confirm with the [>>] key.
7. Select 'Production mode off' menu and code with the [F8] key.

The following options can be coded:

- Production mode off
- Production mode on

Control module replacement - PCM2

The PCM2 is supplied in 'production mode on' in new vehicles and as a spare part. Before putting the PCM2 into operation, the 'Production mode on' must be set to 'Production mode off' in the Coding menu when selecting the function of the PCM2-GW, and the vehicle must be locked and secure. Afterwards, PCM2 is functional. The procedure is explained in detail under 'Production mode'.

Tools - MMI

Danger of injury through triggering of driver's airbag

- ***Never hang the Porsche System Tester II No. 9588 over the steering wheel.***
- ***Always place tools and special tools outside the functioning range of all airbags!***

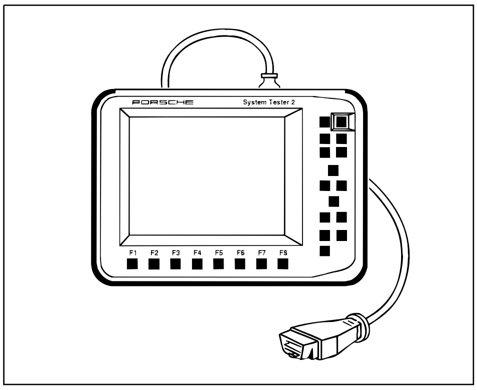

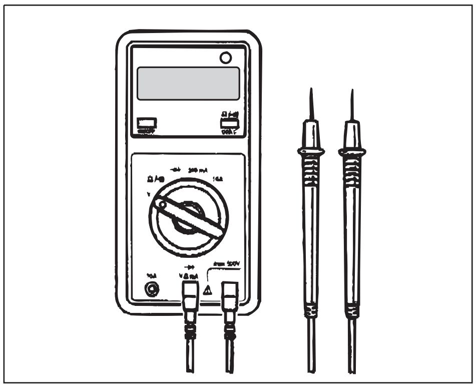

□□□

Component arrangement - MMI

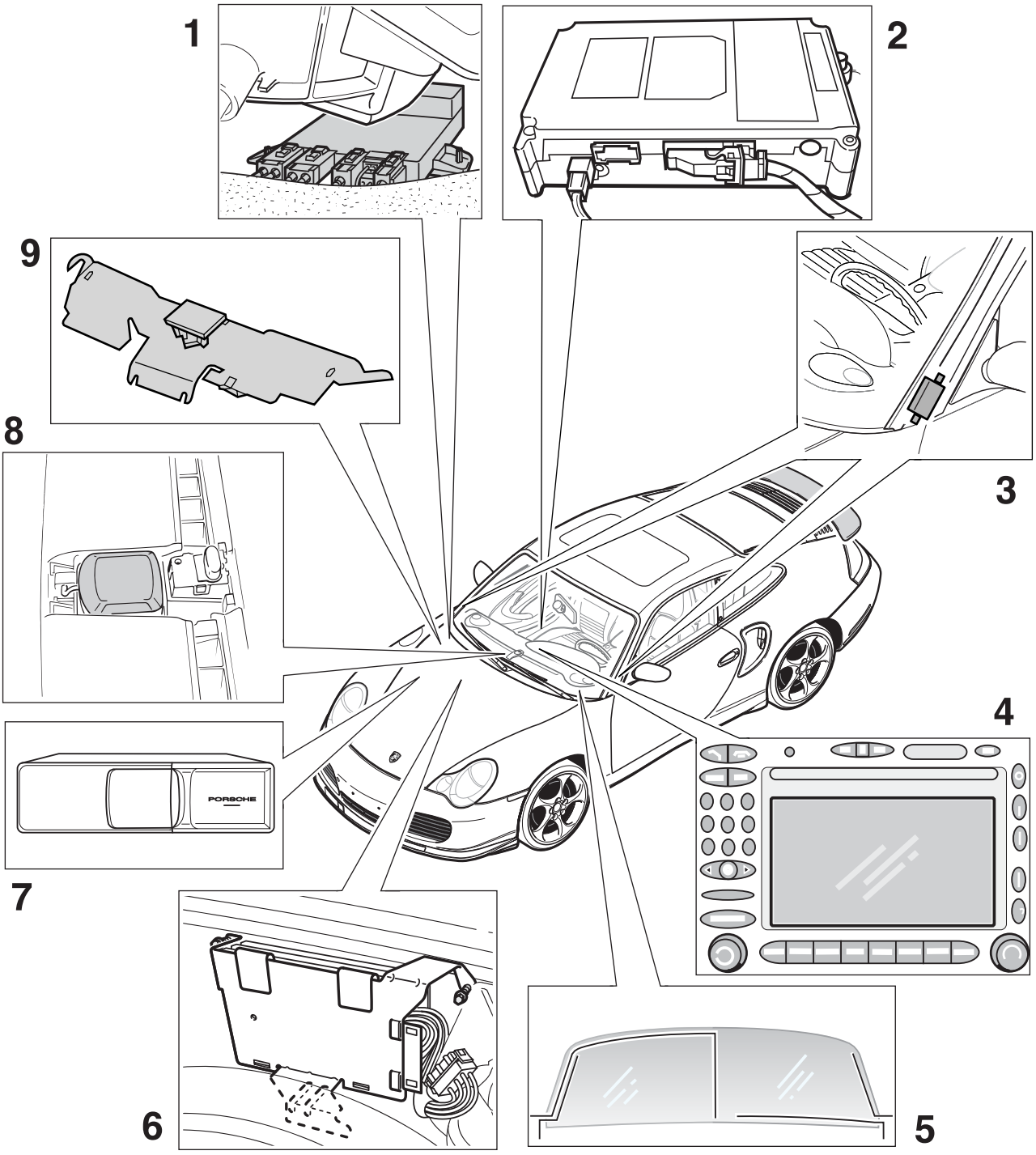

1 - Diversity antenna control unit.

2 - Telephone/telematics control unit

3 - Antenna amplifiers left and right.

4 - PCM2.

5 - Windscreen antenna

6 - External amplifier (option Harman/BOSE).

7 - CD changer

8 - GPS antenna

9 - GSM antenna

Loudspeaker basic system

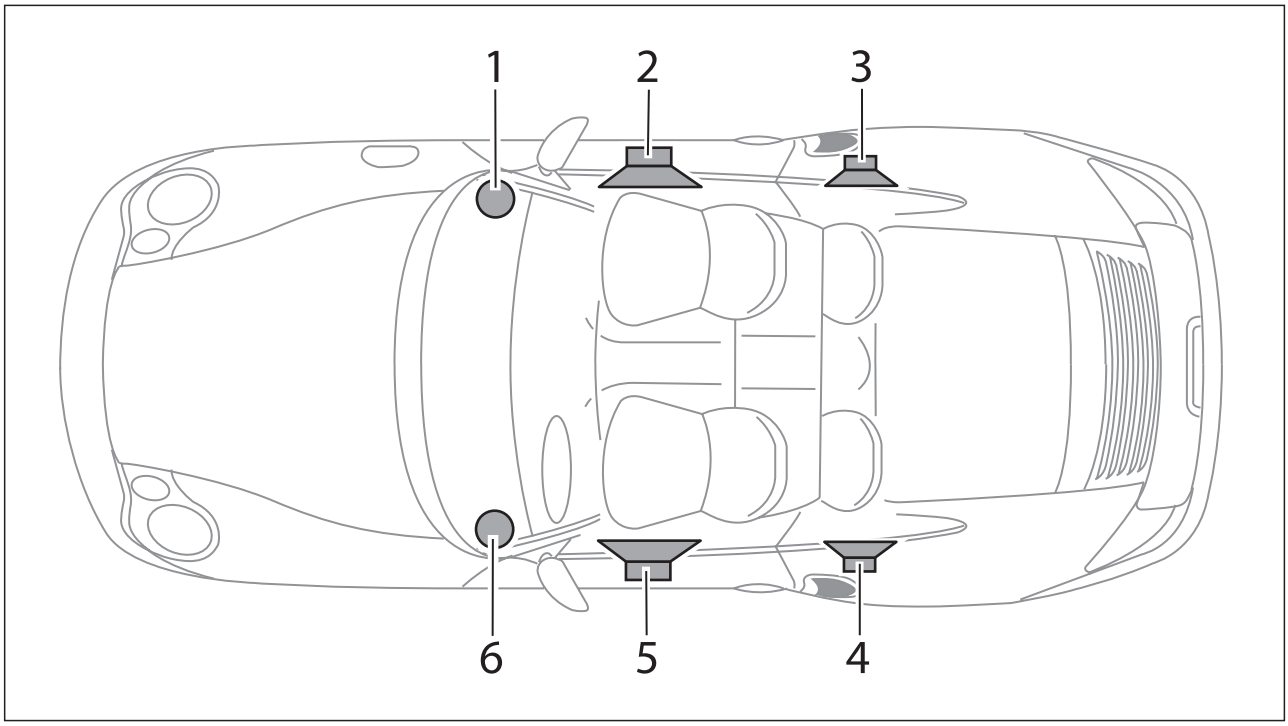

1 - Loudspeaker, front right.

2 - Loudspeaker, door right.

3 - Loudspeaker, rear door right.

4 - Loudspeaker, rear door left.

5 - Loudspeaker, front door left.

6 - Loudspeaker, front left.

Loudspeaker sound package

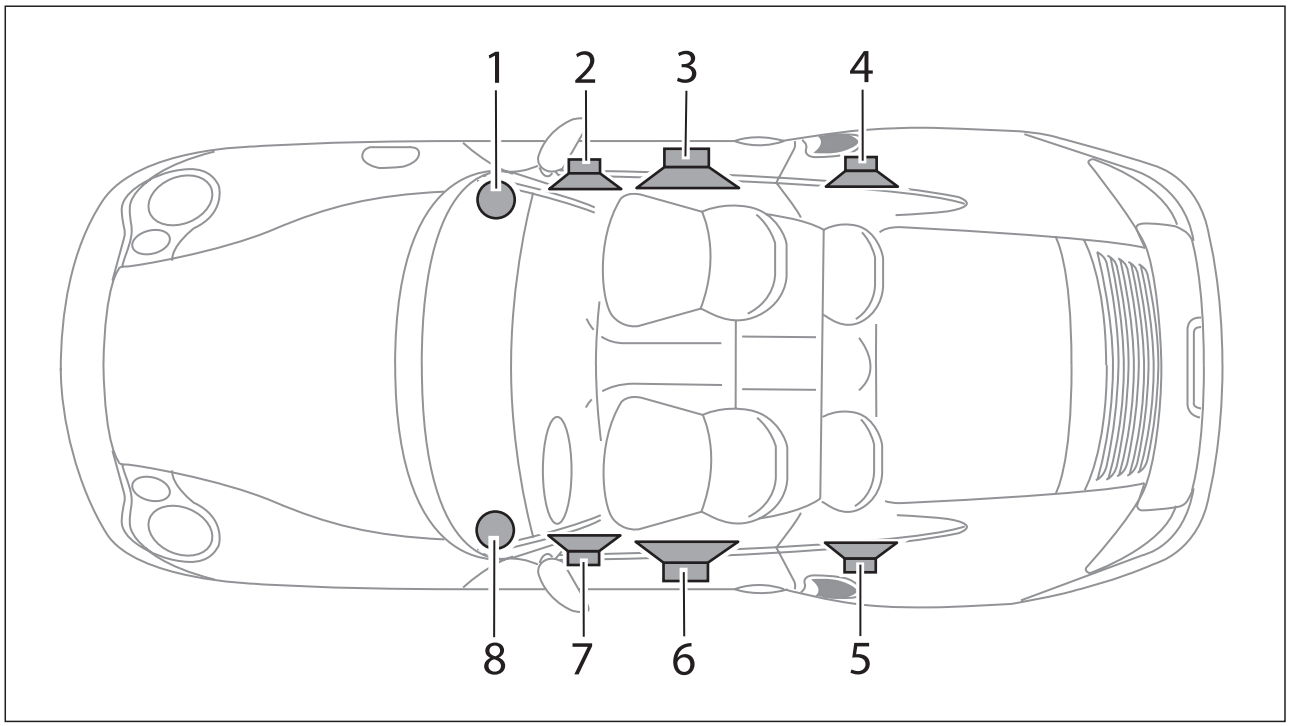

1 - High-pitch loudspeaker, dashboard right.

2 - Middle-pitch loudspeaker, front door right.

3 - Low-pitch loudspeaker, front door right.

4 - Loudspeaker, rear door right.

5 - Loudspeaker, rear door left.

6 - Low-pitch loudspeaker, front door left.

7 - Middle-pitch loudspeaker, front door left.

8 - High-pitch loudspeaker, dashboard left.

High-End loudspeaker

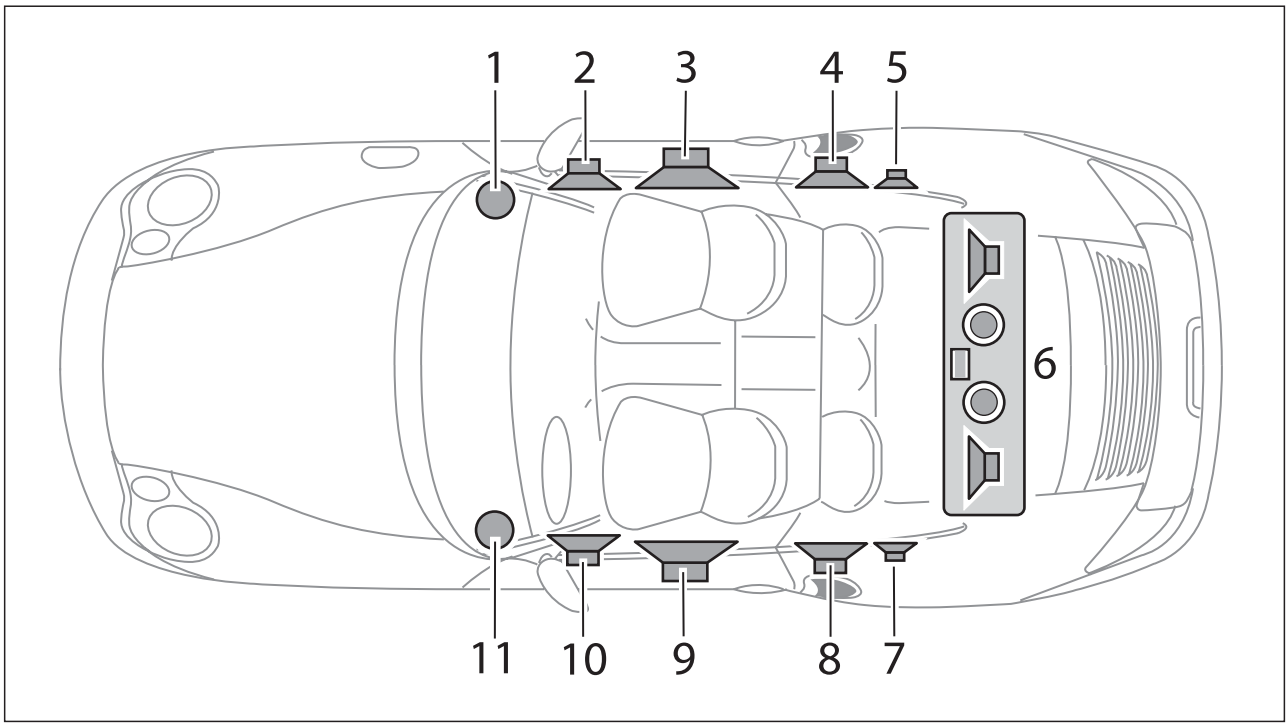

1 - High-pitch loudspeaker, dashboard right.
2 - Middle-pitch loudspeaker, front door right.
3 - Low-pitch loudspeaker, front door right.
4 - Middle-pitch loudspeaker, rear door right.
5 - High-pitch loudspeaker, rear door right.
6 - Subwoofer
7 - High-pitch loudspeaker, rear door left.
8 - Middle-pitch loudspeaker, rear door left.
9 - Low-pitch loudspeaker, door left.
10 - Middle-pitch loudspeaker, door left.
11 - High-pitch loudspeaker, dashboard left.

MMI connector assignment

Connector assignment

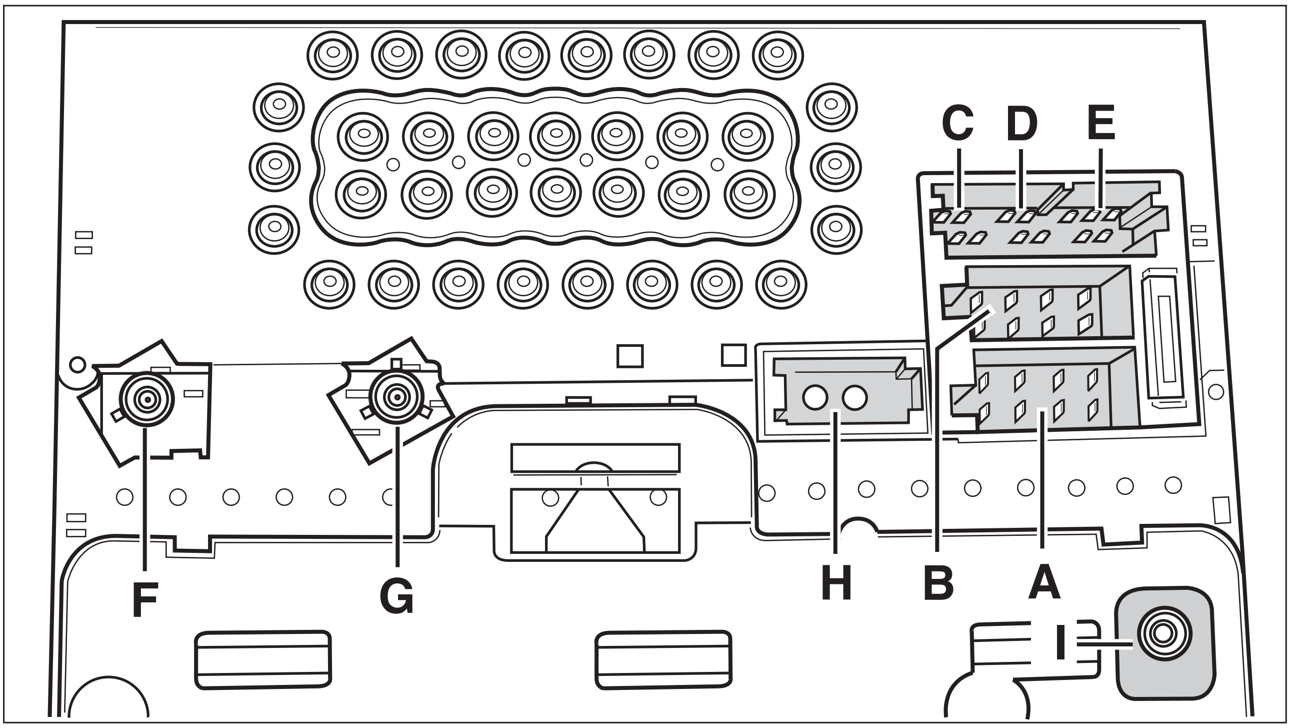

[illegible]

[illegible]	[illegible]	[illegible]	[illegible]
[illegible]	[illegible]	[illegible]	[illegible]
[illegible]	[illegible]	[illegible]	[illegible]
[illegible]	[illegible]	[illegible]	[illegible]
[illegible]	[illegible]	[illegible]	[illegible]

[illegible]

[illegible]	[illegible]	[illegible]	[illegible]
[illegible]	[illegible]	[illegible]	[illegible]
[illegible]	[illegible]	[illegible]	[illegible]
[illegible]	[illegible]	[illegible]	[illegible]
[illegible]	[illegible]	[illegible]	[illegible]

□□□□□□□□□□□□□□

□□□

Control unit function - MMI

Terminating resistors in the CAN

Terminating resistors are fitted to each end of the wiring to prevent reflection on the wiring. These terminating resistors are integrated into each control module. The interconnection prevents the resistors from being measured with the ohmmeter from the outside.

CAN comfort

Communication between the 9588 Porsche System Tester II and the MOST control modules only takes place via the K lead to the instrument cluster. The data is transferred from the instrument cluster gateway to the MOST control modules, via CAN Comfort to the PCM2 gateway, via the electrical MOST in the PCM2 and via the optical MOST outside of the PCM2.

CD changer (CDC)

The CDC is available as an optional feature and is linked to the PCM2 via the optical waveguide.

Coding table

Coding type	**PCM2 GW**	**PCM2 MMI**	**CDR23**	**Navigation**	**Harman amplifier**	**BOSE amplifier**	**CD changer**	**Telephone**
ABS pulse number				X				
Call automatically accepted		X						
Display format		X		X				
Date		X		X				
Display dimming (background)		X						
Units	X	X		X				
External handset								X
Vehicle type vehicle coding	X	X	X	X	X	X		
Vehicle version vehicle coding	X	X	X	X	X	X		
Right/left-hand drive vehicle coding	X	X	X	X	X	X		

Coding type	PCM2 GW	PCM2 MMI	CDR23	Navigation	Harman amplifier	BOSE amplifier	CD changer	Telephone
Wheel size				X				
GAL (NLB)		X	X					
Height/width in per cent				X				
Synchronize K-number	X	X		X				
Real K-number	X	X		X				
Air conditioning	X	X		X				
Country coding	X	X		X				
Main set-up menu		X						
MOST switch	X							
MOST required installed components list		X	X					
Engine version	X*	X*		X*		X*		
PCM2 code		X	X					
Phone status		X						
Porsche Assistance, international designation		X						
Porsche Assistance, international number		X						
Porsche Assistance menu		X						
Porsche Assistance, national designation		X						
Porsche Assistance, national number		X						
Production mode	X		X					
Tyre width				X				
Tyre condition				X				
Summer/winter time		X		X				
Time-out		X						
Tuner parameters	X		X					
User data			X					

Coding type	PCM2 GW	PCM2 MMI	CDR23	Naviga-tion	Harman ampli-fier	BOSE amplifier	CD changer	Tele-phone
Traffic broadcast loudspeaker boost		X	X					
Time		X		X				
Time zone		X		X				
* Only valid for Cayenne E1								

Coding

Under the menu item 'Modify coding', the PCM2 codes can be extracted and the PCM2 coded on a country-specific basis.

Menu item	Function
♦ Call automatically accepted:	Using this menu item, the PCM2 can be coded so that an incoming call can be automatically accepted: ♦ 9588 Connect and start the Porsche System Tester II and switch on the ignition. ♦ Select '911 Turbo (996)' in the Vehicle type menu and confirm with the [>>] key. ♦ Select 'PCM' in the Control modules menu and confirm with the [>>] key. ♦ Select 'PCM2-MMI' in the PCM2 function selection menu and confirm with the [>>] key. ♦ Select 'Coding' in the PCM2-MMI function selection menu and confirm with the [>>] key. ♦ Select "Call automatically accepted" in the PCM2 MMI Coding menu and confirm with the [>>] key. ♦ Select "Call automatically accepted" from the menu item displayed and code it with the [F8] key.

Menu item	Function
♦ Display format	Using this menu item, you can code the display format. ♦ 9588 Connect and start the Porsche System Tester II and switch on the ignition. ♦ Select '911 Turbo (996)' in the Vehicle type menu and confirm with the [>>] key. ♦ Select 'PCM2' in the Control modules menu and confirm with the [>>] key. ♦ Select 'PCM2 MMI' in the 911 Turbo (996) function selection and confirm with the [>>] key. ♦ Select the coding menu item and confirm with the [>>] key. ♦ Select 'Display format' in the PCM2-MMI Coding menu with the [>] key and confirm with the [>>] key. ♦ Use the arrow keys to select as required and code with the [F8] key.
♦ Date	Using this menu item, you can code the date. ♦ 9588 Connect and start the Porsche System Tester II and switch on the ignition. ♦ Select '911 Turbo (996)' in the Vehicle type menu and confirm with the [>>] key. ♦ Select 'PCM2' in the Control module menu and confirm with the [>>] key. ♦ Select 'PCM2 MMI' in the 911 Turbo (996) PCM2 function selection and confirm with the [>>] key. ♦ Select 'Coding' in the PCM2 MMI function selection menu and confirm with the [>>] key. ♦ Select 'Date' in the PCM2-MMI coding with the [v] key and confirm with the [>>] key. ♦ Use the arrow keys to select as required and code with the [F8] key.

Menu item	Function
♦ Units	Using this menu item, you can code the relevant units. ♦ 9588 Connect and start the Porsche System Tester II and switch on the ignition. ♦ Select '911 Turbo (996)' in the Vehicle type menu and confirm with the [>>] key. ♦ Select 'PCM2' in the Control modules menu and confirm with the [>>] key. ♦ Select 'PCM2 MMI' in the 911 Turbo (996) function selection menu and confirm with the [>>] key. ♦ Select 'Coding' in the PCM2-MMI function selection menu and confirm with the [>>] key. ♦ Select "Units" in the PCM2 MMI coding menu and confirm with the [>>] key. ♦ Select "the relevant units" from the menu item that is displayed and code them with the [F8] key. The following selection is available: ♦ Metric, RoW (°C, litre, km) ♦ UK English (°C, gallon, mph) ♦ US English (°F, gallon, mph)
♦ Vehicle type vehicle coding	Under this menu item, the PCM2 MMI corresponding to the vehicle type can be coded. ♦ 9588 Connect and start the Porsche System Tester II and switch on the ignition. ♦ Select '911 Turbo (996)' in the Vehicle type menu and confirm with the [>>] key. ♦ Select 'PCM2' in the Control module menu and confirm with the [>>] key. ♦ Select 'PCM2 MMI' in the 911 Turbo (996) function selection menu and confirm with the [>>] key. ♦ Select 'Coding' in the PCM2-MMI function selection menu and confirm with the [>>] key. ♦ Select 'Vehicle type vehicle coding' in the Coding menu and confirm with the [>>] key. ♦ Select "911 Turbo (996)" in the menu and code with the [F8] key.

Menu item	Function
♦ Vehicle version vehicle coding	Under this menu item, the PCM2 MMI corresponding to the vehicle version can be coded. ♦ 9588 Connect and start the Porsche System Tester II and switch on the ignition. ♦ Select '911 Turbo (996)' in the Vehicle type menu and confirm with the [>>] key. ♦ Select 'PCM2' in the Control module menu and confirm with the [>>] key. ♦ Select 'Coding' in the 911 Turbo (996) function selection menu and confirm with the [>>] key. ♦ Select "Vehicle version" in the PCM2 coding menu and confirm with the [>>] key. ♦ Select the relevant version "Coupe, Cabrio, Targa" in the menu and code with the [F8] key.
♦ Right/left-hand drive vehicle coding	Under this menu item, the PCM2 MMI corresponding to the vehicle version can be coded. ♦ 9588 Connect and start the Porsche System Tester II and switch on the ignition. ♦ Select '911 Turbo (996)' in the Vehicle type menu and confirm with the [>>] key. ♦ Select 'PCM2' in the Control module menu and confirm with the [>>] key. ♦ Select 'Coding' in the 911 Turbo (996) function selection menu and confirm with the [>>] key. ♦ Select "Right/left-hand drive vehicle coding" in the PCM2 MMI coding menu and confirm with the [>>] key. ♦ Select 'Right/left-hand drive vehicle coding' in the Modify PCM2 coding menu and confirm with the [>>] key. ♦ Select "Right or left-hand drive" in the menu corresponding to the vehicle equipment and code with the [F8] key.

Menu item	Function
♦ GAL (noise-dependent loudspeaker boost — NLB)	Under this menu item, the PCM2 MMI corresponding to the noise-dependent loudspeaker boost can be coded. ♦ 9588 Connect and start the Porsche System Tester II and switch on the ignition. ♦ Select '911 Turbo (996)' in the Vehicle type menu and confirm with the [>>] key. ♦ Select 'PCM2' in the Control module menu and confirm with the [>>] key. ♦ Select 'PCM2 MMI' in the 911 Turbo (996) function selection menu and confirm with the [>>] key. ♦ Select "Coding" in the PCM2 MMI menu and confirm with the [>>] key. ♦ Select "Coding" in the PCM2 MMI menu and confirm with the [>>] key. ♦ Select 'GAL' in the PCM2 Coding menu and confirm with the [>>] key. ♦ Select "Value" corresponding to the desired volume and code with the [F8] key.
♦ Air conditioning with/without	Under this menu item, the PCM2 MMI corresponding to the air conditioning equipment can be coded: ♦ 9588 Connect and start the Porsche System Tester II and switch on the ignition. ♦ Select '911 Turbo (996)' in the Vehicle type menu and confirm with the [>>] key. ♦ Select 'PCM2' in the control modules selection and confirm with the [>>] key. ♦ Select 'PCM2 MMI' in the PCM2 function selection and confirm with the [>>] key. ♦ Select 'Coding' in the PCM2 MMI menu and confirm with the [>>] key. ♦ Select 'Air conditioning' in the PCM2 MMI Coding menu and confirm with the [>>] key. ♦ Select "Air conditioning with/without" corresponding to the equipment in the Modify PCM2 MMI Coding menu item and code with the [F8] key.

Menu item	Function
♦ Country coding	Using this menu item, you can code the country code. ♦ 9588 Connect and start the Porsche System Tester II and switch on the ignition. ♦ Select '911 Turbo (996)' in the Vehicle type menu and confirm with the [>>] key. ♦ Select 'PCM2' in the control modules selection and confirm with the [>>] key. ♦ Select 'PCM2 MMI' in the PCM2 function selection and confirm with the [>>] key. ♦ Select 'Coding' in the PCM2 MMI menu and confirm with the [>>] key. ♦ Select 'Country coding' in the PCM2 MMI Coding menu and confirm with the [>>] key. ♦ Select "the relevant country coding" from the menu displayed and code it with the [F8] key.
♦ Main set-up menu	
♦ PCM2 code	Under this menu item, the PCM2 code can be coded after replacing the PCM2. ♦ 9588 Connect and start the Porsche System Tester II and switch on the ignition. ♦ Select '911 Turbo (996)' in the Vehicle type menu and confirm with the [>>] key. ♦ Select 'PCM2' in the control modules selection and confirm with the [>>] key. ♦ Select 'PCM2 MMI' in the 911 Turbo (996) function selection menu and confirm with the [>>] key. ♦ Select 'Coding' in the PCM2-MMI function selection menu and confirm with the [>>] key. ♦ Select 'PCM2 code' in the menu PCM2 MMI Coding menu and confirm with the [>>] key. ♦ Take the PCM2 code from IPAS, enter it using the arrow keys and code it with the [F8] key.

Menu item	Function
♦ Porsche Assistance, international designation	Using this menu item, you can code the Porsche Assistance, international designation as appropriate. ♦ 9588 Connect and start the Porsche System Tester II and switch on the ignition. ♦ Select '911 Turbo (996)' in the Vehicle type menu and confirm with the [>>] key. ♦ Select 'PCM2' in the Control modules menu and confirm with the [>>] key. ♦ Select 'PCM2 MMI' in the '911 Turbo (996)' PCM2 function selection and confirm with the [>>] key. ♦ Select 'Coding' in the '911 Turbo (996)' PCM2-MMI function selection and confirm with the [>>] key. ♦ Select 'Porsche Assistance, international designation' in the '911 Turbo (996)' PCM2-MMI Coding function selection and confirm with the [>>] key. ♦ In the Modify PCM2 MMI coding function selection, use the direction arrows to input data and code with the [F8] key.
♦ Porsche Assistance, international number	Using this menu item, you can code the Porsche Assistance, international designation as appropriate. ♦ 9588 Connect and start the Porsche System Tester II and switch on the ignition. ♦ Select vehicle type 911 Turbo (996) in the menu and confirm with the [>>] key. ♦ Select 'PCM2' in the Control modules menu and confirm with the [>>] key. ♦ Select 'PCM2 MMI' in the 911 Turbo (996) PCM2 function selection and confirm with the [>>] key. ♦ Select 'Coding' in the 911 Turbo (996) PCM2 MMI function selection and confirm with the [>>] key. ♦ Select 'Porsche Assistance, international number' in the 911 Turbo (996) PCM2 MMI Coding and confirm with the [>>] key. ♦ In the Modify PCM2 MMI coding function selection, use the direction arrows to input data and code with the [F8] key.

Menu item	Function
♦ Porsche Assistance, national designation	Using this menu item, you can code the Porsche Assistance, national designation as appropriate. ♦ 9588 Connect and start the Porsche System Tester II and switch on the ignition. ♦ Select '911 Turbo (996)' in the Vehicle type menu and confirm with the [>>] key. ♦ Select 'PCM2' in the Control modules menu and confirm with the [>>] key. ♦ Select 'PCM2 MMI' in the 911 Turbo (996) PCM2 function selection and confirm with the [>>] key. ♦ Select 'Coding' in the 911 Turbo (996) PCM2 MMI function selection and confirm with the [>>] key. ♦ Select "Porsche Assistance, national designation" in the Boxster PCM2 MMI coding and confirm with the [>>] key. ♦ In the Modify PCM2 MMI coding function selection, use the direction arrows to input data and code with the [F8] key.
♦ Porsche Assistance, national number	Using this menu item, you can code the Porsche Assistance, national number as appropriate. ♦ 9588 Connect and start the Porsche System Tester II and switch on the ignition. ♦ Select vehicle type 911 Turbo (996) in the menu and confirm with the [>>] key. ♦ Select 'PCM2' in the Control modules menu and confirm with the [>>] key. ♦ Select 'Coding' in the 911 Turbo (996) PCM2 function selection and confirm with the [>>] key. ♦ Select 'Porsche Assistance, national number' in the 911 Turbo (996) PCM2 MMI Coding and confirm with the [>>] key. ♦ In the Modify PCM2 MMI coding function selection, use the direction arrows to input data and code with the [F8] key.

Menu item	Function
♦ Summer/winter time	Using this menu item, you can code the PCM2 for summer/winter time. ♦ 9588 Connect and start the Porsche System Tester II and switch on the ignition. ♦ Select '911 Turbo (996)' in the Vehicle type menu and confirm with the [>>] key. ♦ Select 'PCM2' in the Control module menu and confirm with the [>>] key. ♦ Select 'PCM2 MMI' in the 911 Turbo (996) function selection and confirm with the [>>] key. ♦ Select 'Coding' in the PCM2-MMI function selection menu and confirm with the [>>] key. ♦ Select "Summer/winter time" with the [v] key in the PCM2-MMI Coding menu and confirm with the [>>] key. ♦ Code the selection required with the [F8] key.
♦ Time-out	
♦ Traffic broadcast loudspeaker boost	Under this menu item, the traffic broadcast loudspeaker boost in the PCM2 can be coded. ♦ 9588 Connect and start the Porsche System Tester II and switch on the ignition. ♦ Select '911 Turbo (996)' in the Vehicle type menu and confirm with the [>>] key. ♦ Select 'PCM2' in the Control module menu and confirm with the [>>] key. ♦ Select 'PCM2 MMI' in the 911 Turbo (996) PCM2 function selection menu and confirm with the [>>] key. ♦ Select 'Coding' in the PCM2-MMI function selection menu and confirm with the [>>] key. ♦ Select 'Traffic broadcast loudspeaker boost' in the PCM2-MMI Coding with the [v] key and confirm with the [>>] key. ♦ Code the selection required with the [F8] key.

Menu item	Function
♦ Time	Using this menu item, you can code the current time. ♦ 9588 Connect and start the Porsche System Tester II and switch on the ignition. ♦ Select '911 Turbo (996)' in the Vehicle type menu and confirm with the [>>] key. ♦ Select 'PCM2' in the Control units selection menu and confirm with the [>>] key. ♦ Select 'PCM2 MMI' in the 911 Turbo (996) PCM2 function selection menu and confirm with the [>>] key. ♦ Select 'Coding' in the PCM2-MMI function selection menu and confirm with the [>>] key. ♦ Select 'Time' in the PCM2 MMI coding menu and confirm with the [>>] key. ♦ Select the required 'time' using the arrow keys [v] [<] [>] [Δ] and code with the [F8] key.
♦ Time zone	Using this menu item, you can code the required time zone. ♦ 9588 Connect and start the Porsche System Tester II and switch on the ignition. ♦ Select '911 Turbo (996)' in the Vehicle type menu and confirm with the [>>] key. ♦ Select 'PCM2' in the Control units selection menu and confirm with the [>>] key. ♦ Select 'PCM2 MMI' in the 911 Turbo (996) PCM2 function selection menu and confirm with the [>>] key. ♦ Select 'Coding' in the PCM2-MMI function selection menu and confirm with the [>>] key. ♦ Select "Time zone" in the PCM2 MMI Coding menu and confirm with the [>>] key. ♦ Select the 'Time zone' corresponding to the country of registration using the [>] key and code with the [F8] key.

Data transfer fault

If faults are detected when the data is decoded, this is known as a data transfer fault. The faults can arise when the data is encoded, when the data is transferred through an input level that is optically too low or when the data is decoded. A fault entry is not recorded.

Note!

Using the function 'Reset all coding/transfer counters' all set fault counters of all components can be collectively reset to '0'.

Extended fault memory

Additional data from the PCM2 MMI can be read out using this menu item:

- Tuner communication fault.
- Fault type:.
- Communication fault
- Frequency counter.
- First occurrence (month, day)
- First occurrence (temperature)
- Speed - first occurrence
- Supply voltage - first occurrence
- Hourmeter - first occurrence
- Last occurrence (month, day)
- Last occurrence (temperature)
- Last occurrence (speed)
- Supply voltage - last occurrence
- Hourmeter - last occurrence

Note!

Deactivate the 'automatic traffic announcement' before performing the diagnosis on the PCM2. If this is not done, the diagnosis will abort (applies only to software version numbers < 03).

Extended identification

The following data from the PCM2 MMI can be read out using this menu item:

- CRIN (Car Radio Identification Number)
- VIN (Vehicle Identification Number)
- Part number
- System Supplier ECU Hardware Number (cw, year)
- System Supplier ECU Hardware Version Number.
- System Supplier ECU Software Number (cw, year)
- System Supplier ECU Software Version Number.
- Porsche workshop number
- Diagnosis software number
- Date ECU manufacturing (YYYY.MM.DD).

1. 9588 Connect and start the Porsche System Tester II and switch on the ignition.
2. Select '911 Turbo (996)' in the Vehicle type menu and confirm with the [>>] key.
3. Select 'PCM' in the control modules selection and confirm with the [>>] key
4. Select 'PCM2 MMI' in the 911 Turbo (996) PCM2 function selection and confirm with the [>>] key.
5. Select the "Identification" menu item and press the [>>] key.
6. "Diagnosis software number; PCM2 parts number" appears on the display.
7. 'Extended identification' can be called up with the [F8] key.

Note!

Deactivate the 'automatic traffic announcement' before performing the diagnosis on the PCM2. If this is not done, the diagnosis will abort (applies only to software version numbers < 03).

Function of the components

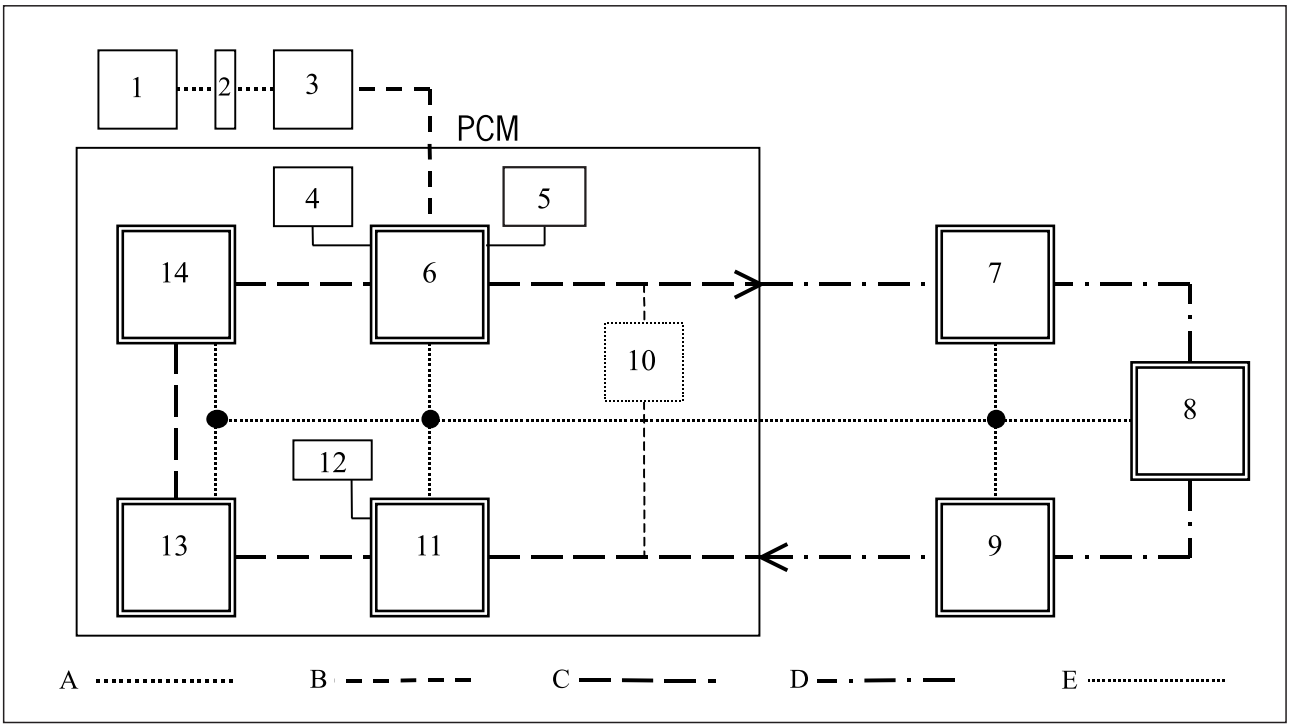

A - K lead
B - CAN comfort
C - Electrical MOST (internal)
D - Optical MOST (external)
E - MOST diagnosis lead
1 - 9588 Porsche System Tester II
2 - Diagnostic box
3 - Instrument cluster (gateway)
4 - PCM2 (internal amplifier)
5 - PCM2 (tuner)
6 - PCM2 (gateway) (MOST nodes)
7 - External amplifier (MOST nodes)
8 - CDC (CD changer) (MOST nodes)
9 - Telephone/telematics (MOST nodes)
10 - PCM2 (MOST switch)
11 - MMI (Man Machine Interface) (MOST nodes)
12 - PCM2 single CD
13 - Navigation (MOST nodes)
14 - VOCS (voice control system) (MOST nodes)

Gateway

The gateway is integrated in the PCM2. Together with the MMI, it is a fixed component of each PCM2. It provides a connection to CAN Comfort via its nodes. Diagnostic and useful data is exchanged with the CAN via these nodes.

It creates links to the following systems:

- CAN Comfort
- Media Oriented Systems Transport (MOST), internal (electrical)
- Voice control system (VOCS) (optional/insertion)
- Navigation (optional/insertion)
- Man Machine Interface (MMI)
- Single CD
- Media Oriented Systems Transport (MOST), external bus (optical)
- Amplifier optional (Harman or BOSE)
- CD changer
- Telephone/telematics

Identification

The diagnosis software number and the part numbers for the PCM2 can be read out under this menu item.

1. 9588 Connect and start the Porsche System Tester II and switch on the ignition.
2. Select '911 Turbo (996)' in the Vehicle type menu and confirm with the [>>] key.
3. Select 'PCM2' in the control modules selection and confirm with the [>>] key.
4. Select 'PCM2 MMI' in the 911 Turbo (996) PCM2 function selection menu and confirm with the [>>] key.
5. Select 'Identification' in the PCM2 MMI function selection and confirm with the [>>] key.
6. "Diagnosis software number; PCM2 part number" appear on the display.
7. Call up "Extended identification" by pressing the [F8] key

Actual values

It is possible to read out the unlock counter under the 'Actual values' menu item.

Menu item	Function
♦ Date	Using this menu item, you can read out the current date from the PCM2. ♦ 9588 Connect and start the Porsche System Tester II and switch on the ignition. ♦ Select '911 Turbo (996)' in the Vehicle type menu and confirm with the [>>] key. ♦ Select 'PCM2' in the control modules selection and confirm with the [>>] key. ♦ Select 'PCM2 MMI' in the 911 Turbo (996) function selection and confirm with the [>>] key. ♦ Select the Actual values menu item and press the [>>] key. ♦ Select "Date" in the PCM2-MMI Actual values menu with the [>] key and confirm with the [>>] key. ♦ Read out values from the display field.

Menu item	Function
♦ Transmission errors	Using this menu item, you can read out the current time from the PCM2. ♦ 9588 Connect and start the Porsche System Tester II and switch on the ignition. ♦ Select '911 Turbo (996)' in the Vehicle type menu and confirm with the [>>] key. ♦ Select 'PCM2' in the control modules selection and confirm with the [>>] key. ♦ Select 'PCM2 MMI' in the 911 Turbo (996) function selection and confirm with the [>>] key. ♦ Select the actual values menu item and confirm with the [>>] key. ♦ Select "Transmission error" in the PCM2-MMI Actual values menu with the [>] key and confirm with the [>>] key. ♦ Read out values from the display field.
♦ Time	Using this menu item, you can read out the current time from the PCM2. ♦ 9588 Connect and start the Porsche System Tester II and switch on the ignition. ♦ Select '911 Turbo (996)' in the Vehicle type menu and confirm with the [>>] key. ♦ Select 'PCM2' in the control modules selection and confirm with the [>>] key. ♦ Select 'PCM2 MMI' in the 911 Turbo (996) function selection and confirm with the [>>] key. ♦ Select the actual values menu item and confirm with the [>>] key. ♦ Select "Time" in the PCM2-MMI Actual values menu with the [>] key and confirm with the [>>] key. ♦ Read out values from the display field.
♦ Unlock counter	Using this menu item, setting of the traffic broadcast loudspeaker boost can be read out. ♦ 9588 Connect and start the Porsche System Tester II and switch on the ignition. ♦ Select '911 Turbo (996)' in the Vehicle type menu and confirm with the [>>] key. ♦ Select 'PCM2' in the control modules selection and confirm with the [>>] key. ♦ Select 'PCM2 MMI' in the 911 Turbo (996) PCM2 function selection and confirm with the [>>] key. ♦ Select 'Coding' in the PCM2-MMI function selection menu and press the [>>] key. ♦ Select "Unlock counter" in the PCM2-MMI Coding menu with the [>] key and confirm with the [>>] key. ♦ Read out values from the display field.

Menu item	Function
♦ Traffic broadcast loudspeaker boost	Using this menu item, setting of the traffic broadcast loudspeaker boost can be read out. ♦ 9588 Connect and start the Porsche System Tester II and switch on the ignition. ♦ Select '911 Turbo (996)' in the Vehicle type menu and confirm with the [>>] key. ♦ Select 'PCM2' in the control modules selection and confirm with the [>>] key. ♦ Select 'PCM2 MMI' in the 911 Turbo (996) PCM2 function selection and confirm with the [>>] key. ♦ Select 'Coding' in the PCM2-MMI function selection menu and press the [>>] key. ♦ Select "Traffic broadcast loudspeaker boost" in the PCM2-MMI Coding menu with the [>] key and confirm with the [>>] key. ♦ Read out values from the display field.
♦ Time zone	Using this menu item, you can read out the current time zone from the PCM2. ♦ 9588 Connect and start the Porsche System Tester II and switch on the ignition. ♦ Select '911 Turbo (996)' in the Vehicle type menu and confirm with the [>>] key. ♦ Select 'PCM2' in the control modules selection and confirm with the [>>] key. ♦ Select 'PCM2 MMI' in the 911 Turbo (996) function selection and confirm with the [>>] key. ♦ Select 'Coding' in the PCM2 MMI menu and confirm with the [>>] key. ♦ Select "Time zone" in the PCM2-MMI Coding menu with the [>] key and confirm with the [>>] key. ♦ Read out values from the display field.

Man Machine Interface (MMI)

The MMI is part of the PCM2 (on the mainboard). It carries out the diagnostics of the ring break diagnosis line (stub cable) and the diagnostics of the optical distribution line.

MOST actual and required installed components lists

All MOST control modules that are connected to the PCM2 are entered via diagnostic tester in the 'required installed components list'. Only the MOST control units recorded in the MOST required installed components list are activated. An 'actual installed compo-

nents list' of detected devices is written and saved when the PCM2 is started.

MOST lock/unlock

A lock occurs when the signal sent from the MMI via the MOST optical/electrical is understood and answered by the connected MOST control modules. This applies a correct optical MOST signal. The lock is maintained until the signal is no longer detectable for a longer period of time (several µseconds) 'unlock'.

Note!

Using the function 'Reset all coding/transfer counters' all set fault counters of all components can be collectively reset to '0'.

MOST component check

Note!

When there is a customer complaint or identifiable problems but no fault code entries, firstly the 'MOST component check' is to be selected in the PCM2 function selection menu and then the 'MOST system check' is to be carried out.

The MOST component check can be reached via the menu PCM2 function selection. This comprises a summary of the following check processes:

- Data transmission check.
- MOST system check (with engine running).
- Ring break diagnosis (with engine running).

The MOST components check 'MOST system check' is to be carried out when the display indicates 'unavailable MOST control modules'. If no fault code is stored, the '*' symbol indicates a 'varying required and actual installed components list' in the Control modules menu in front of the 'PCM2' system and in the 'PCM2 MMI function selection' in front of the selection 'MOST required installed components list'. A comparison of these two lists can determine faulty components.

Data transmission check

Note!

Using the function 'Reset all coding/transfer counters' all set fault counters of all components can be collectively reset to '0'.

Menu item	Function
♦ Data transmission check	Using this menu item, the quality of the data transmission can be assessed. This is a counter which leads to an increase in the value if faults occur within a certain time period. The check is carried out continuously at predetermined intervals. ♦ 9588 Connect and start the Porsche System Tester II and switch on the ignition. ♦ Select '911 Turbo (996)' in the Vehicle type menu and confirm with the [>>] key. ♦ Select 'PCM2' in the Control modules menu and confirm with the [>>] key. ♦ Select 'MOST components check' in the PCM2 function selection and confirm with the [>>] key. ♦ Select "Data transmission check" in the 911 Turbo (996) PCM2 MOST components check function selection and confirm with the [>>] key.

MOST system check (with engine running)

Menu item	Function
♦ MOST system check (with engine running).	Using this menu item, a MOST system check can be carried out with the ignition on. The following checks are carried out automatically and their results are displayed. ♦ Gateway start-up condition is read out. ♦ MOST installed components list (required and actual installed components list) is analysed. ♦ Ring line diagnosis. ♦ 9588 Connect and start the Porsche System Tester II and switch on the ignition. ♦ Select '911 Turbo (996)' in the Vehicle type menu and confirm with the [>>] key. ♦ Select 'PCM2' in the Control modules menu and confirm with the [>>] key. ♦ Select 'MOST components check' in the PCM2 function selection and confirm with the [>>] key. ♦ Select "MOST system check" in the 911 Turbo (996) PCM2 MOST components check function selection and confirm with the [>>] key. ♦ Follow the Tester instructions. Whenever there are several ring breaks, the 1st ring break is displayed in the following order: ♦ PCM2 Gateway > external amplifier. ♦ External amplifier > CD changer. ♦ CD changer > telephone. ♦ Telephone > PCM2 MMI. is displayed. Then the check is terminated. ♦ Start the optical performance check.

Ring break diagnosis (with engine running)

Menu item	Function
♦ Ring break diagnosis (with engine running).	Using this menu item, a ring break diagnosis can be carried out (with the engine running). ♦ 9588 Connect and start the Porsche System Tester II and switch on the ignition. ♦ Select '911 Turbo (996)' in the Vehicle type menu and confirm with the [>>] key. ♦ Select 'PCM2' in the Control modules menu and confirm with the [>>] key. ♦ Select 'MOST components check' in the PCM2 function selection and confirm with the [>>] key. ♦ Select "Ring break diagnosis (when the engine is running)" in the 911 Turbo (996) PCM2-GW MOST components check function selection and confirm with the [>>] key.

MOST - optical/electrical

MOST signals are transferred electrically within the PCM2 and optically outside of the PCM2. Internally, the PCM2 consists of at least 2 nodes (GW and MMI), which are installed in the device and can also be expanded to four nodes by adding the navigation and VOCS nodes.

The data is transferred outside of the PCM2 via the optical waveguide, which creates a connection to the nodes in the external MOST control modules such as external amplifiers, CD changers, and/or telephone/telematics (depending on the equipment). The gateway node represents the connection to CAN Comfort.

MOST switch

The MOST - switch - switch is part of the PCM2. It keeps the electrical MOST closed if no other MOST control unit is optically connected to the MOST. The MOST switch is opened when a light signal is received from the connected MOST control modules.

The following settings can be coded:

- MOST switch open.
- MOST switch closed.

Note!

- *When the PCM2 is replaced, the coding must be performed in accordance with the connected MOST control modules.*
- *When the 'Switch closed' parameter is set, the switch remains closed even in existing MOST control modules. Communication is then not possible.*

Navigation

The navigation module is designed as a module box, which can be inserted in the PCM2 as an option. After the insertion, an electronic switch is opened automatically and the module is integrated into the MOST ring.

Ring break diagnosis line

The ring break diagnosis line is an electrical lead, which, as a stub cable, connects the individual MOST control modules in the system with one another. The existing MOST control modules are checked at regular intervals during communication with the control modules via the electrical/optical MOST.

Drive links

Drive links of the PCM2 can be activated with this menu item. This allows the function of the drive links to be assessed very quickly.

The following drive links can be activated with the 9588 Porsche System Tester II:

- Display colour black
- Display colour "coloured bars"
- Display colour blue
- Display colour red
- Display colour green
- Display colour white

Note!

The activated drive link is automatically switched off after approximately 20 seconds.

Menu item	Function
♦ Display colour black	Using this menu item, the function Display colour black can be checked. ♦ 9588 Connect and start the Porsche System Tester II and switch on the ignition. ♦ Select '911 Turbo (996)' in the Vehicle type menu and confirm with the [>>] key. ♦ Select 'PCM2' in the control modules selection and confirm with the [>>] key. ♦ Select 'PCM2 MMI' in the 911 Turbo (996) function selection and confirm with the [>>] key. ♦ Select 'Drive links' in the PCM2 MMI menu and press the [>>] key. ♦ Select "Display colour black" in the PCM2-MMI Drive links menu with the [>] key and confirm with the [F8] key. ♦ The display must show the correct colour. Proceed in the same way with the following tests. ♦ Display colour "coloured bars". ♦ Display colour blue ♦ Display colour red ♦ Display colour green ♦ Display colour white

PCM2 control module (head unit)

The PCM2 control unit (head unit) includes the following components:

Internal:

PCM2 gateway

PCM2 Man Machine Interface (MMI)

Internal amplifier (optional, depending on the equipment)

Tuner

Single CD

Navigation (optional/insertion)

VOCS (voice control system) (optional/insertion)

Controller Area Network (CAN) Comfort

MOST switch

External:

External amplifier (optional, Harman or BOSE)

CD changer (CDC), (optional)

Telephone/telematics (optional)

The PCM2 consists of at least two but a maximum of four MOST nodes, (Gateway, MMI and Navigation and VOCS (optional)), which communicate with each other electronically via the MOST. Data is transferred outside of the PCM2 via the optical MOST.

Input signals

The following queries can be run using this menu item:

- Key code
- Increment steps

Note!

Deactivate the 'automatic traffic announcement' before performing the diagnosis on the PCM2. If this is not done, the diagnosis will abort (applies only to software version < 03).

Menu item	Function
♦ Key code	This menu item can be used to ♦ 9588 Connect and start the Porsche System Tester II and switch on the ignition. ♦ Select '911 Turbo (996)' in the Vehicle type menu and confirm with the [>>] key. ♦ Select 'PCM2' in the Control modules menu and confirm with the [>>] key. ♦ Select 'PCM2 MMI' in the 911 Turbo (996) function selection menu and confirm with the [>>] key. ♦ Select 'Input signals' in the 911 Turbo (996) menu and confirm with the [>>] key. ♦ Select "Key code" in the PCM2-MMI Input signals menu with the [>] key and confirm with the [>>] key. ♦ By operating the control buttons, the code of each key is output to the display if its function is correct.

Menu item	Function
♦ Increment steps	Using this menu item, the function of the volume and selection pointer rotary switch can be checked. ♦ 9588 Connect and start the Porsche System Tester II and switch on the ignition. ♦ Select '911 Turbo (996)' in the Vehicle type menu and confirm with the [>>] key. ♦ Select 'PCM' in the Control modules menu and confirm with the [>>] key. ♦ Select 'PCM2 MMI' in the 911 Turbo (996) function selection menu and confirm with the [>>] key. ♦ Select 'Input signals' in the 911 Turbo (996) menu and confirm with the [>>] key. ♦ Select "Increment steps" in the PCM2-MMI Input signals menu, mark with the [>] key and confirm with the [>>] key. ♦ To check, rotate the volume control or selection pointer. If function is correct, each change will be displayed on the 9588 Porsche System Tester II.

Single CD

The CD player is part of the PCM2. It is used to update the navigation system.

Voice control system (VOCS)

The VOCS is designed as a module box which can be pushed into the PCM2 (optional). After the insertion, an electronic switch is opened and the module is integrated into the MOST ring.

Telephone/telematics

The telephone/telematics feature is available as an option and is linked to the PCM2 via the optical waveguide.

Tuner

The tuner is part of the PCM2 (on the main board).

Unlock counter

Interruptions occur in the system if perfect communication is no longer possible. If the relevant threshold values are exceeded, an entry is recorded in the appropriate control module and the 'unlock counter' is incremented.

External amplifier

The external amplifier (Harman or BOSE) is available as an optional feature and is linked to the PCM2 via the optical waveguide.

Internal amplifier

The internal amplifier is part of the PCM2 (installed on the main board).

Wake-up function

In an idle state, all control modules that are connected to the MOST are in sleep mode. When the PCM2 is switched on, a light is switched on via the MMI. It is reinforced and passed on by the MOST control modules that are connected.

Fault overview - MMI

Fault code	Fault text	Fault effect
8002	Internal communication error	Failure
8003	Operating buttons are jammed	Can only be operated under certain conditions
8004	Single CD drive overheating	Can only be operated under certain conditions
8005	Audio CD cannot be read	Failure
8006	Internal fault in single CD drive	Failure
8007	Open circuit in diagnosis distribution line	Can only be operated under certain conditions
8009	MOST fault, optical/electrical	Failure
800C	Fault during software update using single CD	Failure

8002 PCM2 - MMI

Internal communication error

Diagnostic conditions

- Ignition on.
- PCM2 on.

Possible cause of fault

- EEPROM fault

Note!

-
-
-
-
-

Affected pins

-

Diagnosis/troubleshooting on the PCM2

Work instruction			Display OK	If not OK
1	Read out PCM2 fault memory	♦ Connect the Porsche System Tester II No. 9588 to the diagnostic socket, start it and switch on the ignition ♦ Select '911 Turbo (996)' in the Vehicle type menu and confirm with the [>>] key ♦ Select 'PCM' in the control modules selection and confirm with the [>>] key ♦ Select 'PCM2 MMI' in the PCM2 function selection and confirm with the [>>] key ♦ Start 'Fault memory' in the menu using the [>>] key ♦ Read out fault memory ♦ Erase fault memory ♦ Remove ignition key and switch on ignition again ♦ Read out fault memory ♦ Extract ambient data, press the [>>] key	The fault is remedied → End	⇒ Step 2
2	Replace PCM2		The fault is remedied → End	

8003 PCM2 - MMI

Operating buttons are jammed

Diagnostic conditions

- Ignition on.
- PCM2 on.
- Manual actuation

Note!

≥

Possible cause of fault

- Internal short circuit

Affected pins

-

Diagnosis/troubleshooting

Work instruction			Display OK	If not OK
1	Read out the PCM MMI fault memory	♦ Connect the Porsche System Tester II No. 9588 to the diagnostic socket, start it and switch on the ignition ♦ Select '911 Turbo (996)' in the Vehicle type menu and confirm with the [>>] key ♦ Select 'PCM' in the control modules selection and confirm with the [>>] key ♦ Select 'PCM2 MMI' in the PCM2 function selection and confirm with the [>>] key ♦ Start 'Fault memory' in the menu using the [>>] key ♦ Read out fault memory ♦ Erase fault memory ♦ Remove ignition key and switch on ignition again ♦ Read out fault memory ♦ Extract ambient data, press the [>>] key	→ End	Fault code is displayed ⇒ Step 2
2	Replace PCM2		→ End	

8004 PCM2 - MMI

Single CD drive overheating

- Battery temperature too high

Diagnostic conditions

- Ignition on.
- PCM2 on.

Possible cause of fault

- Exterior and interior temperature very high
- Operation of heater

Affected pins

-

Diagnosis/troubleshooting

Work instruction			Display OK	If not OK
1	Read out PCM2 fault memory	♦ Connect the Porsche System Tester II No. 9588 to the diagnostic socket, start it and switch on the ignition ♦ Select '911 Turbo (996)' in the Vehicle type menu and confirm with the [>>] key ♦ Select 'PCM' in the control modules selection and confirm with the [>>] key ♦ Select 'PCM2 MMI' in the PCM2 function selection and confirm with the [>>] key ♦ Start 'Fault memory' in the menu using the [>>] key ♦ Read out fault memory ♦ Erase fault memory ♦ Remove ignition key and switch on ignition again ♦ Read out fault memory ♦ Extract ambient data, press the [>>] key	→ End	Fault code is displayed ⇒ Step 2
2	Replace PCM2		→ End	

8005 PCM2 - MMI

CD cannot be read

Diagnostic conditions

- Ignition on
- PCM2 ON

Possible cause of fault

- CD damaged or wrongly inserted.
- CD player faulty

Affected pin

-

Diagnosis/troubleshooting

Work instruction			Display OK	If not OK
1	Visual inspection	♦ Check CD for damage and the position of the data side. ♦ Replace CD.	→ End	⇒ Step 2
2	Reading out PCM2 fault memory	♦ Connect Porsche System Tester II No. 9588 to the diagnostic socket; start and switch on the ignition. ♦ Select '911 (996)' in the vehicle type menu and confirm with the [→|] key. ♦ Select 'PCM' in the control modules selection and confirm with the [>>] key. ♦ Select 'PCM2/CDR23' in the control modules selection and confirm with the [>>] key. ♦ Select 'PCM2-MMI' in the PCM2 function selection and confirm with the [>>] key. ♦ In the 'fault memory' menu, click the [> >] key. ♦ Read out fault memory. ♦ Erase fault memory. ♦ Remove ignition key and switch on ignition again. ♦ Read out fault memory. ♦ Extract ambient data, press the [>>] key.	The fault is remedied. → End	Fault code is still displayed. ⇒ Step 2
3	Replacing PCM2		The fault is remedied. → End	

8006 PCM2 - MMI

Internal fault in single CD drive

Diagnostic conditions

- Ignition on.
- PCM2 on.

Possible cause of fault

- CD damaged or inserted incorrectly

Affected pin

-

Diagnosis/troubleshooting

Work instruction			Display OK	If not OK
1	Visual inspection	♦ Check audio CD for damage and check position of data-side of CD ♦ Replace the CD	→ End	⇒ Step 2

Work instruction			Display OK	If not OK
2	Read out PCM2 fault memory	♦ Connect the Porsche System Tester II No. 9588 to the diagnostic socket, start it and switch on the ignition ♦ Select '911 Turbo (996)' in the Vehicle type menu and confirm with the [>>] key ♦ Select 'PCM' in the control modules selection and confirm with the [>>] key ♦ Select 'PCM2 MMI' in the PCM2 function selection and confirm with the [>>] key ♦ Start 'Fault memory' in the menu using the [>>] key ♦ Read out fault memory ♦ Erase fault memory ♦ Remove ignition key and switch on ignition again ♦ Read out fault memory ♦ Extract ambient data, press the [>>] key	The fault is remedied → End	Fault code is still displayed ⇒ Step 2
3	Replace PCM2		The fault is remedied → End	

□□□

□□ □□□□

□□□

□□□□□□□□□□□□□□□			□□□□□□□□□	□□□□□□□□
□	□□□□□□□□□□□□□□□

□□□

□□ □□□□

□□□

□□□□□□□□□□□□□□□□			□□□□□□□□□	□□□□□□□□
		□□□□□□□□ ◆ □□□□□□□□□□□□□□□□

800C PCM2 - MMI

Fault during software update using single CD

Diagnostic conditions

- Ignition on.
- PCM2 on.

Possible cause of fault

- Incorrect/incompatible software version
- Third-party software components

Note!

-
-
-
-
-

Affected pin

-

Diagnosis/troubleshooting

Work instruction			Display OK	If not OK
1	Read out PCM2 fault memory	♦ Connect the Porsche System Tester II No. 9588 to the diagnostic socket, start it and switch on the ignition ♦ Select '911 Turbo (996)' in the Vehicle type menu and confirm with the [>>] key ♦ Select 'PCM' in the control modules selection and confirm with the [>>] key ♦ Select 'PCM2 MMI' in the PCM2 function selection and confirm with the [>>] key ♦ Start 'Fault memory' in the menu using the [>>] key ♦ Read out fault memory ♦ Erase fault memory ♦ Remove ignition key and switch on ignition again ♦ Read out fault memory ♦ Extract ambient data, press the [>>] key	The fault is remedied → End	Fault code is still displayed ⇒ Step 2
2	Replace PCM2		→ End	

PCM2/CDR23 (External Harman amplifier)

Introduction – external Harman amplifier

The manual contains the diagnosis for the following system:

External Harman amplifier

General instructions/safety instructions

The following points must be observed during vehicle diagnosis:

- After the battery is connected, volatile memories must be reprogrammed. In the case of radio coding and tuning, the customer must be informed of decoding and the deleted tuner memory.
- After the battery has been connected, the instructions in the assembly ⇒ 9; Rep. Gr. - ; Work instructions after disconnecting the battery must be observed.
- Deactivate the 'automatic traffic announcement' before beginning the diagnosis on the PCM2. If this is not done, the system will crash (applies only to version < 03).
- When working on the optical waveguide, please observe the instructions in assembly ⇒ 9; Rep. Gr. 9768; Optical waveguide - MOST bus.
- After troubleshooting or repairs, erase the fault memory with the 9588 Porsche System Tester II and carry out a test drive.
- After the test drive, read out the fault memory with the 9588 Porsche System Tester II again.

Danger!

Danger of injury through triggering of driver's airbag

- ***9588 Never hang the Porsche System Tester II over the steering wheel.***

Caution!

Danger of damage due to improper handling of the battery and the control module connectors!

- ***Never disconnect battery with engine running.***

- ***Never start engine without securely connected battery.***
- ***Never pull off or push on plug connections for the control modules or other electronic components when the ignition is switched on.***

General information on the fault memory

Fault code setting conditions

Fault codes can be set in several circumstances, e.g.:

- battery disconnected.
- plug connections disconnected.
- power failure.

In these circumstances, no fault is present in the system and the fault memory must be erased.

Display '*' in the menu 'Control modules' and menu 'PCM2 MOST component check'.

Different required and actual installed components lists

When the 'automatic control module search' is complete, the following display '*' appears in front of the control module description 'PCM2' in the 'Control modules' menu, as well as in the 'PCM2 MMI function selection' in front of the entry 'MOST required installed components list' if the 9588 Porsche System Tester II establishes a difference between the required and actual installed components list and there is no fault code in one of the fault memories of the MOST control modules.

If there is a fault code present in one of the MOST control modules, the display '*' is only shown in the 'PCM2 MMI function selection' in front of the line 'MOST required installed components list'.

If there is a display in the menu Control module, an existing fault code has priority and a '#' is set.

Fault memory Info key F8

In order to be able to assess the fault exactly, the fault memory Info key F8 must be pressed. This information should be saved using the Save key F4 and printed out. If a fault code is stored with "not present" status and no other problems are present, then the fault memory must be erased.

Open circuit - short to ground / voltage short / version; vehicle parameters / counter	
Fault counter	When a fault first occurs, a fault entry is made in the fault memory and the counter is simultaneously set to 50. If a fault is present, the counter is incremented by 1 for each "ignition on". The maximum count is 255. The counter is decremented if the fault is no longer present. The fault memory is automatically erased when the counter reaches 0. If the error occurs again when the counter is between 1 and 49, the counter is reset to 50.
Lock status of MOST ring	The value indicates the status of the MOST ring when the fault occurred. ♦ lock ♦ unlock
Supply voltage	The value indicates the voltage at the time the fault occurred.
Supply voltage fault type	The display shows which fault type has occurred: ♦ no fault type ♦ not present

Vehicle hand-over

The PCM2 is converted to delivery mode (low-current mode) in production. As known from other systems (alarm system, CDR23, instrument cluster, roll-over bar), the PCM2 must be activated with the 9588 Porsche System Tester II.

1. 9588 Connect and start the Porsche System Tester II and switch on the ignition.
2. Select the menu item 'Special functions' and press the [>>] key.
3. Select the menu item 'Vehicle hand-over' and press the [>>] key.
4. Follow the instructions of the 9588 Porsche System Tester II.

Production mode

If the MOST control module is set to Production mode on, it is in low-current mode. The display remains black, the control module cannot function.

1. 9588 Connect and start the Porsche System Tester II and switch on the ignition.
2. Select '911 Turbo (996)' in the Vehicle type menu and confirm with the [>>] key.

3. Select 'PCM2' in the control modules selection and confirm with the [>>] key.
4. Select 'PCM2 GW' in the control modules selection and confirm with the [>>] key.
5. Select 'Coding' in the PCM2 GW function selection and confirm with the [>>] key.
6. Select 'Production mode' in the PCM2 GW coding and confirm with the [>>] key.
7. Select 'Production mode off' menu and code with the [F8] key.

The following options can be coded:

- Production mode off
- Production mode on

Replacing CDR23 control modules

The PCM2 is converted to delivery mode (low-current mode) in production. As known from other systems (alarm system, instrument cluster, roll-over bar), the PCM2 must be activated with the 9588 Porsche System Tester II.

1. 9588 Connect and start the Porsche System Tester II and switch on the ignition.
2. Select the menu item 'Special functions' and press the [>>] key.
3. Select the menu item 'Vehicle hand-over' and press the [>>] key.
4. Follow the instructions of the 9588 Porsche System Tester II.

Control module replacement - PCM2

The PCM2 is supplied in 'production mode on' in new vehicles and as a spare part. Before putting the PCM2 into operation, the 'Production mode on' must be set to 'Production mode off' in the Coding menu when selecting the function of the PCM2-GW, and the vehicle must be locked and secure. Afterwards, PCM2 is functional. The procedure is explained in detail under 'Production mode'.

Tools - external Harman amplifier

⚠ □□□□□□□

Danger of injury through triggering of driver's airbag

- ***Never hang the Porsche System Tester II No. 9588 over the steering wheel.***
- ***Always place tools and special tools outside the functioning range of all airbags!***

ℹ □□□□□

□□□□□□□□□□□□□□□□

□□□□□□□□ □ □□□□□□□□□□□□□□□□□□□□□□□□ □□□□□

►

97

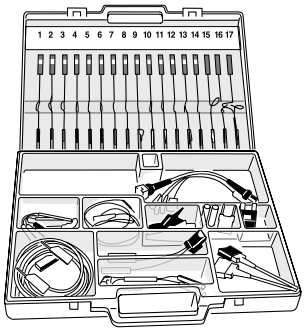

9684 000 721 968 40

□□□□□□□□□□□□□□□□□□□

Component arrangement - external Harman amplifier

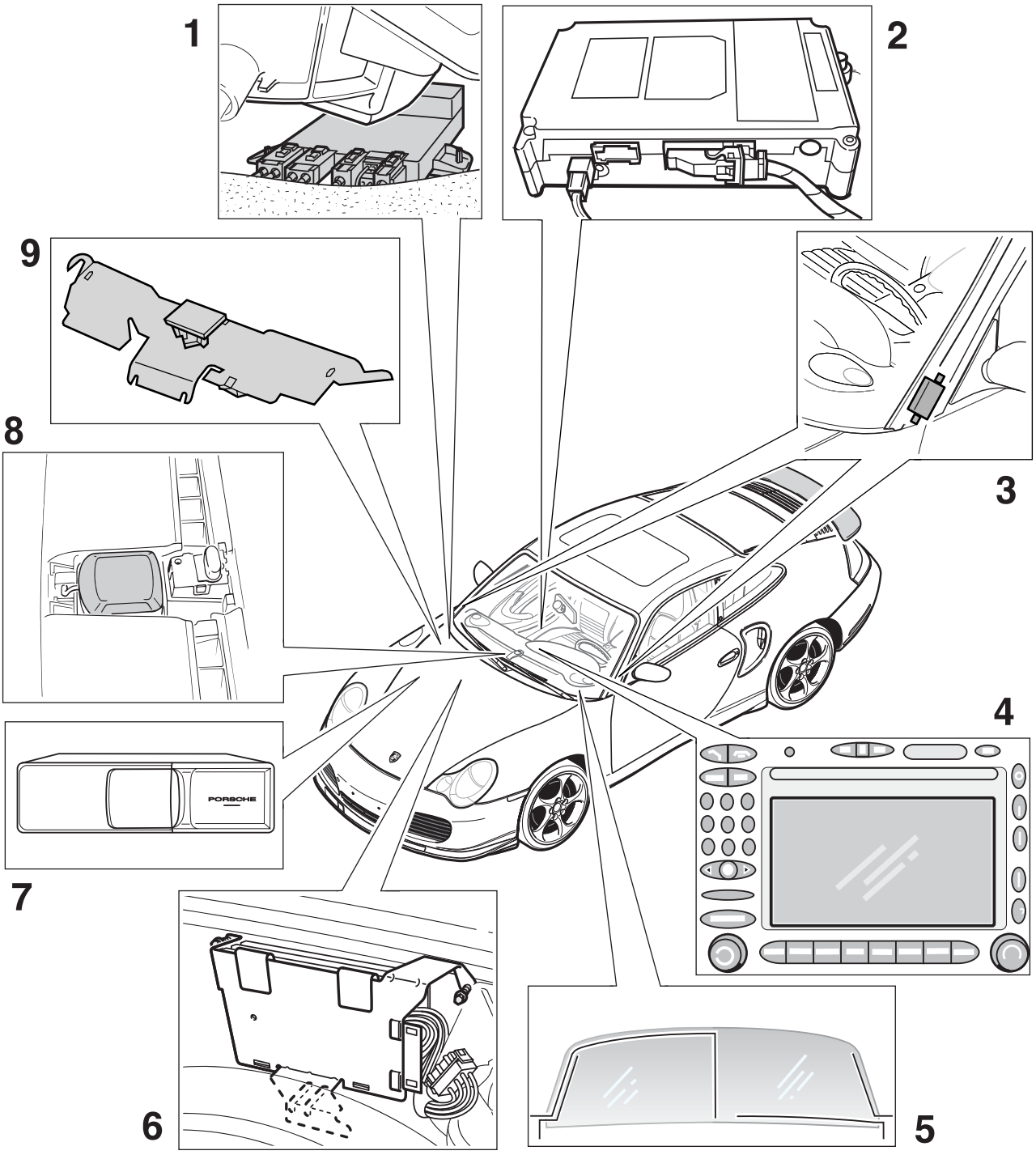

1 - Diversity antenna control unit.

2 - Telephone/telematics control unit

3 - Antenna amplifiers left and right.

4 - PCM2.

5 - Windscreen antenna

6 - External amplifier (option Harman/BOSE).

7 - CD changer

8 - GPS antenna

9 - GSM antenna

Loudspeaker basic system

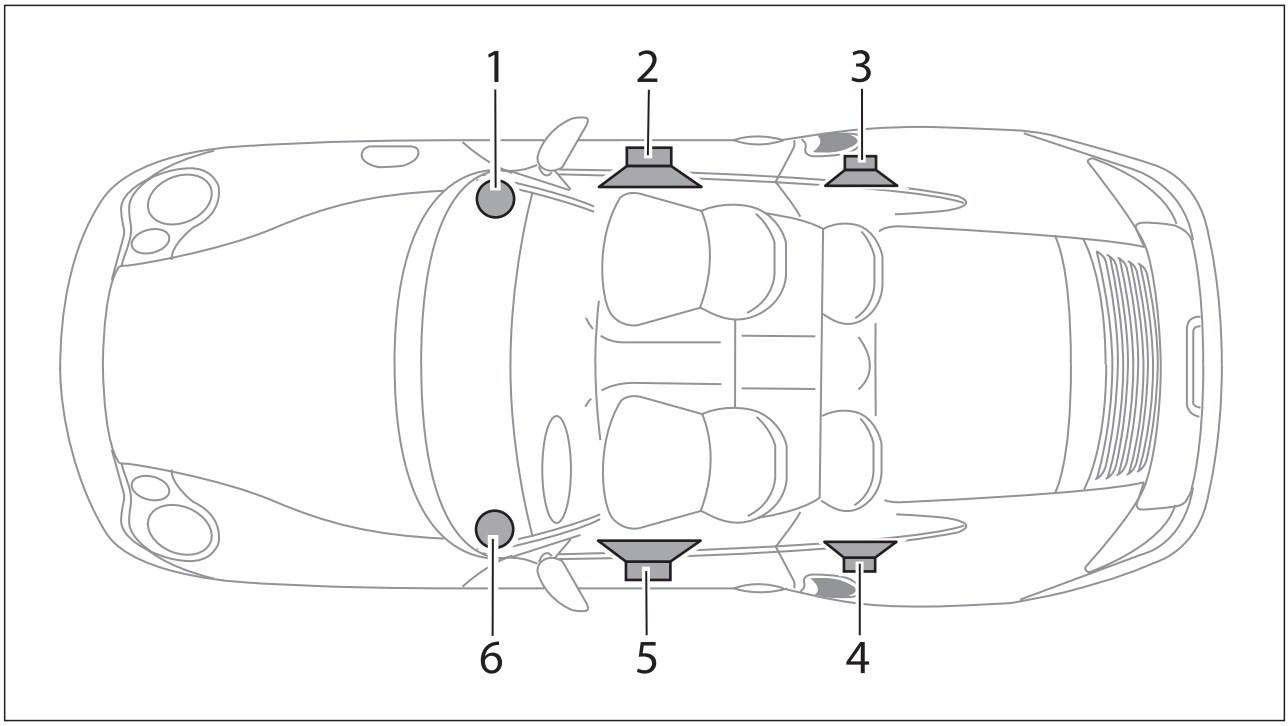

1 - Loudspeaker, front right.

2 - Loudspeaker, door right.

3 - Loudspeaker, rear door right.

4 - Loudspeaker, rear door left.

5 - Loudspeaker, front door left.

6 - Loudspeaker, front left.

Loudspeaker sound package

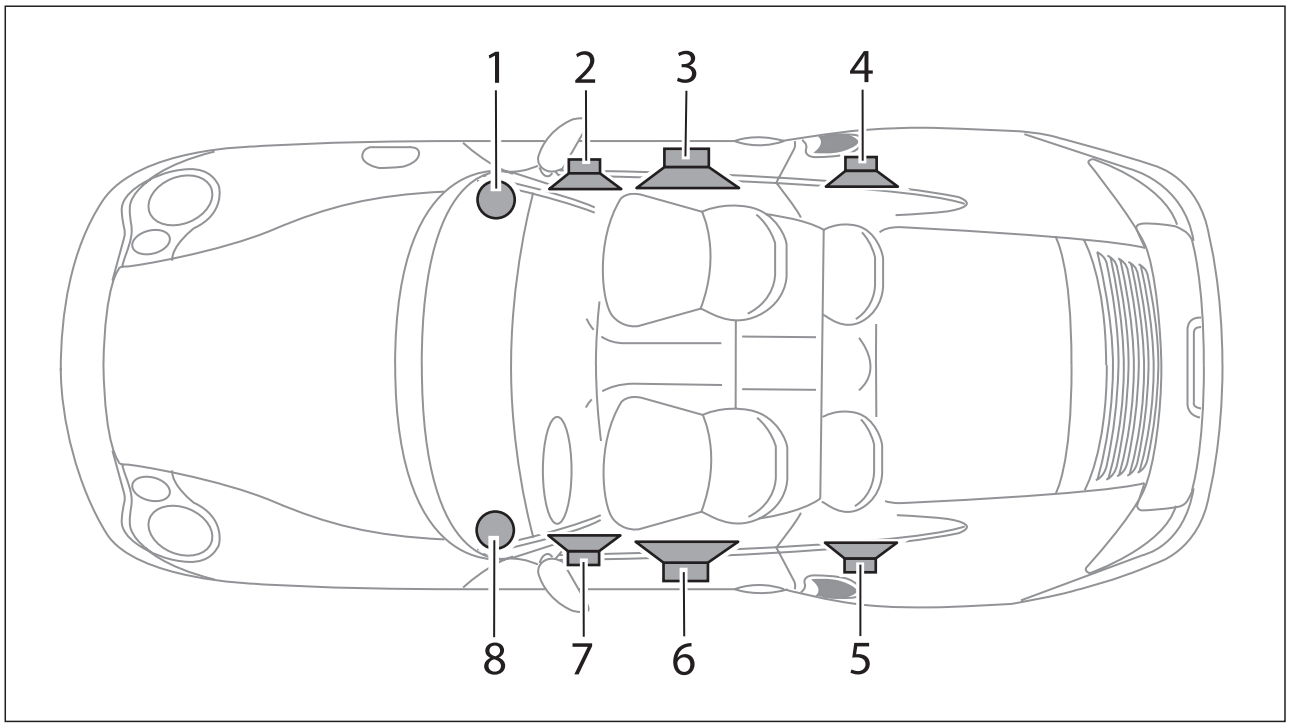

1 - High-pitch loudspeaker, dashboard right.

2 - Middle-pitch loudspeaker, front door right.

3 - Low-pitch loudspeaker, front door right.

4 - Loudspeaker, rear door right.

5 - Loudspeaker, rear door left.

6 - Low-pitch loudspeaker, front door left.

7 - Middle-pitch loudspeaker, front door left.

8 - High-pitch loudspeaker, dashboard left.

High-End loudspeaker

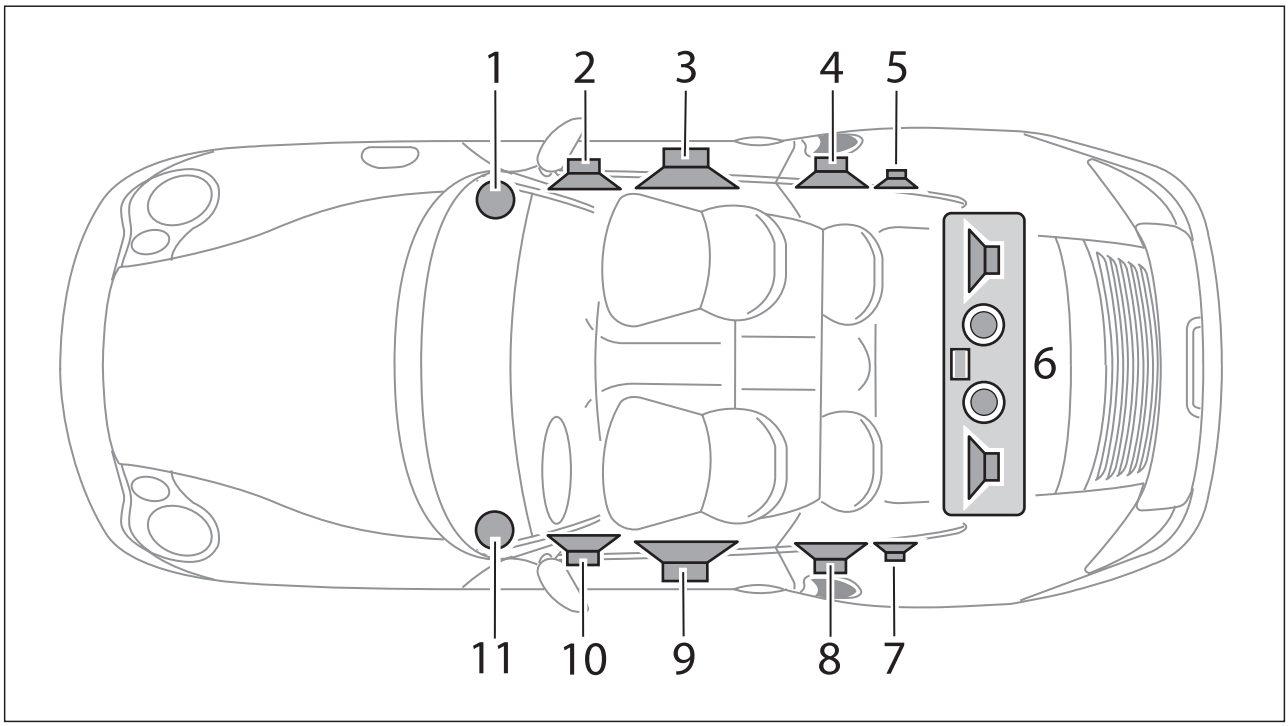

1 - High-pitch loudspeaker, dashboard right.
2 - Middle-pitch loudspeaker, front door right.
3 - Low-pitch loudspeaker, front door right.
4 - Middle-pitch loudspeaker, rear door right.
5 - High-pitch loudspeaker, rear door right.
6 - Subwoofer
7 - High-pitch loudspeaker, rear door left.
8 - Middle-pitch loudspeaker, rear door left.
9 - Low-pitch loudspeaker, door left.
10 - Middle-pitch loudspeaker, door left.
11 - High-pitch loudspeaker, dashboard left.

Connector pin assignment - external Harman amplifier

Connector assignment

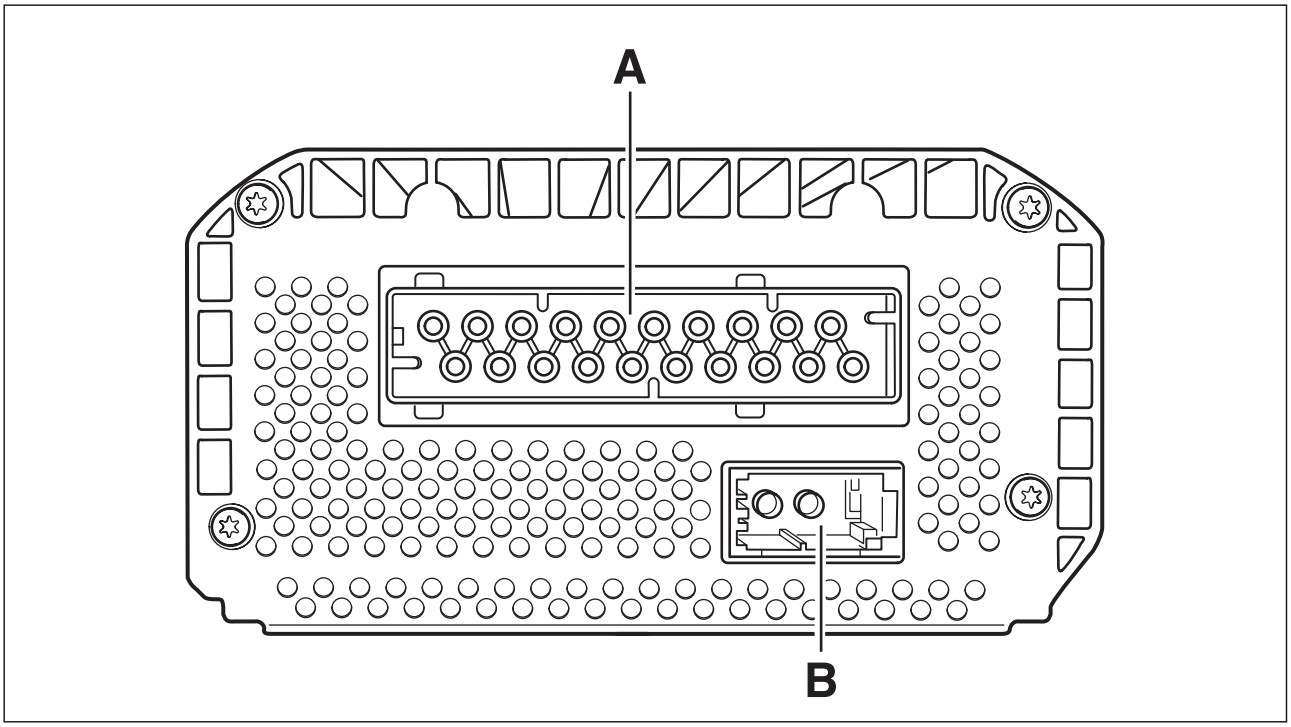

Connector A

Pin	Designation	Pin	Designation
A 1	Diagnosis	A 11	Not used
A 2	Not used	A 12	Not used
A 3	Not used	A 13	Not used
A 4	Not used	A 14	Dashboard loudspeaker FL +
A 5	Dashboard loudspeaker FL -	A 15	Dashboard loudspeaker FL -
A 6	Dashboard loudspeaker FR +	A 16	Door loudspeaker FL +
A 7	Door loudspeaker FL -	A 17	Door loudspeaker FR +
A 8	Door loudspeaker FR -	A 18	Not used
A 9	Terminal 30	A 19	Not used
A 10	Terminal 31	A 20	Not used

Connector C

Pin	Designation	Pin	Designation
C1	Optical waveguide	C 2	Optical waveguide

Control module function - external Harman amplifier

Terminating resistors on the CAN

Terminating resistors are fitted to each end of the wiring to prevent reflection on the wiring. These terminating resistors are integrated into each control module. The interconnection prevents the resistors from being measured with the ohmmeter from the outside.

Audio tests

There is a manual and an automatic audio test for testing the loudspeaker system.

Manual single selection

- front left, test frequency 1 kHz
- front right, test frequency 1 kHz
- rear left, test frequency 1 kHz
- rear right, test frequency 1 kHz
- left door speaker, test frequency 1 kHz
- right door speaker, test frequency 1 kHz

Menu item	Function
♦ Manual single selection	This menu item can be used to, ♦ Connect and start the Porsche System Tester II No. 9588 and switch on the ignition. ♦ Select '911 Turbo (996)' in the Vehicle type menu and confirm with the [>>] key. ♦ Select 'PCM' in the Control module menu and confirm with the [>>] key. ♦ Select 'External Harman amplifier' in the 911 Turbo (996) function selection menu and confirm with the [>>] key. ♦ Select "Audio tests" in the menu and confirm with the [>>] key. ♦ Select 'Manual single selection' in the Audio tests menu and confirm with the [>>] key. ♦ Select "911 Turbo (996)" in the menu and code with the [F8] key.

[F8] key = Start; [F5] key = Raise volume; [F6] key = Lower volume.

Automatic test

The individual loudspeakers are controlled automatically by the Porsche System Tester II No. 9588.

Menu item	Function
♦ Automatic test	This menu item can be used to, ♦ Connect and start the Porsche System Tester II No. 9588 and switch on the ignition. ♦ Select '911 Turbo (996)' in the Vehicle type menu and confirm with the [>>] key. ♦ Select 'PCM' in the Control module menu and confirm with the [>>] key. ♦ Select 'External Harman amplifier' in the 911 Turbo (996) function selection menu and confirm with the [>>] key. ♦ Select "Audio tests" in the menu and confirm with the [>>] key. ♦ Select 'Automatic test' in the Audio tests menu and confirm with the [>>] key. ♦ Select "911 Turbo (996)" in the menu and code with the [F8] key.

CAN comfort

Communication between the Porsche System Tester II No. 9588 and the MOST control modules only takes place via the K lead to the instrument cluster. The data is transferred from the instrument cluster gateway to the MOST control modules, via CAN Comfort to the PCM2 gateway, via the electrical MOST in the PCM2 and via the optical MOST outside of the PCM2.

CD changer (CDC)

The CDC is availabe as an optional feature and is linked to the PCM2 via the optical waveguide.

Coding table

Coding type	PCM2 GW	PCM2 MMI	CDR23	Navigation	Harman amplifier	BOSE amplifier	CD changer	Telephone
ABS pulse number				X				
Call automatically accepted		X						
Display format		X		X				
External handset								X
Date		X		X				
Units	X	X		X				

Coding type	PCM2 GW	PCM2 MMI	CDR23	Navigation	Harman amplifier	BOSE amplifier	CD changer	Telephone
Vehicle type vehicle coding	X	X	X	X	X	X		
Vehicle version vehicle coding	X	X	X	X	X	X		
Right/left-hand drive vehicle coding	X	X	X	X	X	X		
Wheel size				X				
GAL (NLB)		X	X					
Height/width in per cent				X				
Air conditioning	X	X		X				
Country coding	X	X		X				
Main set-up menu		X						
MOST switch	x							
MOST required installed components list		X	X					
PCM2 code	X	X	X	X				
Porsche Assistance, international designation		X						
Porsche Assistance, international number		X						
Porsche Assistance menu		X						
Porsche Assistance, national designation		X						
Porsche Assistance, national number		X						
Production mode	X	X	X					
Tyre width				X				
Tyre condition				X				
Summer/winter time		X		X				
Time-out		X						
Tuner parameters	X		X					

Coding type	PCM2 GW	PCM2 MMI	CDR23	Naviga-tion	Harman ampli-fier	BOSE amplifier	CD changer	Tele-phone
User data			X					
Traffic broadcast loudspeaker boost		X	X					
Time		X		X				
Time zone		X		X				

Coding

Using this menu item, you can code the Harman amplifier as required for the vehicle.

Menu item	Function
♦ Vehicle type vehicle coding	Under this menu item, the external Harman amplifier corresponding to the vehicle type can be coded. ♦ Connect and start the Porsche System Tester II No. 9588 and switch on the ignition. ♦ Select '911 Turbo (996)' in the Vehicle type menu and confirm with the [>>] key. ♦ Select 'PCM' in the Control module menu and confirm with the [>>] key. ♦ Select 'External Harman amplifier' in the 911 Turbo (996) function selection menu and confirm with the [>>] key. ♦ Select "Vehicle coding" in the menu and confirm with the [>>] key. ♦ Select 'Vehicle type vehicle coding' in the Coding menu and confirm with the [>>] key. ♦ Select "911 Turbo (996)" in the menu and code with the [F8] key.

Menu item	Function
♦ Vehicle version vehicle coding	Under this menu item, the external Harman amplifier corresponding to the vehicle version can be coded. ♦ Connect and start the Porsche System Tester II No. 9588 and switch on the ignition. ♦ Select '911 Turbo (996)' in the Vehicle type menu and confirm with the [>>] key. ♦ Select 'PCM' in the Control module menu and confirm with the [>>] key. ♦ Select 'External Harman amplifier' in the 911 Turbo (996) function selection menu and confirm with the [>>] key. ♦ Select "Vehicle version" in the menu and confirm with the [>>] key. ♦ Select 'Vehicle type vehicle coding' in the Coding menu and confirm with the [>>] key. ♦ Select "911 Turbo (996)" in the menu and code with the [F8] key.
♦ Right/left-hand drive vehicle coding	Under this menu item, the external Harman amplifier corresponding to the vehicle configuration can be coded. ♦ Connect and start the Porsche System Tester II No. 9588 and switch on the ignition. ♦ Select '911 Turbo (996)' in the Vehicle type menu and confirm with the [>>] key. ♦ Select 'PCM' in the Control module menu and confirm with the [>>] key. ♦ Select 'External Harman amplifier' in the 911 Turbo (996) function selection menu and confirm with the [>>] key. ♦ Select "Vehicle coding" in the menu and confirm with the [>>] key. ♦ Select 'Right/left-hand drive vehicle coding' in the Coding menu and confirm with the [>>] key. ♦ Select "Right or left-hand drive" in the menu corresponding to the vehicle equipment and code with the [F8] key.

Data transfer fault

If faults are detected when the data is decoded, this is known as a data transfer fault. The faults can arise when the data is encoded, when the data is transferred through an input level that is optically too low or when the data is decoded. A fault entry is not recorded.

Function of the components

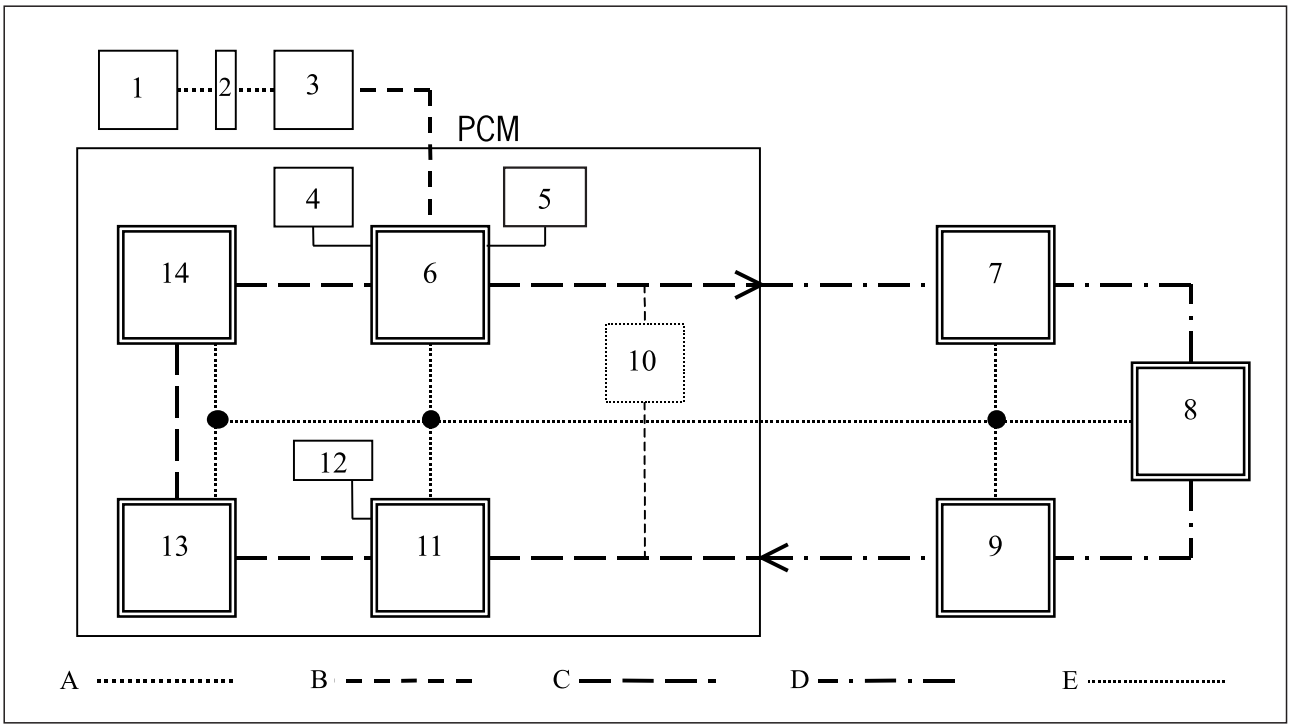

A - K lead
B - CAN comfort
C - Electrical MOST (internal)
D - Optical MOST (external)
E - MOST diagnosis lead
1 - Porsche System Tester II No. 9588
2 - Diagnostic box
3 - Instrument cluster (gateway)
4 - PCM2 (internal amplifier)
5 - PCM2 (tuner)
6 - PCM2 (gateway) (MOST nodes)
7 - External amplifier (MOST nodes)
8 - CDC (CD changer) (MOST nodes)
9 - Telephone/telematics (MOST nodes)
10 - PCM2 (MOST switch)
11 - MMI (Man Machine Interface) (MOST nodes)
12 - PCM2 single CD
13 - Navigation (MOST nodes)
14 - VOCS (voice control system) (MOST nodes)

Note!

-
-

Gateway

The gateway is integrated in the PCM2/CDR23. Together with the MMI, it is a fixed component of each PCM2 (omitted for CDR23). It provides a connection to CAN Comfort via its nodes. Diagnostic and useful data is exchanged with the CAN via these nodes.

It creates links to the following systems:

- CAN comfort
- Media Oriented Systems Transport (MOST), internal (electrical)
- Voice control system (VOCS) (optional/insertion)
- Navigation (optional/insertion)
- Man Machine Interface (MMI)
- Single CD
- Media Oriented Systems Transport (MOST), external bus (optical)
- Amplifier optional (Harman or BOSE)
- CD changer
- Telephone/telematics

Identification

The diagnosis software number and the part numbers for the PCM2 can be read out under this menu item.

1. Connect and start the Porsche System Tester II No. 9588 and switch on the ignition.
2. Select vehicle type 911 Turbo (996) and the PCM2 control module and press the [>>] key.
3. Select the "Identification" menu item and press the [>>] key.
4. "Diagnosis software number; PCM2 parts number" appears on the display.

Actual values

It is possible to read out the unlock counter under the 'Actual values' menu item.

Menu item	Function
♦ Supply voltage	Using this menu item, you can determine the supply voltage. ♦ Connect and start the Porsche System Tester II No. 9588 and switch on the ignition. ♦ Select '911 Turbo (996)' in the Vehicle type menu and confirm with the [>>] key. ♦ Select 'PCM' in the Control module menu and confirm with the [>>] key. ♦ Select 'External Harman amplifier' in the 911 Turbo (996) function selection menu and confirm with the [>>] key. ♦ Select 'Actual values' in the 911 Turbo (996) menu and confirm with the [>>] key. ♦ Select [>] in the 'Supply voltage' menu and mark with the [>] key. Confirm using the [>>] key. ♦ Read out the value from the display field.
♦ Vehicle speed	Under this menu item, it is possible to check the electrical and optical MOST during troubleshooting. ♦ Connect and start the Porsche System Tester II No. 9588 and switch on the ignition. ♦ Select '911 Turbo (996)' in the Vehicle type menu and confirm with the [>>] key. ♦ Select 'PCM' in the Control module menu and confirm with the [>>] key. ♦ Select 'External Harman amplifier' in the 911 Turbo (996) function selection menu and confirm with the [>>] key. ♦ Select 'Actual values' in the External Harman amplifier function selection menu and confirm with the [>>] key. ♦ Select [>] in the 'Speed' menu and mark with the [>] key. Confirm using the [>>] key. ♦ Read out values from the display field.

Menu item	Function
♦ Unlock counter	Under this menu item, it is possible to check the electrical and optical MOST during troubleshooting. ♦ Connect and start the Porsche System Tester II No. 9588 and switch on the ignition. ♦ Select vehicle type 911 Turbo (996) and the PCM2 control module and press the [>>] key. ♦ Select 'Actual values' in the 911 Turbo (996) menu item and confirm with the [>>] key. ♦ Select "Unlock counter" in the Harman amplifier menu item using the [>] key and confirm with the [>>] key. ♦ Read out values from the display field.
♦ Transmission errors	Under this menu item, it is possible to check the electrical and optical MOST during troubleshooting. ♦ Connect and start the Porsche System Tester II No. 9588 and switch on the ignition. ♦ Select '911 Turbo (996)' in the Vehicle type menu and confirm with the [>>] key. ♦ Select 'PCM2' in the Control module menu and confirm with the [>>] key. ♦ Select 'External Harman amplifier' in the 911 Turbo (996) function selection menu and confirm with the [>>] key. ♦ Select the actual values menu item and confirm with the [>>] key. ♦ Select in the 'Unlock counter' menu using the [>] key and confirm with the [>>] key. ♦ Read out values from the display field.

Lock/unlock

A lock occurs when the signal sent from the MMI via the MOST optical/electrical is understood and answered by the connected MOST control modules. This applies a correct optical MOST signal. The lock is maintained until the signal is no longer detectable for a longer period of time (several µseconds) 'unlock'.

Man Machine Interface (MMI)

The MMI is part of the PCM2 (on the mainboard). It carries out the diagnostics of the ring break diagnosis line (stub cable) and the diagnostics of the optical distribution line.

Navigation

The navigation module is designed as a module box, which can be inserted in the PCM2 as an option. After the insertion, an electronic

switch is opened automatically and the module is integrated into the MOST ring.

MOST actual and required installed components lists

All MOST control modules that are connected to the PCM2 are entered via diagnostic tester in the 'required installed components list'. Only the MOST control units recorded in the MOST required installed components list are activated. An 'actual installed components list' of detected devices is written and saved when the PCM2 is started.

MOST - optical/electrical

MOST signals are transferred electrically within the PCM2CDR23 and optically outside of the PCM2/CDR23. Internally, the PCM2 consists of at least 2 nodes (GW and MMI), which are installed in the device and can also be expanded to four nodes by adding the navigation and VOCS nodes. Internally, the CDR23 consists of one node (GW) which is installed in the CDR23.

The data is transferred outside of the PCM2 via the optical waveguide, which creates a connection to the nodes in the external MOST control modules such as external amplifiers and/or telephone/telematics (depending on the equipment). The data is transferred outside of the CDR23 via the optical waveguide, which creates a connection to the nodes in the external MOST control modules such as external amplifiers and/or CD changers (depending on the equipment). The gateway node represents the connection to CAN Comfort.

MOST switch

The MOST - switch - switch is part of the PCM2. It keeps the electrical MOST closed if no other MOST control module is optically connected to the MOST. The MOST switch is opened when a light signal is received from the connected MOST control modules.

The following settings can be coded:

- MOST switch open.
- MOST switch closed.

Note!

-
-

Ring break diagnosis line

The diagnosis distribution line is an electrical lead, which, as a stub cable, connects the individual MOST control modules in the system with one another. The existing MOST control modules are checked at regular intervals during communication with the control modules via the electrical/optical MOST.

Input signals

The following queries can be run using this menu item:

- 3 dB loss

Note!

Menu item	Function
♦ 3 dB loss	Under this menu item, it is possible to check the optical MOST during troubleshooting. ♦ Connect and start the Porsche System Tester II No. 9588 and switch on the ignition. ♦ Select vehicle type 911 (996) and the PCM2-GW control module and press the [>>] key. ♦ Select the Input signals menu item and press the [>>] key. ♦ Select the "3 dB loss" menu item using the [>] key and press the [>>] key. ♦ Read out values from the display field.

Single CD

The CD player is part of the PCM2. It is used to update the navigation system.

Drive links

Drive links of the PCM2 can be activated with this menu item. This allows the function of the drive links to be assessed very quickly.

The following drive links can be activated with the Porsche System Tester II No. 9588:

- 3 dB loss
- Switching on the front left channel FL
- Switching off the front left channel FL
- Switching on the front right channel FR
- Switching off the front right channel FR
- Switching on the rear left and right channel RL + RR
- Switching off the rear left and right channel RL + RR
- Switching on the left subwoofer channel L
- Switching off the left subwoofer channel L
- Switching on the right subwoofer channel R
- Switching off the right subwoofer channel R
- Volume - minimum value
- Volume - centre position
- Volume - maximum value
- Mute off
- Mute on

Note!

PCM2 control module (head unit)

The PCM2 control module (head unit) includes the following components:

Internal:

PCM2 gateway

PCM2 Man Machine Interface (MMI)

Internal amplifier (optional, depending on the equipment)

Tuner

Single CD

Navigation (optional/insertion)

VOCS (voice control system) (optional/insertion)

Controller Area Network (CAN) Comfort

MOST switch

External:

External amplifier (optional, Harman or BOSE)

Telephone/telematics (optional)

CD changer (CDC), (optional)

The PCM2 consists of at least two but a maximum of four MOST nodes, (Gateway, MMI and Navigation and VOCS (optional)), which communicate with each other via the electronic MOST. Data is transferred outside of the PCM2 via the optical MOST.

Telephone/telematics

The telephone/telematics feature is availabe as an option and is linked to the PCM2 via the optical waveguide.

Tuner

The tuner is part of the PCM2 (on the main board).

Unlock counter

Interruptions occur in the system if perfect communication is no longer possible. If the relevant threshhold values are exceeded, an entry is recorded in the appropriate control module and the 'unlock counter' is incremented.

External amplifier

The external amplifier (Harman or BOSE) is availabe as an optional feature and is linked to the PCM2 via the optical waveguide.

Internal amplifier

The internal amplifier is part of the PCM2 (installed on the main board).

Wake-up function

In an idle state, all control modules that are connected to the MOST are in sleep mode. When the PCM2 is switched on, a light is switched on via the MMI. It is reinforced and passed on by the MOST control modules that are connected.

Fault overview – external Harman amplifier

Fault code	Fault text	Fault effect
8001	Supply voltage	Failure
8002	Malfunction in internal memory	Failure
8003	Malfunction in front loudspeaker	Can only be operated under certain conditions
8004	Malfunction in rear loudspeaker	Can only be operated under certain conditions
8005	Malfunction in left subwoofer channel	Can only be operated under certain conditions
8006	Malfunction in right subwoofer channel	Can only be operated under certain conditions
8007	No load on left subwoofer	Can only be operated under certain conditions
8008	No load on right subwoofer	Can only be operated under certain conditions
8009	Incorrect coding	Failure

8001 Harman external amplifier

Supply voltage

Diagnostic conditions

- Ignition on
- PCM2/CDR23 on

!

- *The fault memory status (present / not present) is always updated when the motor is running.*
- *Fault code 8003 is recorded in the PCM2 MMI if the operating buttons are actuated for longer than ≥1 minute'.*

Possible cause of fault

- Battery voltage too low '< 9 V for > 30 sec'
- Battery voltage too high '> 16 V for > 30 sec'
- Check battery
- Check fuses

Affected pins

Control module amplifier plug A, pin 9 and pin 10

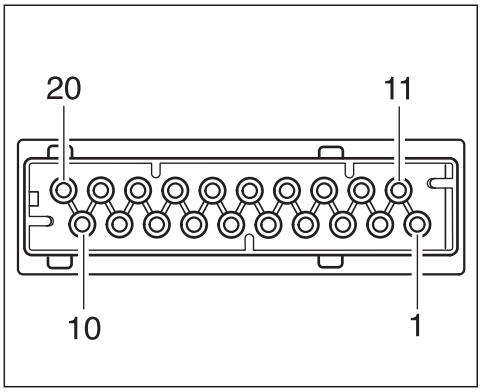

Diagnosis/troubleshooting

Work instruction			Display OK	If not OK
1	Checking battery	♦ Examine battery.	⇒ Step 2	Charge or replace battery. → End
2	Checking fuse	♦ Check amplifier fuse D 9.	⇒ Step 3	Replace fuse. → End
3	Checking input voltage at pin 30	♦ Switch off ignition. ♦ Pull plug A off the amplifier. ♦ Switch on ignition. ♦ Measure resistance on plug A on amplifier between pin 9 and ground.	Battery voltage ⇒ Step 4	Corrosion in the plug connection or contact resistance in the supply lead. Check and repair wiring harness. → End
4	Checking ground points	♦ Measure resistance on plug A on amplifier between pin 10 and ground.	< 0.5 Ω → End	Check ground points or repair wiring harness. → End

8002 External Harman amplifier

Malfunction in internal memory

Diagnostic conditions

- Ignition on
- PCM2/CDR23 on

Note!

≥

Possible cause of fault

- EEPROM fault
- Memory faulty

Affected pins

-

Diagnosis/troubleshooting on the external amplifier

Work instruction			Display OK	If not OK
1	Read out PCM2 fault memory	♦ Connect the Porsche System Tester II No. 9588 to the diagnostic socket; switch on the ignition and the Porsche System Tester II No. 9588 ♦ Select vehicle type 911 Turbo (996) and start the automatic control module search ♦ In the Control units menu, select 'PCM2' ♦ In the PCM2 menu, select 'External amplifier' ♦ Make a selection in the 'Fault memory' menu and start with the [>>] key ♦ Read out fault memory ♦ Erase fault memory ♦ Remove ignition key and switch on ignition again ♦ Read out fault memory again ♦ Extract ambient data, press the [>>] key	The fault is remedied → End	⇒ Step 2
2	♦ Replace external amplifier		→ End	

8003 External Harman amplifier

Malfunction in front loudspeaker

Diagnostic conditions

- Ignition on
- PCM2/CDR23 on

Note!

≥

Possible cause of fault

- Short circuit to B+/ground in the wiring harness
- Short circuit - loudspeaker faulty
- Short circuit - amplifier faulty

Affected pin

External Harman amplifier, plug A, pins 14 and 15

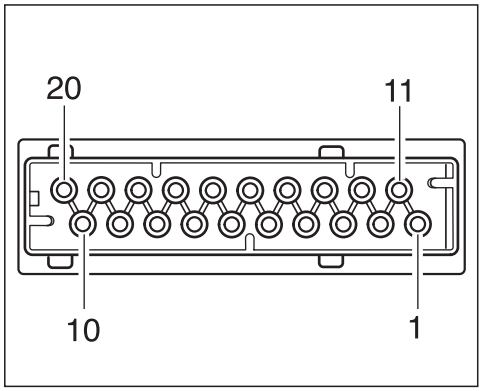

Diagnosis/troubleshooting for Harman

Work instruction			Display OK	If not OK
1	Read out external amplifier fault memory	♦ Connect the Porsche System Tester II No. 9588 to the diagnostic socket; switch on the ignition and the Porsche System Tester II No. 9588 ♦ Select vehicle type 911 Turbo (996) and start the automatic control module search ♦ In the Control units menu, select 'PCM2' ♦ In the PCM2 menu, select 'External amplifier' ♦ Make a selection in the 'Fault memory' menu and start with the [>>] key ♦ Read out fault memory ♦ Erase fault memory ♦ Remove ignition key and switch on ignition again ♦ Read out fault memory ♦ Extract ambient data, press the [>>] key	→ End	Fault code is still displayed ⇒ Step 2
2	Check wiring harness and left dashboard loudspeaker	♦ Switch off ignition ♦ Pull off plug A on the amplifier ♦ Measure resistance on plug A, pins 5 and 14	= 4 Ω ⇒ 5	⇒ Step 3
3	Check wiring harness to left dashboard loudspeaker	♦ Pull off the plugs on the loudspeakers ♦ Check the resistance in the wire between pin 5 on plug A of the amplifier and pin 2 of the plug for the front right door loudspeaker	< 0.5 Ω Step 4	Repair open circuit in wiring harness → End
4	Check wiring harness to left dashboard loudspeaker	♦ Pull off the plug on the left dashboard loudspeaker ♦ Check the resistance in the wire between pin 14 on plug A of the amplifier and pin 1 of the plug for the front right door loudspeaker. Select	< 0.5 Ω ⇒ Step 6	Repair open circuit in wire → End

Work instruction			Display OK	If not OK
5	Check wiring harness to left dashboard loud-speaker	♦ Pull off the plugs on the loud-speakers ♦ Check the resistance in the wire from pin 5 on plug A of the amplifier to pin 14	∞ Ω ⇒ Step 6	Repair short circuit in wiring harness → End
6	Check wiring harness to left dashboard loud-speaker	♦ Check the resistance in the wire from pin 14 on plug A of the amplifier to ground	∞ Ω ⇒ Step 7	Short circuit to ground. Repair wiring harness → End
7	Check wiring harness to left dashboard loud-speaker	♦ Check the resistance in the wire from pin 5 on plug A of the amplifier to ground	∞ Ω ⇒ Step 8	Short circuit to ground. Repair wiring harness → End
8	Check wiring harness to left dashboard loud-speaker	♦ Check the voltage of the wire from pin 5 on plug A of the amplifier to ground ♦ Switch ignition on	0 V ⇒ Step 9	Repair short circuit to B+ in the wiring harness → End
9	Check wiring harness to left dashboard loud-speaker	♦ Check the voltage of the wire from pin 14 on plug A of the amplifier to ground ♦ Switch ignition on	0 V ⇒ Step 10	Repair short circuit to B+ in the wiring harness → End
10	Check wiring harness and right dashboard loud-speaker	♦ Switch off ignition ♦ Pull off plug A on the amplifier ♦ Measure resistance on plug A, pins 6 and 15	= 4 Ω ⇒ 13	⇒ Step 11
11	Check wiring harness and right dashboard loud-speaker	♦ Pull off the plugs on the loud-speakers ♦ Check the resistance in the wire between pin 6 on plug A of the amplifier and pin 1 of the plug for the front right door loud-speaker	< 0.5 Ω Step 12	Repair open circuit in wiring harness → End
12	Check wiring harness and right dashboard loud-speaker	♦ Check the resistance in the wire between pin 15 on plug A of the amplifier and pin 2 of the plug for the front right door loud-speaker	< 0.5 Ω ⇒ Step 13	Repair open circuit in wire → End
13	Check wiring harness and right dashboard loud-speaker	♦ Check the resistance in the wire from pin 6 on plug A of the amplifier to pin 14	∞ Ω ⇒ Step 14	Repair short circuit in wiring harness → End
14	Check wiring harness to right dashboard loud-speaker	♦ Check the resistance in the wire from pin 15 on plug A of the amplifier to ground	∞ Ω ⇒ Step 15	Short circuit to ground. Repair wiring harness → End

Work instruction			Display OK	If not OK
15	Check wiring harness to right dashboard loudspeaker	♦ Check the resistance in the wire from pin 6 on plug A of the amplifier to ground	∞ Ω ⇒ Step 16	Short circuit to ground. Repair wiring harness → End
16	Check wiring harness to right dashboard loudspeaker	♦ Check the voltage of the wire from pin 6 on plug A of the amplifier to ground ♦ Switch ignition on	0 V ⇒ Step 17	Repair short circuit to B+ in the wiring harness → End
17	Check wiring harness to right dashboard loudspeaker	♦ Check the voltage of the wire from pin 15 on plug A of the amplifier to ground ♦ Switch ignition on	0 V ⇒ Step 18	Repair short circuit to B+ in the wiring harness → End
18	Left dashboard loudspeaker	♦ Check resistance on plug A of the loudspeaker, pins 1 and 2	= 4 Ω ⇒ Step 19	⇒ Step 20
19	Right dashboard loudspeaker	♦ Check resistance on plug A of the loudspeaker, pins 1 and 2	= 4 Ω ⇒ Step 22	⇒ Step 21
20	Replace left dashboard loudspeaker		→ End	⇒ Step 19
21	Replace right dashboard loudspeaker		→ End	⇒ Step 11
22	Replace amplifier		→ End	

9101 8004 Harman external amplifier

Rear loudspeaker channel faulty

Diagnostic conditions

- Ignition on
- PCM2/CDR23 on

!

Fault code 8003 is recorded in the PCM2 MMI if the operating buttons are actuated for longer than ∋≥1 minute'.

Possible cause of fault

- Short circuit to B+/ground in wiring harness
- Short circuit loudspeaker faulty
- Short circuit amplifier faulty

Affected pins

Harman external amplifier plug A, pin 24, pin 29, pin 25, pin 38.

Diagnosis/troubleshooting

Work instruction			Display OK	If not OK
1	Checking wiring harness and front left loudspeaker and left door box	♦ Connect the Porsche System Tester II No. 9588 to the diagnostic socket; switch on the ignition and the Porsche System Tester II No. 9588. ♦ Select vehicle type 911 (996) and start the automatic control module search. ♦ Select 'PCM2' in the "Control modules" menu. ♦ Select 'External amplifier' in the PCM2 menu. ♦ Select 'Fault memory' in the menu and click the [> >] key. ♦ Read out fault memory. ♦ Erase fault memory. ♦ Remove ignition key and switch on ignition again. ♦ Read out fault memory. ♦ Extract ambient data, press the [>>] key.	→ End	Fault code is still displayed. ⇒ Step 2
2	Checking wiring harness and front left loudspeaker and left door box	♦ Switch off ignition. ♦ Pull plug A off the amplifier. ♦ Check resistance on plug A pin 27 and pin 32.	= 5 Ω ⇒ Step 3	⇒ Step 4
3	Checking wiring harness and front left loudspeaker and left door box	♦ Switch off ignition. ♦ Pull plug A off the amplifier. ♦ Measure resistance on plug A pin 25 and pin 38.	= 4 Ω ⇒ Step 10	⇒ Step 4
4	Checking wiring harness to front left door speaker and left door box	♦ Pull plugs off loudspeakers. ♦ Check resistance of plug A of amplifier pin 32 to plug on front right door speaker pin 2.	< 5 Ω Step 5	Open circuit in wiring/short circuit to ground. Repair wiring harness. → End
5	Checking wiring harness to front left door speaker and left door box	♦ Check resistance of wiring from plug A of amplifier pin 27 to plug on front right door speaker pin 1.	< 5 Ω ⇒ Step 8	Open circuit in wiring/short circuit to ground. Repair wiring harness. → End
6	Checking wiring harness to front left door speaker and left door box	♦ Check resistance of wiring from plug A of amplifier pin 25 to plug on front left door speaker pin 2.	< 5 Ω ⇒ Step 7	Open circuit in wiring/short circuit to ground. Repair wiring harness. → End

Work instruction			Display OK	If not OK
7	Checking wiring harness to front left door loudspeaker	♦ Check resistance in wiring of plug A of amplifier pin 38 to plug on front left door loudspeaker pin 1.	< 5 Ω ⇒ Step 9	Open circuit in wiring/short circuit to ground. Repair wiring harness. → End
8	Replacing front left loudspeaker		→ End	⇒ Step 10
9	Replacing front left door loudspeaker		→ End	⇒ Step 10
10	Replacing amplifier		→ End	

8005 External Harman amplifier

Malfunction in left subwoofer channel

Diagnostic conditions

- Ignition on
- PCM2/CDR23 on

Note!

≥

Possible cause of fault

Short circuit to B+/ground in the wiring harness

Short circuit - loudspeaker faulty

Short circuit - amplifier faulty

Affected pin

External Harman amplifier, plug A, pins 7 and 16

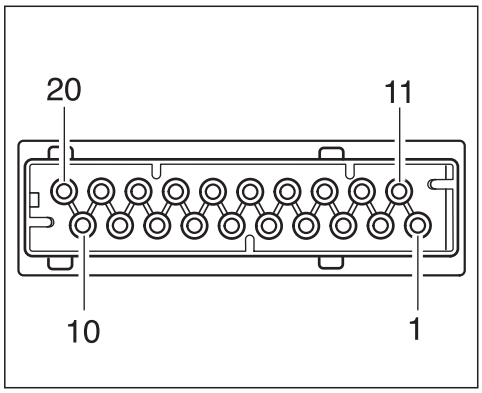

Diagnosis/troubleshooting

Work instruction			Display OK	If not OK
1	Read out external amplifier fault memory	♦ Connect the Porsche System Tester II No. 9588 to the diagnostic socket; switch on the ignition and the Porsche System Tester II No. 9588 ♦ Select vehicle type 911 Turbo (996) and start the automatic control module search ♦ In the Control units menu, select 'PCM2' ♦ In the PCM2 menu, select 'External amplifier' ♦ Make a selection in the 'Fault memory' menu and start with the [>>] key ♦ Read out fault memory ♦ Erase fault memory ♦ Remove ignition key and switch on ignition again ♦ Read out fault memory ♦ Extract ambient data, press the [>>] key	→ End	Fault code is still displayed ⇒ Step 2
2	Check wiring harness and left door loudspeaker	♦ Switch off ignition ♦ Pull off plug A on the amplifier ♦ Check resistance on plug A, pins 7 and 16	= 4 Ω ⇒ Step 7	⇒ Step 3
3	Check wiring harness to left door loudspeaker	♦ Pull off the plug on the left door speakers ♦ Check the resistance in the wire between pin 7 on plug A of the amplifier and pin 2 of the plug for the front right door loudspeaker	< 0.5 Ω Step 4	Repair open circuit in wiring harness → End
4	Check wiring harness to left door loudspeaker	♦ Pull off the plug on the left door loudspeaker ♦ Check the resistance in the wire between pin 16 on plug A of the amplifier and pin 1 of the plug for the left door loudspeaker	< 0.5 Ω Step 5	Repair open circuit in wiring harness → End

Work instruction			Display OK	If not OK
5	Check wiring harness to left door loudspeaker	♦ Pull off the plug on the door loudspeaker ♦ Check the resistance in the wire from pin 7 on plug A of the amplifier to pin 16	∞ Ω ⇒ Step 6	Repair short circuit in wiring harness → End
6	Check wiring harness to left door loudspeaker	♦ Check the resistance in the wire between pin 7 on plug A of the amplifier and pin 14	∞ Ω ⇒ Step 9	Repair short circuit to ground in wiring harness → End
7	Check wiring harness to left door loudspeaker	♦ Check the resistance in the wire from pin 7 on plug A of the amplifier to ground	∞ Ω ⇒ Step 8	Repair short circuit to ground in the wiring harness → End
8	Check wiring harness to left door loudspeaker	♦ Check the voltage of the wire from pin 7 on plug A of the amplifier to ground ♦ Switch ignition on	< 0 V ⇒ Step 8	Repair short circuit to B+ in the wiring harness → End
9	Check wiring harness to left door loudspeaker	♦ Check the voltage of the wire from pin 16 on plug A of the amplifier to ground ♦ Switch ignition on	0 V ⇒ Step 10	Repair short circuit to B+ in the wiring harness → End
10	Replace front left door loudspeaker		→ End	⇒ Step 11
11	Replace amplifier		→ End	

8006 External Harman amplifier

Malfunction in right subwoofer channel

Diagnostic conditions

- Ignition on
- PCM2/CDR23 on

Note!

≥

Possible cause of fault

- Short circuit to B+/ground in the wiring harness
- Short circuit - loudspeaker faulty
- Short circuit - amplifier faulty

Affected pin

External Harman amplifier, plug A, pins 8 and 17

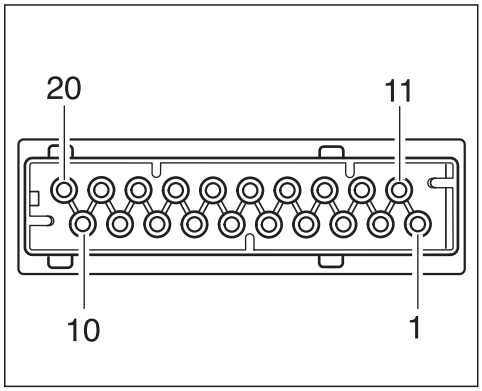

Diagnosis/troubleshooting

Work instruction			Display OK	If not OK
1	Read out external amplifier fault memory	♦ Connect the Porsche System Tester II No. 9588 to the diagnostic socket; switch on the ignition and the Porsche System Tester II No. 9588 ♦ Select vehicle type 911 (996) and start the automatic control module search ♦ In the Control units menu, select 'PCM2' ♦ In the PCM2 menu, select 'External amplifier' ♦ Make a selection in the 'Fault memory' menu and start with the [>>] key ♦ Read out fault memory ♦ Erase fault memory ♦ Remove ignition key and switch on ignition again ♦ Read out fault memory ♦ Extract ambient data, press the [>>] key	→ End	Fault code is still displayed ⇒ Step 2
2	Check wiring harness and right door loudspeaker	♦ Switch off ignition ♦ Pull off plug A on the amplifier ♦ Check resistance on plug A, pins 8 and 17	= 4 Ω ⇒ Step 7	⇒ Step 3
3	Check wiring harness to right door loudspeaker	♦ Pull off the plug on the right door speakers ♦ Check the resistance in the wire between pin 8 on plug A of the amplifier and pin 2 of the plug for the front right door loudspeaker	< 0.5 Ω Step 4	Repair open circuit in wiring harness → End
4	Check wiring harness to right door loudspeaker	♦ Pull off the plug on the right door loudspeaker ♦ Check the resistance in the wire between pin 17 on plug A of the amplifier and pin 1 of the plug for the right door loudspeaker	< 0.5 Ω Step 5	Repair open circuit in wiring harness → End

Work instruction			Display OK	If not OK
5	Check wiring harness to right door loudspeaker	♦ Pull off the plug on the door loudspeaker ♦ Check the resistance in the wire from pin 8 on plug A of the amplifier to pin 17	∞ Ω ⇒ Step 6	Repair short circuit in wiring harness → End
6	Check wiring harness to right door loudspeaker	♦ Check the resistance in the wire from pin 8 on plug A of the amplifier to pin 14	∞ Ω ⇒ Step 9	Repair short circuit to ground in wiring harness → End
7	Check wiring harness to right door loudspeaker	♦ Check the resistance in the wire from pin 8 on plug A of the amplifier to ground	∞ Ω ⇒ Step 8	Repair short circuit to ground in the wiring harness → End
8	Check wiring harness to right door loudspeaker	♦ Check the voltage of the wire from pin 8 on plug A of the amplifier to ground ♦ Switch ignition on	< 0 V ⇒ Step 8	Repair short circuit to B+ in the wiring harness → End
9	Check wiring harness to right door loudspeaker	♦ Check the voltage of the wire from pin 17 on plug A of the amplifier to ground ♦ Switch ignition on	0 V ⇒ Step 10	Repair short circuit to B+ in the wiring harness → End
10	Replace front right door loudspeaker		→ End	⇒ Step 11
11	Replace amplifier		→ End	

8007 External Harman amplifier

No load on left subwoofer

Diagnostic conditions

- Ignition on
- PCM2/CDR23 on

Note!

≥

Possible cause of fault

- Short circuit to B+/ground in the wiring harness
- Short circuit - loudspeaker faulty
- Short circuit - amplifier faulty

Affected pin

External Harman amplifier, plug A, pin 1, pin 2, pin 7, pin 14, pin 16. ►

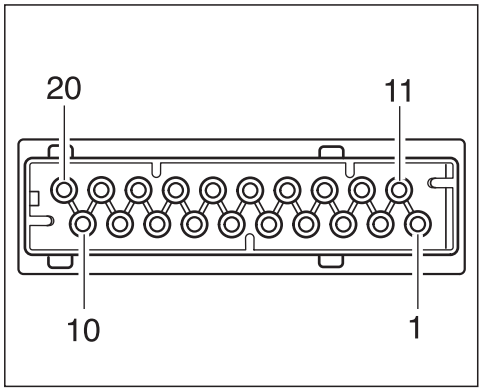

Diagnosis/troubleshooting for Harman

Work instruction			Display OK	If not OK
1	Read out external amplifier fault memory	♦ Connect the Porsche System Tester II No. 9588 to the diagnostic socket; switch on the ignition and the Porsche System Tester II No. 9588 ♦ Select vehicle type 911 (996) and start the utomatic control module search ♦ In the Control units menu, select 'PCM2' ♦ In the PCM2 menu, select 'External amplifier' ♦ Make a selection in the 'Fault memory' menu and start with the [>>] key ♦ Read out fault memory ♦ Erase fault memory ♦ Remove ignition key and switch on ignition again ♦ Read out fault memory ♦ Extract ambient data, press the [>>] key	→ End	Fault code is still displayed ⇒ Step 2
2	Check wiring harness and left door loudspeaker	♦ Switch off ignition ♦ Pull off plug A on the amplifier ♦ Check resistance on plug A, pins 7 and 16	= 4 Ω ⇒ Step 7	⇒ Step 3
3	Check wiring harness to left door loudspeaker	♦ Pull off the plug on the left door speakers ♦ Check the resistance in the wire between pin 7 on plug A of the amplifier and pin 2 of the plug for the front right door loudspeaker	< 0.5 Ω Step 4	Repair open circuit in wiring harness → End
4	Check wiring harness to left door loudspeaker	♦ Pull off the plug on the left door loudspeaker ♦ Check the resistance in the wire between pin 16 on plug A of the amplifier and pin 1 of the plug for the left door loudspeaker	< 0.5 Ω Step 5	Repair open circuit in wiring harness → End

Work instruction			Display OK	If not OK
5	Check wiring harness to left door loudspeaker	♦ Pull off the plug on the door loudspeaker ♦ Check the resistance in the wire from pin 7 on plug A of the amplifier to pin 16	∞ Ω ⇒ Step 6	Repair short circuit in wiring harness → End
6	Check wiring harness to left door loudspeaker	♦ Check the resistance in the wire from pin 7 on plug A of the amplifier to pin 14	∞ Ω ⇒ Step 9	Repair short circuit to ground in wiring harness → End
7	Check wiring harness to left door loudspeaker	♦ Check the resistance in the wire from pin 7 on plug A of the amplifier to ground	∞ Ω ⇒ Step 8	Repair short circuit to ground in the wiring harness → End
8	Check wiring harness to left door loudspeaker	♦ Check the voltage of the wire from pin 7 on plug A of the amplifier to ground ♦ Switch ignition on	< 0 V ⇒ Step 8	Repair short circuit to B+ in the wiring harness → End
9	Check wiring harness to left door loudspeaker	♦ Check the voltage of the wire from pin 16 on plug A of the amplifier to ground ♦ Switch ignition on	0 V ⇒ Step 10	Repair short circuit to B+ in the wiring harness → End
10	Replace front left door loudspeaker		→ End	⇒ Step 11
11	Replace amplifier		→ End	

8008 External Harman amplifier

No load on right subwoofer

Diagnostic conditions

- Ignition ON:
- PCM2/CDR23 ON:

Note!

≥

Possible cause of fault

- Short circuit to B+/ground in the wiring harness
- Short circuit - loudspeaker faulty
- Short circuit - amplifier faulty

Affected pin

External Harman amplifier, plug A, pin 1, pin 2, pin 8, pin 14, pin 17 ►

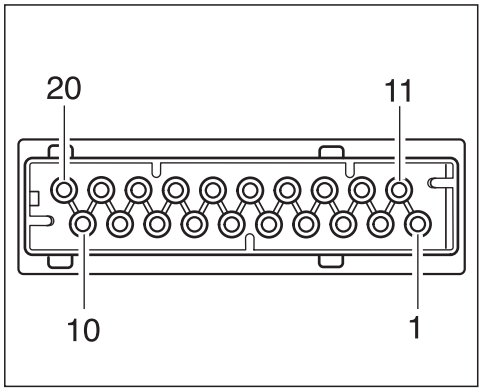

Diagnosis/troubleshooting

Work instruction			Display OK	If not OK
1	Read out external amplifier fault memory	♦ Connect the Porsche System Tester II No. 9588 to the diagnostic socket; switch on the ignition and the Porsche System Tester II No. 9588 ♦ Select vehicle type 911 Turbo (996) and start the automatic control module search ♦ In the Control units menu, select 'PCM2' ♦ In the PCM2 menu, select 'External amplifier' ♦ Make a selection in the 'Fault memory' menu and start with the [>>] key ♦ Read out fault memory ♦ Erase fault memory ♦ Remove ignition key and switch on ignition again ♦ Read out fault memory ♦ Extract ambient data, press the [>>] key	→ End	Fault code is still displayed ⇒ Step 2
2	Check wiring harness and right door loudspeaker	♦ Switch off ignition ♦ Pull off plug A on the amplifier ♦ Check resistance on plug A, pins 8 and 17	= 4 Ω ⇒ Step 7	⇒ Step 3
3	Check wiring harness to right door loudspeaker	♦ Pull off the plug on the right door speakers ♦ Check the resistance in the wire between pin 8 on plug A of the amplifier and pin 2 of the plug for the front right door loudspeaker	< 0.5 Ω Step 4	Repair open circuit in wiring harness → End
4	Check wiring harness to right door loudspeaker	♦ Pull off the plug on the right door loudspeaker ♦ Check the resistance in the wire between pin 17 on plug A of the amplifier and pin 1 of the plug for the right door loudspeaker	< 0.5 Ω Step 5	Repair open circuit in wiring harness → End

Work instruction			Display OK	If not OK
5	Check wiring harness to right door loudspeaker	♦ Pull off the plug on the door loudspeaker ♦ Check the resistance in the wire from pin 8 on plug A of the amplifier to pin 17	∞ Ω ⇒ Step 6	Repair short circuit in wiring harness → End
6	Check wiring harness to right door loudspeaker	♦ Check the resistance in the wire from pin 8 on plug A of the amplifier to pin 14	∞ Ω ⇒ Step 9	Repair short circuit to ground in wiring harness → End
7	Check wiring harness to right door loudspeaker	♦ Check the resistance in the wire from pin 8 on plug A of the amplifier to ground	∞ Ω ⇒ Step 8	Repair short circuit to ground in the wiring harness → End
8	Check wiring harness to right door loudspeaker	♦ Check the voltage of the wire from pin 8 on plug A of the amplifier to ground ♦ Switch ignition on	< 0 V ⇒ Step 8	Repair short circuit to B+ in the wiring harness → End
9	Check wiring harness to right door loudspeaker	♦ Check the voltage of the wire from pin 17 on plug A of the amplifier to ground ♦ Switch ignition on	0 V ⇒ Step 10	Repair short circuit to B+ in the wiring harness → End
10	Replace front right door loudspeaker		→ End	⇒ Step 11
11	Replace amplifier		→ End	

8009 External Harman amplifier

Incorrect coding

Diagnostic conditions

- Ignition on
- PCM2/CDR23 on

Note!

Deactivate the 'automatic traffic announcement' before performing the diagnosis on the PCM2. If this is not done, the diagnosis will abort.

Possible cause of fault

- No coding or incorrect coding

Affected pin

-

Diagnosis/troubleshooting for Harman

Work instruction			Display OK	If not OK
1	Coding of the vehicle type	♦ Connect the Porsche System Tester II No. 9588 to the diagnostic socket; switch on the ignition and the Porsche System Tester II No. 9588 ♦ Select vehicle type 911 Turbo (996) and start the automatic control module search ♦ In the Control units menu, select 'PCM2' ♦ In the PCM2 menu, select 'External amplifier' ♦ Select 'Coding' in the menu and start with the [>>] key ♦ Perform the coding in accordance with the instructions of the Porsche System Tester II No. 9588	→ End	

PCM2/CDR23 (External BOSE amplifier)

Introduction - external BOSE amplifier

The manual contains the diagnosis for the following system:

External BOSE amplifier

General instructions/safety instructions

The following points must be observed during vehicle diagnosis:

- After the battery is connected, volatile memories must be reprogrammed. In the case of radio coding and tuning, the customer must be informed of decoding and the deleted tuner memory.
- After the battery has been connected, the instructions in the assembly ⇒ 9; Rep. Gr. - ; Work instructions after disconnecting the battery must be observed.
- Deactivate the 'automatic traffic announcement' before beginning the diagnosis on the PCM2. If this is not done, the system will crash (applies only to version < 03).
- When working on the optical waveguide, please observe the instructions in assembly ⇒ 9; Rep. Gr. 9768; Optical waveguide - MOST bus.
- After troubleshooting or repairs, erase the fault memory with the 9588 Porsche System Tester II and carry out a test drive.
- After the test drive, read out the fault memory with the 9588 Porsche System Tester II again.

Danger!

Danger of injury through triggering of driver's airbag

- ***9588 Never hang the Porsche System Tester II over the steering wheel.***

Caution!

Danger of damage due to improper handling of the battery and the control module connectors!

- ***Never disconnect battery with engine running.***

- ***Never start engine without securely connected battery.***
- ***Never pull off or push on plug connections for the control modules or other electronic components when the ignition is switched on.***

General information on the fault memory

Fault code setting conditions

Fault codes can be set in several circumstances, e.g.:

- battery disconnected.
- plug connections disconnected.
- power failure.

In these circumstances, no fault is present in the system and the fault memory must be erased.

Fault memory Info key F8

In order to be able to assess the fault exactly, the fault memory Info key F8 must be pressed. This information should be saved using the Save key F4 and printed out. If a fault code is stored with "not present" status and no other problems are present, then the fault memory must be erased.

Fault type - Frequency counter/Temperature/Voltage; Speed/Time of occurrence.

Fault counter	When a fault first occurs, a fault entry is made in the fault memory and the counter is simultaneously set to 50. If a fault is present, the counter is incremented by 1 for each "ignition on". The maximum count is 255. The counter is decremented if the fault is no longer present. The fault memory is automatically erased when the counter reaches 0. If the error occurs again when the counter is between 1 and 49, the counter is reset to 50.
Lock status of MOST ring	The value indicates the status of the MOST ring when the fault occurred. ♦ lock ♦ unlock
Supply voltage	The value indicates the voltage at the time the fault occurred.
Supply voltage fault type	The display shows which fault type has occurred: ♦ no fault type ♦ not present

Display '*' in the menu 'Control modules' and menu 'PCM2 MOST component check'.

Different required and actual installed components lists

When the 'automatic control module search' is complete, the following display '*' appears in front of the control module description 'PCM2' in the 'Control modules' menu, as well as in the 'PCM2 MMI function selection' in front of the entry 'MOST required installed components list' if the 9588 Porsche System Tester II establishes a difference between the required and actual installed components list and there is no fault code in one of the fault memories of the MOST control modules.

If there is a fault code present in one of the MOST control modules, the display '*' is only shown in the 'PCM2 MMI function selection' in front of the line 'MOST required installed components list'.

If there is a display in the menu Control module, an existing fault code has priority and a '#' is set.

Vehicle hand-over

The 'PCM2' control module is converted to delivery mode (low-current mode) in production. As known from other systems (alarm system, CDR23, instrument cluster, roll-over bar), the PCM2 must be activated with the 9588 Porsche System Tester II.

1. 9588 Connect and start the Porsche System Tester II and switch on the ignition.
2. Select the menu item 'Special functions' and press the [>>] key.
3. Select the menu item 'Vehicle hand-over' and press the [>>] key.
4. Follow the instructions of the 9588 Porsche System Tester II.

Production mode

If the MOST control module is set to Production mode on, it is in low-current mode. The display remains black, the control module cannot function.

1. 9588 Connect and start the Porsche System Tester II and switch on the ignition.
2. Select '911 Turbo (996)' in the Vehicle type menu and confirm with the [>>] key.
3. Select 'PCM2' in the control modules selection and confirm with the [>>] key.

4. Select 'PCM2 GW' in the PCM2 function selection and confirm with the [>>] key.
5. Select 'Coding' in the PCM2 GW function selection and confirm with the [>>] key.
6. Select 'Production mode' in the PCM2 GW Coding function selection and confirm with the [>>] key.
7. Select 'Production mode off' menu and code with the [F8] key.

The following options can be coded:

- Production mode off.
- Production mode on.

Control module replacement - PCM2

The PCM2 is supplied in 'production mode on' in new vehicles and as a spare part. Before putting the PCM2 into operation, the 'Production mode on' must be set to 'Production mode off' in the Coding menu when selecting the function of the PCM2-GW, and the vehicle must be locked and secure. Afterwards, PCM2 is functional. The procedure is explained in detail under 'Production mode'.

Tools - external BOSE amplifier

⚠ □□□□□□□

Danger of injury through triggering of driver's airbag

- ***Never hang the Porsche System Tester II No. 9588 over the steering wheel.***
- ***Always place tools and special tools outside the functioning range of all airbags!***

□□□□□

□□□□□□□□□□□□□□□□

□□□□□□□□ □ □□□□□□□□□□□□□□□□□□□□ □□□□

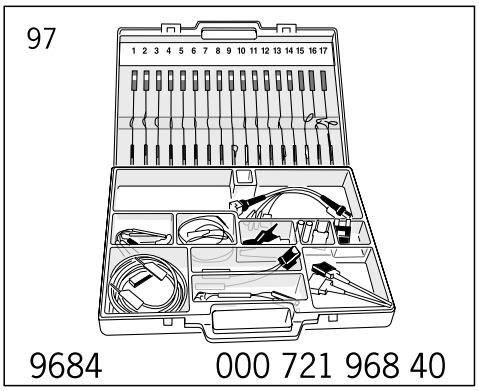
97
1 2 3 4 5 6 7 8 9 10 11 12 13 14 15 16 17
9684
000 721 968 40

□□□□□□□□□□□□□□□□□□□□□□□□□□□□□□□□□□□□ □□□□□

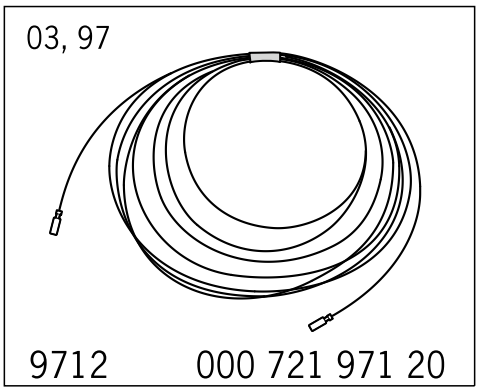
03, 97
9712
000 721 971 20

□□□□□□□□□□□□□□□□□□□

Component arrangement - external BOSE amplifier

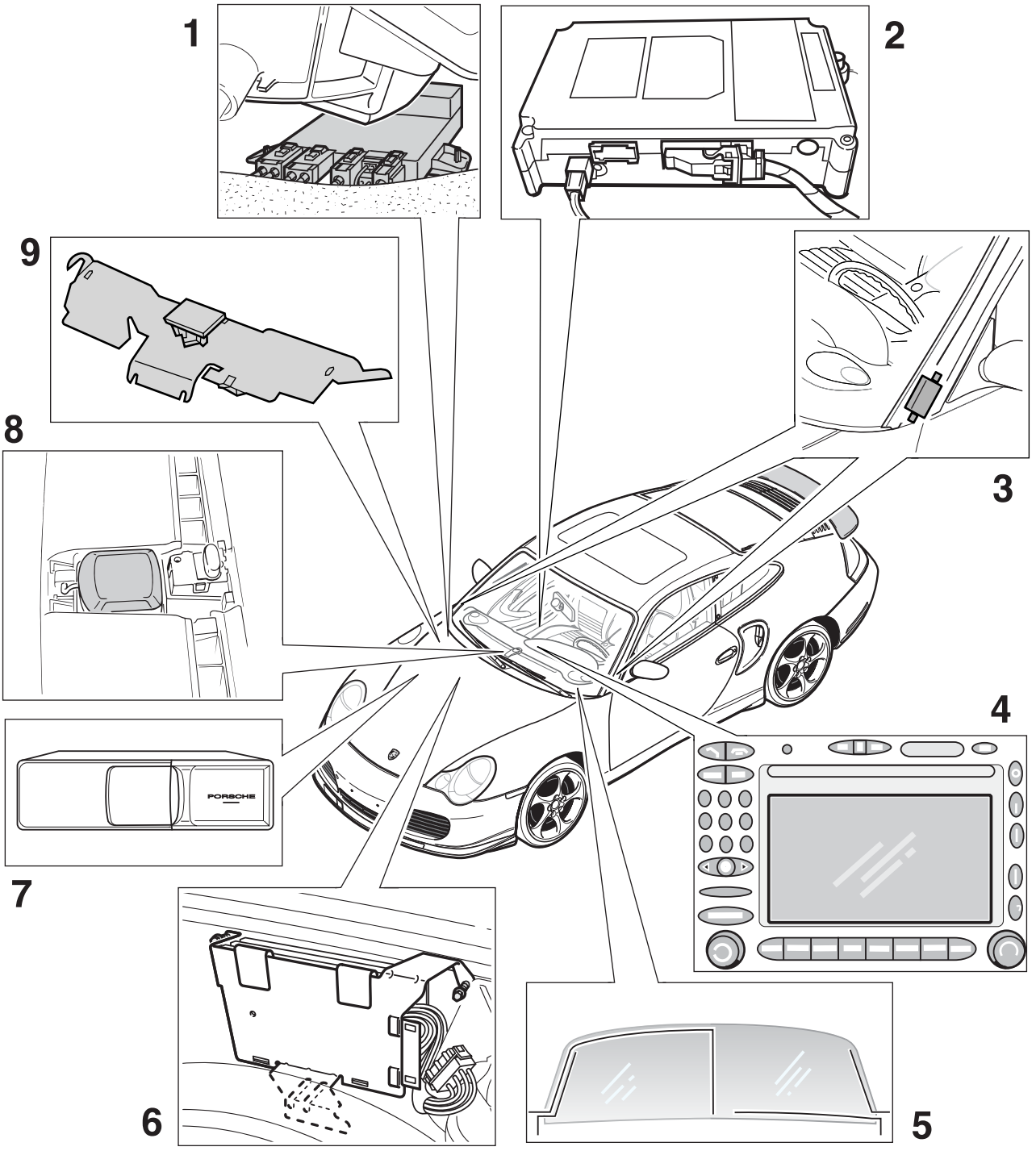

1 - Diversity antenna control unit.

2 - Telephone/telematics control unit

3 - Antenna amplifiers left and right.

4 - PCM2.

5 - Windscreen antenna

6 - External amplifier (option Harman/BOSE).

7 - CD changer

8 - GPS antenna

9 - GSM antenna

Loudspeaker basic system

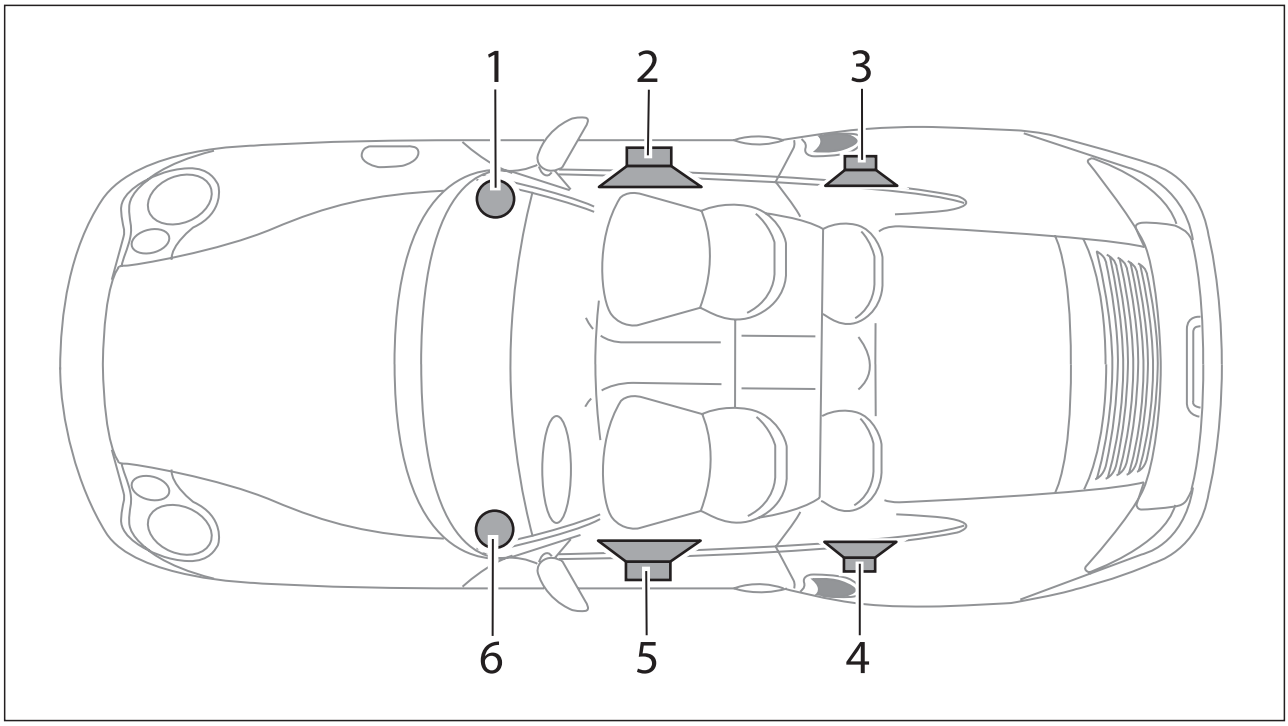

1 - Loudspeaker, front right.

2 - Loudspeaker, door right.

3 - Loudspeaker, rear door right.

4 - Loudspeaker, rear door left.

5 - Loudspeaker, front door left.

6 - Loudspeaker, front left.

Loudspeaker sound package

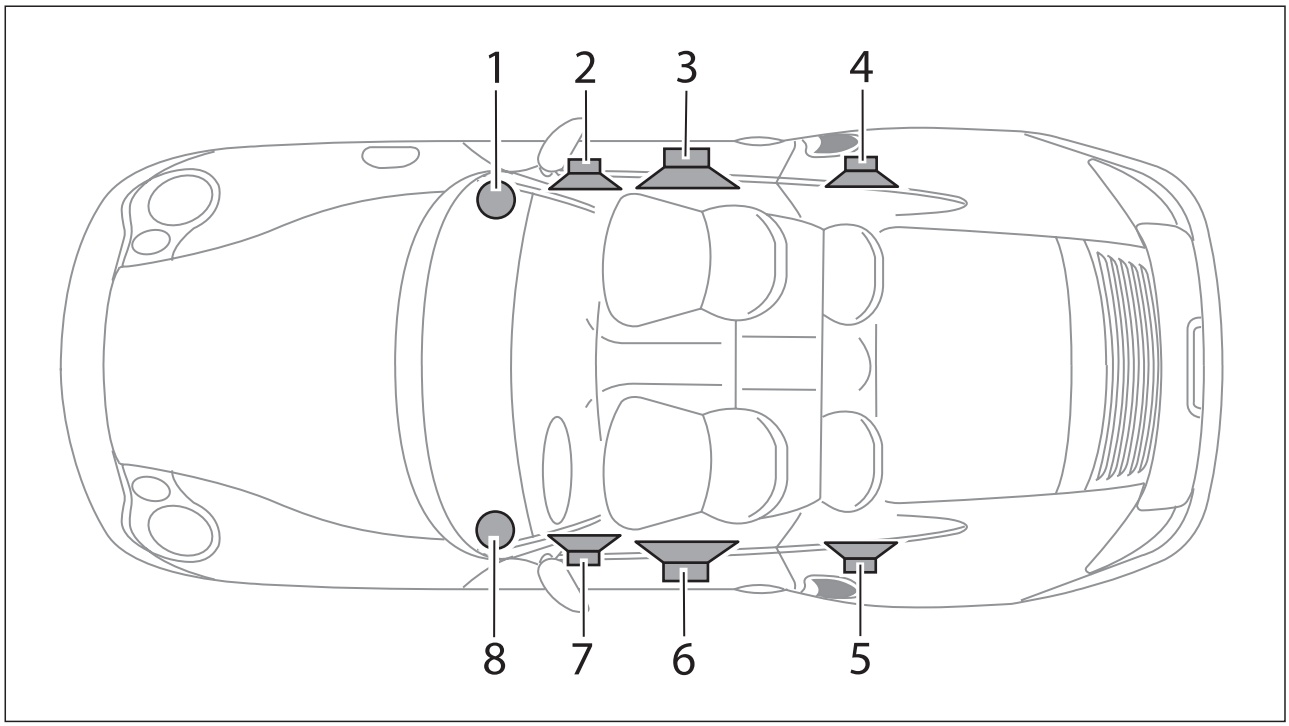

1 - High-pitch loudspeaker, dashboard right.

2 - Middle-pitch loudspeaker, front door right.

3 - Low-pitch loudspeaker, front door right.

4 - Loudspeaker, rear door right.

5 - Loudspeaker, rear door left.

6 - Low-pitch loudspeaker, front door left.

7 - Middle-pitch loudspeaker, front door left.

8 - High-pitch loudspeaker, dashboard left.

High-End loudspeaker

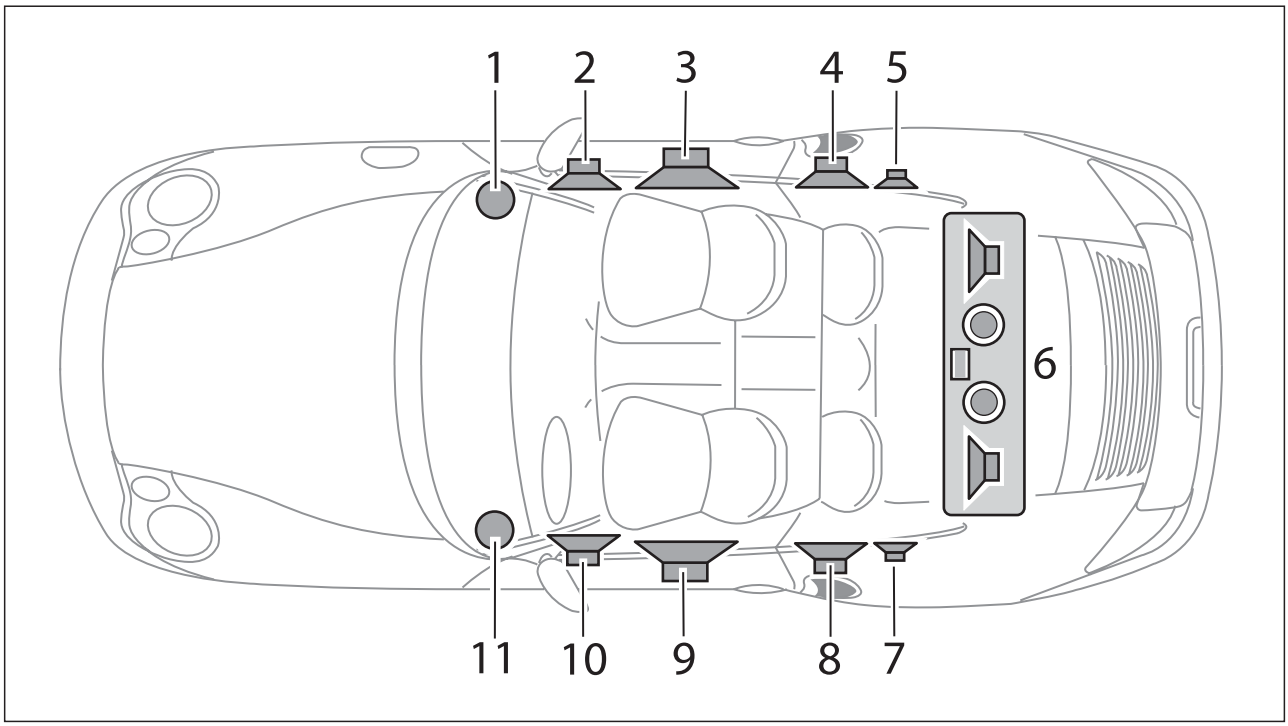

1 - High-pitch loudspeaker, dashboard right.
2 - Middle-pitch loudspeaker, front door right.
3 - Low-pitch loudspeaker, front door right.
4 - Middle-pitch loudspeaker, rear door right.
5 - High-pitch loudspeaker, rear door right.
6 - Subwoofer
7 - High-pitch loudspeaker, rear door left.
8 - Middle-pitch loudspeaker, rear door left.
9 - Low-pitch loudspeaker, door left.
10 - Middle-pitch loudspeaker, door left.
11 - High-pitch loudspeaker, dashboard left.

Connector pin assignment - external BOSE amplifier

Connector assignment

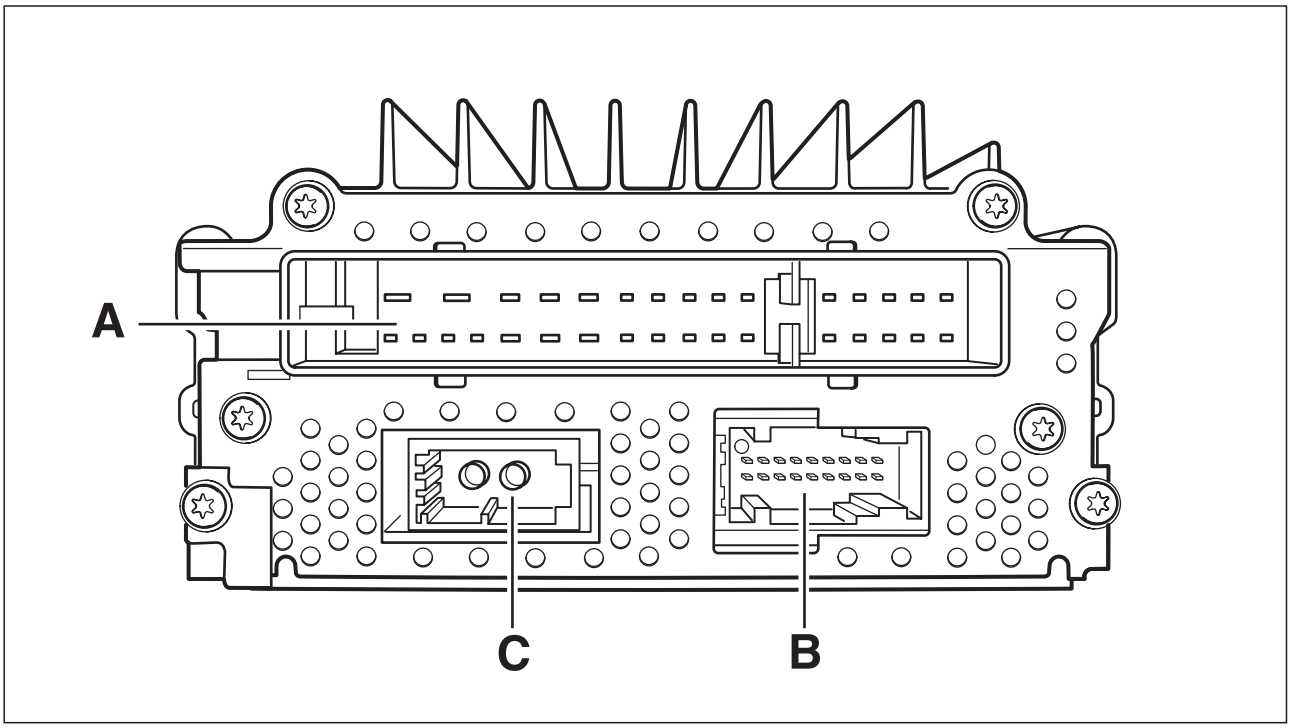

Plug A, loudspeaker

Pin	Designation	Pin	Designation
A 1	Pin 30	A 17	Not used
A 2	Pin 31	A 18	Not used
A 3	Not used	A 19	Not used
A 4	Subwoofer +	A 20	Not used
A 5	Not used	A 21	Not used
A 6	Not used	A 22	Not used
A 7	Not used	A 23	Rear loudspeakers RL + RR +
A 8	Not used	A 24	Dashboard loudspeaker FR +
A 9	Not used	A 25	Door loudspeaker FL +
A 10	Not used	A 26	Door loudspeaker FR +
A 11	Not used	A 27	Dashboard loudspeaker FR +
A 12	Not used	A 28	Rear loudspeakers RL + RR -
A 13	Not used	A 29	Dashboard loudspeaker FR -
A 14	Not used	A 30	Door loudspeaker FL -

Plug A, loudspeaker

Pin	Designation	Pin	Designation
A 15	Not used	A 31	Door loudspeaker FR -
A 16	Subwoofer -	A 32	Dashboard loudspeaker FL -

Plug B, microphone

Pin	Designation	Pin	Designation
B 1	Microphone sound +	B 10	Microphone sound -
B 2	Not used	B 11	Not used
B 3	Not used	B 12	Not used
B 4	Not used	B 13	Not used
B 5	Diagnosis	B 14	Not used
B 6	Not used	B 15	Not used
B 7	Not used	B 16	Not used
B 8	Not used	B 17	Not used
B 9	Not used	B 18	Not used

Plug C, optical waveguide

Pin	Designation	Pin	Designation
C 1	Optical waveguide	C 2	Optical waveguide

Control module function - external BOSE amplifier

Terminating resistors on the CAN

Terminating resistors are fitted to each end of the wiring to prevent reflection on the wiring. These terminating resistors are integrated into each control module. The interconnection prevents the resistors from being measured with the ohmmeter from the outside.

CAN comfort

Communication between the 9588 Porsche System Tester II and the MOST control modules only takes place via the K lead to the instrument cluster. The data is transferred from the instrument cluster gateway to the MOST control modules, via CAN Comfort to the PCM2 gateway, via the electrical MOST in the PCM2 and via the optical MOST outside of the PCM2.

CD changer (CDC)

The CDC is available as an optional feature and is linked to the PCM2 via the optical waveguide.

Coding table

Coding type	**PCM2 GW**	**PCM2 MMI**	**CDR23**	**Navigation**	**Harman amplifier**	**BOSE amplifier**	**CD changer**	**Telephone**
ABS pulse number				X				
Call automatically accepted		X						
Display format		X		X				
Date		X		X				
Display dimming (background)		X						
Units	X	X		X				
External handset								X
Vehicle type vehicle coding	X	X	X	X	X	X		
Vehicle version vehicle coding	X	X	X	X	X	X		
Right/left-hand drive vehicle coding	X	X	X	X	X	X		

Coding type	PCM2 GW	PCM2 MMI	CDR23	Navigation	Harman amplifier	BOSE amplifier	CD changer	Telephone
Wheel size				X				
GAL (NLB)		X	X					
Height/width in per cent				X				
Synchronize K-number	X	X		X				
Real K-number	X	X		X				
Air conditioning	X	X		X				
Country coding	X	X		X				
Main set-up menu		X						
MOST switch	X							
MOST required installed components list		X	X					
Engine version	X*	X*		X*		X*		
PCM2 code		X	X					
Phone status		X						
Porsche Assistance, international designation		X						
Porsche Assistance, international number		X						
Porsche Assistance menu		X						
Porsche Assistance, national designation		X						
Porsche Assistance, national number		X						
Production mode	X		X					
Tyre width				X				
Tyre condition				X				
Summer/winter time		X		X				
Time-out		X						
Tuner parameters	X		X					
User data			X					

Coding type	PCM2 GW	PCM2 MMI	CDR23	Naviga-tion	Harman ampli-fier	BOSE amplifier	CD changer	Tele-phone
Traffic broadcast loudspeaker boost		X	X					
Time		X		X				
Time zone		X		X				
* Only valid for Cayenne E1								

Coding

It is possible to extract the chassis number and to code the PCM2 on a country-specific basis in the 'Modify coding' menu.

Menu item	Function
♦ PCM2 code	Under this menu item, the PCM2 code can be entered after replacing the PCM2. ♦ 9588 Connect and start the Porsche System Tester II and switch on the ignition. ♦ Select vehicle type 911 (996) and the PCM2 control module and press the [>>] key. ♦ Select menu item Coding ♦ Select menu item "PCM2 code" ♦ Take the PCM2 code from IPAS, enter it and code it with the [F8] key.
♦ Country coding	Using this menu item, you can code the country code. ♦ 9588 Connect and start the Porsche System Tester II and switch on the ignition. ♦ Select vehicle type 911 (996) and the PCM2-GW control module and press the [>>] key. ♦ Select the 'Coding' menu item and press the [>>] key. ♦ Select the "Country coding" menu item and press the [>>] key ♦ Select "RoW or USA" and code with the [F8] key.

Data transfer fault

If faults are detected when the data is decoded, this is known as a data transfer fault. The faults can arise when the data is encoded, when the data is transferred through an input level that is optically too low or when the data is decoded. A fault entry is not recorded.

Note!

Using the function 'Reset all coding/transfer counters' all set fault counters of all components can be collectively reset to '0'.

Function of the components

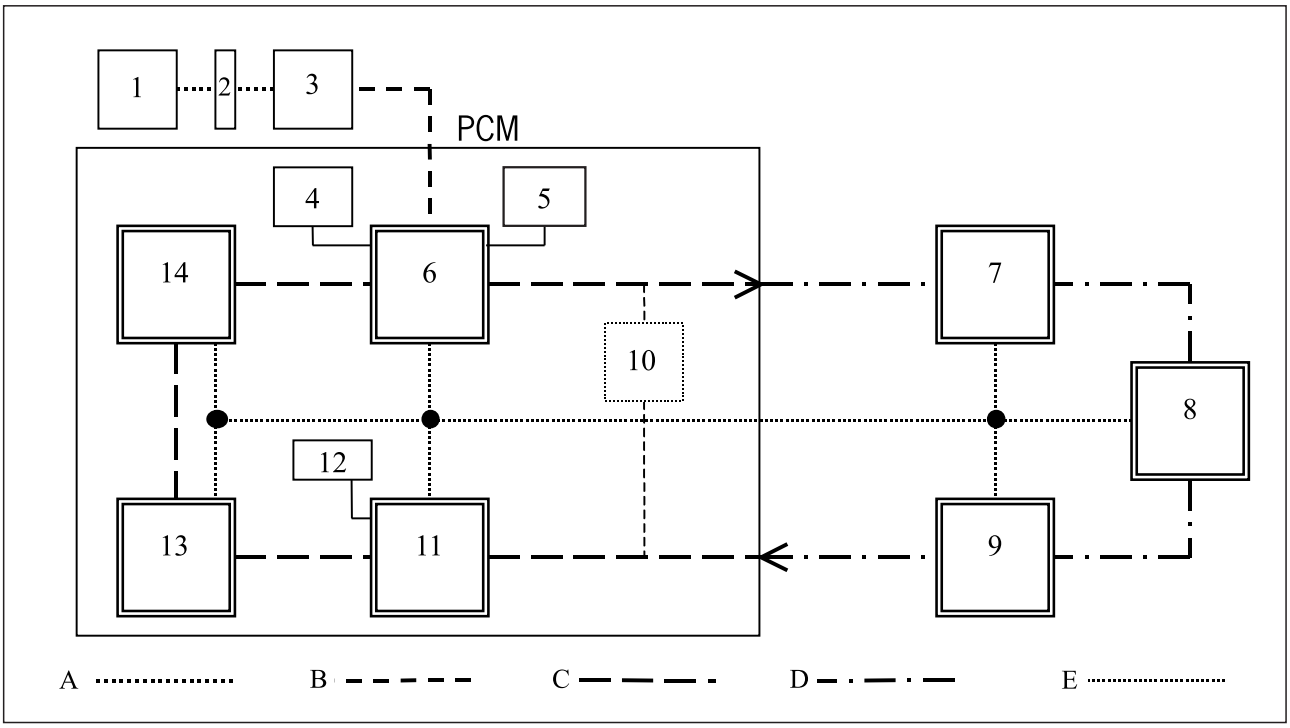

A - K lead
B - CAN comfort
C - Electrical MOST (internal)
D - Optical MOST (external)
E - MOST diagnosis lead
1 - 9588 Porsche System Tester II
2 - Diagnostic box
3 - Instrument cluster (gateway)
4 - PCM2 (internal amplifier)
5 - PCM2 (tuner)
6 - PCM2 (gateway) (MOST nodes)
7 - External amplifier (MOST nodes)
8 - CDC (CD changer) (MOST nodes)
9 - Telephone/telematics (MOST nodes)
10 - PCM2 (MOST switch)
11 - MMI (Man Machine Interface) (MOST nodes)

12 - PCM2 single CD

13 - Navigation (MOST nodes)

14 - VOCS (voice control system) (MOST nodes)

Gateway

The gateway is integrated in the PCM2. Together with the MMI, it is a fixed component of each PCM2. It provides a connection to CAN comfort via its nodes. Diagnostic and useful data is exchanged with the CAN via these nodes.

It creates links to the following systems:

- CAN comfort
- Media Oriented Systems Transport (MOST), internal (electrical)
- Voice control system (VOCS) (optional/insertion)
- Navigation (optional/insertion)
- Man Machine Interface (MMI)
- Single CD
- Media Oriented Systems Transport (MOST), external bus (optical)
- Amplifier optional (Harman or BOSE)
- CD changer
- Telephone/telematics

Identification

The diagnosis software number and the part numbers for the PCM2 can be read out under this menu item.

1. 9588 Connect and start the Porsche System Tester II and switch on the ignition.
2. Select vehicle type 911 (996) and the PCM2 control module and press the [>>] key.
3. Select the "Identification" menu item and press the [>>] key.
4. "Diagnosis software number; PCM2 part number" appear on the display.

Actual values

The menu item 'Actual values' enables the following values to be displayed.

- Blower speed, air-conditioning.
- MOST - optical.
- MOST data transfer fault.
- Supply voltage

Note!

Using the function 'Reset all coding/transfer counters' all set fault counters of all components can be collectively reset to '0'.

Menu item	Function
♦ Blower speed, air-conditioning	Using this menu item, you can call up the speed of the blower for the air conditioning equipment. ♦ 9588 Connect and start the Porsche System Tester II and switch on the ignition. ♦ Select vehicle type 911 (996) and the PCM2-GW control module and press the [>>] key. ♦ Select the Actual values menu item and press the [>>] key. ♦ Select the "Blower speed, air-conditioning" menu item using the [>] key and press the [>>] key. ♦ Read out values from the display field.
♦ MOST optical	You can read out the MOST optical (aborts when docking on an optical system) of the MOST control modules. ♦ 9588 Connect and start the Porsche System Tester II and switch on the ignition. ♦ Select vehicle type 911 (996) and the PCM2-GW control module and press the [>>] key. ♦ Select the Actual values menu item and press the [>>] key. ♦ Select the "Optical" menu item using the [>] key and press the [>>] key. ♦ Read out values from the display field.
♦ MOST data transfer fault	Under this menu item, it is possible to check the electrical and optical MOST during troubleshooting. ♦ 9588 Connect and start the Porsche System Tester II and switch on the ignition. ♦ Select vehicle type 911 (996) and the PCM2-GW control module and press the [>>] key. ♦ Select the Actual values menu item and press the [>>] key. ♦ Select the "MOST speed, data transfer fault" menu item using the [>] key and press the [>>] key. ♦ Read out values from the display field.

Menu item	Function
♦ Supply voltage	Under this menu item, it is possible to check the electrical and optical MOST during troubleshooting. ♦ 9588 Connect and start the Porsche System Tester II and switch on the ignition. ♦ Select vehicle type 911 (996) and the PCM2-GW control module and press the [>>] key. ♦ Select the Actual values menu item and press the [>>] key. ♦ Select the "Supply voltage" menu item using the [>] key and press the [>>] key. ♦ Read out values from the display field.

Man Machine Interface (MMI)

The MMI is part of the PCM2 (on the mainboard). It carries out the diagnostics of the ring break diagnosis line (stub cable) and the diagnostics of the optical distribution line.

MOST actual and required installed components lists

All MOST control modules that are connected to the PCM2 are entered via diagnostic tester in the 'required installed components list'. Only the MOST control units recorded in the MOST required installed components list are activated. An 'actual installed components list' of detected devices is written and saved when the PCM2 is started.

MOST component check

Note!

When there is a customer complaint or identifiable problems but no fault code entries, firstly the 'MOST component check' is to be selected in the PCM2 function selection menu and then the 'MOST system check' is to be carried out.

The MOST component check can be reached via the menu PCM2 function selection. This comprises a summary of the following check processes:

- Data transmission check.
- MOST system check (with engine running).
- Ring break diagnosis (with engine running).

The MOST components check 'MOST system check' is to be carried out when the display indicates 'unavailable MOST control modules'.

If no fault code is stored, the '*' symbol indicates a 'varying required and actual installed components list' in the Control modules menu in front of the 'PCM2' system and in the 'PCM2 MMI function selection' in front of the selection 'MOST required installed components list'. A comparison of these two lists can determine faulty components.

Data transmission check

Note!

Using the function 'Reset all coding/transfer counters' all set fault counters of all components can be collectively reset to '0'.

Menu item	Function
♦ Data transmission check	Using this menu item, the quality of the data transmission can be assessed. This is a counter which leads to an increase in the value if faults occur within a certain time period. The check is carried out continuously at predetermined intervals. ♦ 9588 Connect and start the Porsche System Tester II and switch on the ignition. ♦ Select '911 Turbo (996)' in the Vehicle type menu and confirm with the [>>] key. ♦ Select 'PCM2' in the Control modules menu and confirm with the [>>] key. ♦ Select 'MOST components check' in the PCM2 function selection and confirm with the [>>] key. ♦ Select "Data transmission check" in the 911 Turbo (996) PCM2 MOST components check function selection and confirm with the [>>] key.

MOST system check (with engine running)

Menu item	Function
♦ MOST system check (with engine running).	Using this menu item, a MOST system check can be carried out with the ignition on. The following checks are carried out automatically and their results are displayed. ♦ Gateway start-up condition is read out. ♦ MOST installed components list (required and actual installed components list) is analysed. ♦ Ring line diagnosis. ♦ 9588 Connect and start the Porsche System Tester II and switch on the ignition. ♦ Select '911 Turbo (996)' in the Vehicle type menu and confirm with the [>>] key. ♦ Select 'PCM2' in the Control modules menu and confirm with the [>>] key. ♦ Select 'MOST components check' in the PCM2 function selection and confirm with the [>>] key. ♦ Select "MOST system check" in the 911 Turbo (996) PCM2 MOST components check function selection and confirm with the [>>] key. ♦ Follow the Tester instructions. Whenever there are several ring breaks, the 1st ring break is displayed in the following order: ♦ PCM2 Gateway > external amplifier. ♦ External amplifier > CD changer. ♦ CD changer > telephone. ♦ Telephone > PCM2 MMI. is displayed. Then the check is terminated. ♦ Start the optical performance check.

Ring break diagnosis (with engine running)

Menu item	Function
♦ Ring break diagnosis (with engine running).	Using this menu item, a ring break diagnosis can be carried out (with the engine running). ♦ 9588 Connect and start the Porsche System Tester II and switch on the ignition. ♦ Select '911 Turbo (996)' in the Vehicle type menu and confirm with the [>>] key. ♦ Select 'PCM2' in the Control modules menu and confirm with the [>>] key. ♦ Select 'MOST components check' in the PCM2 function selection and confirm with the [>>] key. ♦ Select "Ring break diagnosis (when the engine is running)" in the 911 Turbo (996) PCM2-GW MOST components check function selection and confirm with the [>>] key.

MOST lock/unlock

A lock occurs when the signal sent from the MMI via the MOST optical/electrical is understood and answered by the connected MOST control modules. This applies a correct optical MOST signal. The lock is maintained until the signal is no longer detectable for a longer period of time (several µseconds) 'unlock'. Interruptions occur in the system if perfect communication is no longer possible. If the relevant threshold values are exceeded, an entry is recorded in the appropriate control module and the 'optical' is incremented.

Note!

Using the function 'Reset all coding/transfer counters' all set fault counters of all components can be collectively reset to '0'.

MOST - optical/electrical

MOST signals are transferred electrically within the PCM/CDR23 and optically outside of the PCM/CDR23. Internally, the PCM2 consists of at least 2 nodes (GW and MMI), which are installed in the device and can also be expanded to four nodes by adding the navigation and VOCS nodes. Internally, the CDR23 consists of one node (GW) which is installed in the CDR23.

The data is transferred outside of the PCM2 via the optical waveguide, which creates a connection to the nodes in the external MOST control modules such as external amplifiers, CD changers, and/or telephone/telematics (depending on the equipment). The data is transferred outside of the CDR23 via the optical waveguide,

which creates a connection to the nodes in the external MOST control modules such as external amplifiers and/or CD changers (depending on the equipment). The gateway node represents the connection to CAN Comfort.

MOST switch

The MOST - switch - switch is part of the PCM2. It keeps the electrical MOST closed if no other MOST control unit is optically connected to the MOST. The MOST switch is opened when a light signal is received from the connected MOST control modules.

The following settings can be coded:

- MOST switch open.
- MOST switch closed.

Note!

- *When the PCM2 is replaced, the coding must be performed in accordance with the connected MOST control modules.*
- *When the 'Switch closed' parameter is set, the switch remains closed even in existing MOST control modules. Communication is then not possible.*

Navigation

The navigation module is designed as a module box, which can be inserted in the PCM2 as an option. After the insertion, an electronic switch is opened automatically and the module is integrated into the MOST ring.

Ring break diagnosis line

The diagnosis distribution line is an electrical lead, which, as a stub cable, connects the individual MOST control modules in the system with one another. The existing MOST control modules are checked at regular intervals during communication with the control modules via the electrical/optical MOST.

Input signals

The following queries can be run using this menu item:

- Tuner parameters.
- Registry startup status.
- Internal ring startup status.
- External ring startup status.

Note!

Deactivate the 'automatic traffic announcement' before performing the diagnosis on the PCM2. If this is not done, the diagnosis will abort (only applicable to version number < 03).

Menu item	Function
♦ Tuner parameters	Using this menu item, you can code the tuner parameters. ♦ 9588 Connect and start the Porsche System Tester II and switch on the ignition. ♦ Select vehicle type 911 (996) and the PCM2-GW control module and press the [>>] key. ♦ Select the Input signals menu item and press the [>>] key. ♦ Select the "Tuner parameters" menu item using the [>] key and press the [>>] key. ♦ Read out values from the display field.
♦ Registry startup status	It is displayed under this menu item that installed MOST control modules can be read out from the actual installed components list. ♦ 9588 Connect and start the Porsche System Tester II and switch on the ignition. ♦ Select vehicle type 911 (996) and the PCM2-GW control module and press the [>>] key. ♦ Select Input signals and press the [>>] key ♦ Select the "Registry startup status" menu item using the [>] key and press the [>>] key. ♦ Read out values from the display field.
♦ Internal ring startup status	It is displayed under this menu item that installed MOST control modules in the internal ring can be read out from the actual installed components list. ♦ 9588 Connect and start the Porsche System Tester II and switch on the ignition. ♦ Select vehicle type 911 (996) and the PCM2-GW control module and press the [>>] key. ♦ Select the Input signals menu item and press the [>>] key. ♦ Mark the "Internal ring startup status" menu item using the [>] key and press the [>>] key. ♦ Read out values from the display field.

Menu item	Function
♦ External ring startup status	It is displayed under this menu item that installed MOST control modules on the external ring can be read out from the actual installed components list. ♦ 9588 Connect and start the Porsche System Tester II and switch on the ignition. ♦ Select vehicle type 911 (996) and the PCM2-GW control module and press the [>>] key. ♦ Select the Input signals menu item and press the [>>] key. ♦ Mark the "External ring startup status" menu item using the [>] key and press the [>>] key ♦ Read out values from the display field.

Single CD

The CD player is part of the PCM2. It is used to update the navigation system.

Voice control system (VOCS)

The VOCS is designed as a module box which can be pushed into the PCM2 (optional). After the insertion, an electronic switch is opened and the module is integrated into the MOST ring.

Drive links

Drive links of the PCM2 can be activated with this menu item. This allows the function of the drive links to be assessed very quickly.

The following drive links can be activated with the 9588 Porsche System Tester II:

- MOST bus switch on
- MOST bus switch off
- MOST power reduction - start
- MOST power reduction - stop
- Output switch on
- Output switch off
- Volume - minimum value
- Volume - centre position
- Volume - maximum value
- Front fader
- Middle fader
- Rear fader

- Left balance
- Central balance
- Right balance
- Bass - minimum value
- Bass - centre position
- Bass - maximum value
- Treble - minimum value
- Treble - centre position
- Treble - maximum value
- MOST switch open
- MOST switch closed
- Mute off
- Mute on

The subsequent note does not apply to the following:

- MOST bus switch
- MOST power reduction

Note!

The activated drive link is automatically switched off after approximately 20 seconds.

PCM2 control module (head unit)

The PCM2 control unit (head unit) includes the following components:

Internal:

PCM2 gateway

PCM2 Man Machine Interface (MMI)

Amplifier (internal)

Tuner

Single CD

Navigation (optional/insertion)

VOCS (voice control system) (optional/insertion)

Controller Area Network (CAN) Comfort

MOST switch

External:

External amplifier (optional, Harman or BOSE)

Telephone/telematics (optional)

CD changer (CDC), (optional)

The PCM2 consists of at least two but a maximum of four MOST nodes, (Gateway, MMI and Navigation and VOCS (optional)), which communicate with each other via the electronic MOST. Data is transferred outside of the PCM2 via the optical MOST.

Telephone/telematics

The telephone/telematics feature is available as an option and is linked to the PCM2 via the optical waveguide.

Tuner

The tuner is part of the PCM2 (on the main board).

External amplifier

The external amplifier (Harman or BOSE) is available as an optional feature and is linked to the PCM2 via the optical waveguide.

Internal amplifier

The internal amplifier is part of the PCM2 (installed on the main board).

Wake-up function

In an idle state, all control modules that are connected to the MOST are in sleep mode. When the PCM2 is switched on, a light is switched on via the MMI. It is reinforced and passed on by the MOST control modules that are connected.

Fault overview - external BOSE amplifier

Fault code	Fault text	Fault effect
8001	Supply voltage	Failure
8002	External amplifier faulty	Failure
8003	Front loudspeaker channel faulty	Can only be operated under certain conditions
8004	Rear loudspeaker channel faulty	Can only be operated under certain conditions
8005	Left subwoofer channel faulty	Can only be operated under certain conditions
8009	Coding/Programming	Can only be operated under certain conditions
800A	Microphone signal faulty	Can only be operated under certain conditions
800B	Microphone signal faulty	Can only be operated under certain conditions
8011	Front left loudspeaker faulty	Can only be operated under certain conditions
8012	Front right loudspeaker faulty	Can only be operated under certain conditions
8013	Rear left and right loudspeakers faulty	Can only be operated under certain conditions
8014	Rear left and right loudspeakers faulty	Can only be operated under certain conditions
8015	Left door loudspeaker faulty	Can only be operated under certain conditions
8016	Right door loudspeaker faulty	Can only be operated under certain conditions
8017	Subwoofer faulty	Can only be operated under certain conditions

8001 External BOSE amplifier

Supply voltage

Diagnostic conditions

- Ignition on
- PCM2/CDR23 on

Note!

♦

≥

♦

Possible cause of fault

- ♦ Battery positive voltage too low '< 9 V for > 20 sec'
- ♦ Battery positive voltage too high '> 16 V for > 5 sec.'
- ♦ Fuse faulty.
- ♦ Check battery.
- ♦ Generator regulator faulty
- ♦ Generator faulty

Affected pin

PCM2 plug A, pin 1, pin 2

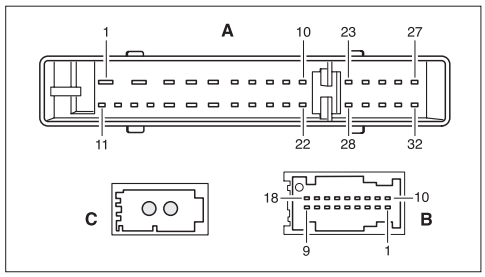

Battery voltage too low

Diagnosis/troubleshooting

Work instruction			Display OK	If not OK
1	Check battery	♦ Examine battery	⇒ Step 2	Charge or replace battery → End
2	Check fuse	♦ Check fuse D9 to the external BOSE amplifier	⇒ Step 3	Replace fuse → End
3	Check power supply at pin 30	♦ Switch ignition off ♦ Pull off plug A on the external BOSE amplifier ♦ Switch ignition on ♦ Measure voltage on plug A on the external BOSE amplifier between pin 1 and ground ♦ Switch ignition on	Battery positive voltage ⇒ Step 4	Corrosion in the plug connection or contact resistance in the supply lead check and repair wiring harness → End
4	Check ground lead	♦ Switch off ignition ♦ Measure resistance on plug A on the external BOSE amplifier between pin 2 and ground	< 5 Ω ⇒ Step 5	Check ground points or corrosion in the plug connection or contact resistance in the supply lead; check and repair wiring harness → End
5	Replace external BOSE amplifier		→ End	

Battery voltage too high

Diagnosis/troubleshooting

Work instruction			Display OK	If not OK
1	Check power supply at pin 30	♦ Switch off ignition ♦ Pull off plug A on the external BOSE amplifier ♦ Switch ignition on ♦ Start engine and allow it to run at a speed > 2,000 rpm ♦ Measure voltage on plug A on the external BOSE amplifier between pin 1 and ground	Battery positive voltage 11.4 to 14.5 V ⇒ Step 2	Wiring/regulator or diodes faulty Repair wires or generator → End

2	Erase fault memory, read it out again	♦ Switch ignition off and remove ignition key ♦ Switch on ignition again, perform a test drive ♦ Read out fault code again once the test drive has been performed	→ End	⇒ Step 3
3	Replace external BOSE amplifier		→ End	

8002 External BOSE amplifier

Malfunction in internal memory

Diagnostic conditions

- Ignition on
- PCM2/CDR23 on

Note!

♦

≥

♦

Possible cause of fault

- ♦ EEPROM fault
- ♦ Memory faulty

Note!

♦

♦

♦

♦

♦

Affected pins

-

Diagnosis/troubleshooting on the external amplifier

Work instruction			Display OK	If not OK
1	Read out PCM2 fault memory	♦ Connect the Porsche System Tester II No. 9588 to the diagnostic socket; switch on the ignition and the Porsche System Tester II No. 9588 ♦ Select vehicle type 911 Turbo (996) and start the automatic control module search ♦ In the Control units menu, select 'PCM2' ♦ Select 'External amplifier' in the PCM2 menu and confirm with the (>>) key ♦ Make a selection in the 'Fault memory' menu and start with the (>>) key ♦ Read out fault memory ♦ Erase fault memory ♦ Remove ignition key and switch on ignition again ♦ Read out fault memory again ♦ Extract ambient data, press the (>>) key	The fault is remedied → End	⇒ Step 2
2	♦ Replace external BOSE amplifier		→ End	

8003 External BOSE amplifier

Fault in front left loudspeaker channel/left door speaker

Diagnostic conditions

- Ignition on
- PCM2/CDR23 on

Note!

♦

≥

♦

Possible cause of fault

- ♦ Short circuit to B+/ground in the wiring harness
- ♦ Short circuit - loudspeaker faulty
- ♦ Short circuit - amplifier faulty

Affected pin

External BOSE amplifier, plug A, pin 24, pin 29, pin 25, pin 38

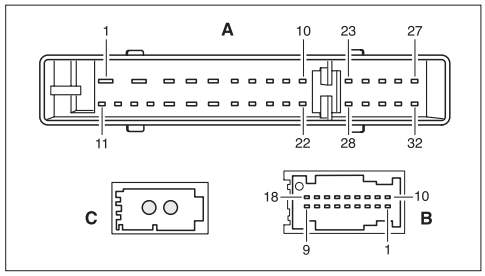

Diagnosis/troubleshooting – BOSE

Work instruction			Display OK	If not OK
1	Check the front left wiring harness and loudspeaker and the left door speaker	♦ Connect the Porsche System Tester II No. 9588 to the diagnostic socket; switch on the ignition and the Porsche System Tester II No. 9588 ♦ Select vehicle type 911 Turbo (996) and start the automatic control module search ♦ In the Control units menu, select 'PCM2' ♦ In the PCM2 menu, select 'External amplifier' ♦ Make a selection in the 'Fault memory' menu and start with the [>>] key ♦ Read out fault memory ♦ Erase fault memory ♦ Remove ignition key and switch on ignition again ♦ Read out fault memory ♦ Extract ambient data, press the [>>] key	→ End	Fault code is still displayed ⇒ Step 2
2	Check the front left wiring harness and loudspeaker and the left door speaker	♦ Switch off ignition ♦ Pull off plug A on the amplifier ♦ Check resistance on plug A, pins 27 and 32	= 5 Ω ⇒ Step 3	⇒ Step 4
3	Check the front left wiring harness and loudspeaker and the left door speaker	♦ Switch off ignition ♦ Pull off plug A on the amplifier ♦ Measure resistance on plug A, pins 25 and 38	= 4 Ω ⇒ Step 10	⇒ Step 4
4	Check the wiring harness to the front left door speaker and the left door speaker	♦ Pull off the plugs on the loudspeakers ♦ Check the resistance in the wire between pin 32 on plug A of the amplifier and pin 2 of the plug for the front right door loudspeaker	< 5 Ω Step 5	Open circuit in the wire/short circuit to ground. Repair wiring harness → End
5	Check the wiring harness to the front left door speaker and the left door speaker	♦ Check the resistance in the wire between pin 27 on plug A of the amplifier and pin 1 of the plug for the front right door loudspeaker	< 5 Ω ⇒ Step 8	Open circuit in the wire/short circuit to ground. Repair wiring harness → End

Work instruction			**Display OK**	**If not OK**
6	Check the wiring harness to the front left door speaker and the left door speaker	♦ Check the resistance in the wire between pin 25 on plug A of the amplifier and pin 2 of the plug for the front left door loudspeaker	< 5 Ω ⇒ Step 7	Open circuit in the wire/short circuit to ground. Repair wiring harness → End
7	Check wiring harness to the front left door speaker	♦ Check the resistance in the wire between pin 38 on plug A of the amplifier and pin 1 of the plug for the front left door loudspeaker	< 5 Ω ⇒ Step 9	Open circuit in the wire/short circuit to ground. Repair wiring harness → End
8	Replace front left loudspeaker		→ End	⇒ Step 10
9	Replace front left door speaker		→ End	⇒ Step 10
10	Replace amplifier		→ End	

8004 BOSE external amplifier

Rear loudspeaker channel faulty

Diagnostic conditions

- Ignition on
- PCM2/CDR23 on

!

- *The fault memory status (present/not present) is always updated when the motor is running.*
- *Fault code 8003 is recorded in the PCM2 MMI if the operating buttons are actuated for longer than ≥1 minute'.*
- *Deactivate the 'automatic traffic announcement' before performing the diagnosis on the PCM2. If this is not done, the diagnosis will abort.*

Possible cause of fault

- Open circuit, high contact resistance or short circuit to B+/ ground in wiring harness
- Speaker faulty
- Amplifier faulty

Affected pin

BOSE external amplifier plug A, pin 23, pin 24, pin 26, pin 28.

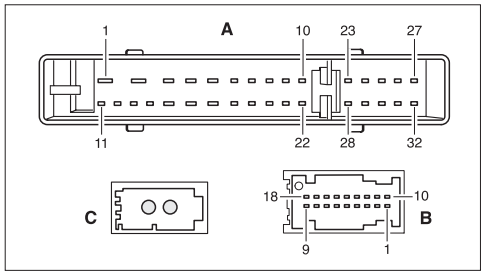

Diagnosis/Troubleshooting BOSE

Work instruction			Display OK	If not OK
1	Reading out external amplifier fault memory	♦ Connect the Porsche System Tester II No. 9588 to the diagnostic socket; switch on the ignition and the Porsche System Tester II No. 9588. ♦ Select vehicle type 911 (996) and start the automatic control module search. ♦ Select 'PCM2' in the "Control units" menu. ♦ Select 'External amplifier' in the PCM2 menu. ♦ Select 'Fault memory' in the menu and click the [> >] key. ♦ Read out fault memory. ♦ Erase fault memory. ♦ Remove ignition key and switch on ignition again. ♦ Read out fault memory. ♦ Extract ambient data, press the [>>] key.	→ End	Fault code is still displayed. ⇒ Step 2
2	Checking wiring harness and front right loudspeaker	♦ Switch off ignition. ♦ Pull plug A off the amplifier. ♦ Measure resistance on plug A pin 29 and pin 24.	= 4 Ω ⇒ Step 3	Open circuit in wiring/short circuit to ground. ⇒Repair wiring harness. ⇒ Step 4
3	Checking wiring harness and rear left and right loudspeakers	♦ Switch off ignition. ♦ Pull plug A off the amplifier ♦ Check resistance on plug A pin 23 and pin 28.	< 0.5 Ω ⇒ Step 4	⇒ Step 6
4	Checking wiring harness of front right loudspeaker	♦ Pull plug off loudspeaker. ♦ Check resistance of plug A of amplifier pin 26 to plug on front right door speaker pin 2.	< 0.5 Ω ⇒ Step 5	Repair wiring harness. → End
5	Checking wiring harness of front right loudspeaker	♦ Pull plug off loudspeaker. ♦ Check resistance of plug A of amplifier pin 31 to plug on front right door speaker pin 1.	< 0.5 Ω ⇒ Step 8	Repair wiring harness. → End
6	Checking wiring of rear right and left loudspeakers	♦ Check resistance of plug A of amplifier pin 23 to plug on rear left and right loudspeakers pin 3.	< 0.5 Ω ⇒ Step 7	Open circuit in wiring/short circuit to ground. Repair wiring harness. → End

Work instruction			Display OK	If not OK
7	Checking wiring of rear right and left loudspeakers	♦ Check resistance in wiring of plug A of amplifier pin 28 to plug on rear left and right loudspeakers pin 4.	< 0.5 Ω ⇒ Step 9	Open circuit in wiring/short circuit to ground. Repair wiring harness. → End
8	Replacing front right loudspeaker		→ End	⇒ Step 10
9	Replacing rear left and right loudspeakers		→ End	⇒ Step 10
10	Replacing amplifier		→ End	

8005 External BOSE amplifier

Malfunction in rear left loudspeaker channel/right door speaker

Diagnostic conditions

- Ignition on.
- PCM2/ CDR 23 ON.

Note!

-
  ∋≥
-

Possible cause of fault

- Open circuit, contact resistance, or short circuit to B+/ground in the wiring harness
- Loudspeaker faulty
- Amplifier faulty

Affected pin

External BOSE amplifier, plug A, pin 24, pin 29, pin 25, pin 38

Bose diagnosis/troubleshooting

Work instruction			Display OK	If not OK
1	Check the rear left and right wiring harness and loudspeakers and the right door speaker	♦ Connect the Porsche System Tester II No. 9588 to the diagnostic socket; switch on the ignition and the Porsche System Tester II No. 9588 ♦ Select vehicle type 911 Turbo (996) and start the automatic control module search ♦ In the Control units menu, select 'PCM2' ♦ In the PCM2 menu, select 'External amplifier' ♦ Make a selection in the 'Fault memory' menu and start with the [>>] key ♦ Read out fault memory ♦ Erase fault memory ♦ Remove ignition key and switch on ignition again ♦ Read out fault memory ♦ Extract ambient data, press the [>>] key	→ End	Fault code is still displayed ⇒ Step 2
2	Check wiring harness and loudspeaker for the right door speaker	♦ Switch off ignition ♦ Pull off plug A on the amplifier ♦ Measure resistance on plug A, pins 26 and 31	= 4 Ω ⇒ Step 10	⇒ Step 4
3	Check the rear left and right wiring harness and loudspeakers	♦ Switch off ignition ♦ Pull off plug A on the amplifier ♦ Check resistance on plug A, pins 23 and 28	= 4 Ω ⇒ Step 3	⇒ Step 6
4	Check right door speaker wire	♦ Pull off the plugs on the loudspeakers ♦ Check the resistance in the wire between pin 26 on plug A of the amplifier and pin 2 of the plug for the front right door loudspeaker	< 5 Ω Step 5	Open circuit in the wire/short circuit to ground. Repair wiring harness → End
5	Check right door speaker wire	♦ Check the resistance in the wire between pin 31 on plug A of the amplifier and pin 1 of the plug for the front right door loudspeaker	< 5 Ω ⇒ Step 8	Open circuit in the wire/short circuit to ground. Repair wiring harness → End

Work instruction			**Display OK**	**If not OK**
6	Check the rear left and right loudspeaker wire	♦ Check the resistance in the wire between pin 23 on plug A of the amplifier and pin 3 of the plug for the rear left and right loudspeaker	< 0.5 Ω ⇒ Step 7	Open circuit in the wire/short circuit to ground. Repair wiring harness → End
7	Check the rear left and right loudspeaker wire	♦ Check the resistance in the wire between pin 28 on plug A of the amplifier and pin 4 of the plug for the rear left and rear right loudspeaker	< 0.5 Ω ⇒ Step 9	Open circuit in the wire/short circuit to ground. Repair wiring harness → End
8	Replace front left loudspeaker		→ End	⇒ Step 10
9	Replace the rear left and right loudspeakers		→ End	⇒ Step 10
10	Replace amplifier		→ End	

8009 External BOSE amplifier

Incorrect coding/programming

Diagnostic conditions

- Ignition on.
- PCM2/ CDR 23 ON.

Note!

♦

∋≥

♦

Possible cause of fault

- ♦ Open circuit, contact resistance, or short circuit to B+/ground in the wiring harness
- ♦ Loudspeaker faulty
- ♦ Amplifier faulty

Affected pin

-

Diagnosis/troubleshooting BOSE

Work instruction			Display OK	If not OK
1	Coding of the vehicle type	♦ Connect the Porsche System Tester II No. 9588 to the diagnostic socket; switch on the ignition and the Porsche System Tester II No. 9588 ♦ Select vehicle type 911 Turbo (996) and start the automatic control module search ♦ In the Control units menu, select 'PCM2' ♦ In the PCM2 menu, select 'External amplifier' ♦ Select 'Coding' in the menu and start with the [>>] key ♦ Perform the coding in accordance with the instructions of the Porsche System Tester II No. 9588	→ End	

800A External BOSE amplifier

Microphone signal faulty

Diagnostic conditions

- Ignition on
- PCM2/CDR23 on

Note!

♦

э≥

♦

Possible cause of fault

♦ No signal is emitted from the microphone

Affected pin

Amplifier control module, plug B, pins 1 and 10

Diagnosis/troubleshooting

Work instruction			Display OK	If not OK
1	Check wiring harness to the microphone	♦ Switch off ignition ♦ Pull off plug B on the amplifier ♦ Measure resistance on plug B between pin 1 and pin 10	< 0.5 Ω ⇒ Step 9	⇒ Step 2
2	Check wire between amplifier and microphone	♦ Pull off plug on the microphone ♦ Check the resistance in the wire between pin 1 on plug B of the amplifier and pin 3 of the plug on the microphone	< 0.5 Ω ⇒ Step 3	Open circuit in the wire/short circuit to ground. Repair wiring harness → End
3	Check wire between amplifier and microphone	♦ Pull off plug on the microphone ♦ Check the resistance in the wire between pin 10 on plug B of the amplifier and pin 4 of the plug on the microphone	< 0.5 Ω ⇒ Step 4	Open circuit in the wire/short circuit to ground. Repair wiring harness → End

Work instruction			Display OK	If not OK
4	Check line for short circuit to ground	♦ Pull off plug on the microphone ♦ Check the resistance in the wire between pin 1 on plug B of the amplifier and ground	∞ 0.5 Ω ⇒ Step 5	Open circuit in the wire/short circuit to ground. Repair wiring harness → End
5	Check line for short circuit to ground	♦ Pull off plug on the microphone ♦ Check the resistance in the wire between pin 10 on plug B of the amplifier and ground	∞ 0.5 Ω Step 6	Open circuit in the wire/short circuit to ground. Repair wiring harness → End
6	Check line for short circuit to B+	♦ Check the voltage in the wire between pin 1 on plug B of the amplifier and ground ♦ Switch ignition on	0 V ⇒ Step 7	Open circuit in the wire/short circuit to ground. Repair wiring harness → End
7	Check line for short circuit to B+	♦ Check the voltage in the wire between pin 10 on plug B of the amplifier and ground ♦ Switch ignition on	0 V ⇒ Step 8	Open circuit in the wire/short circuit to ground. Repair wiring harness → End
8	Replace microphone	Replace microphone	→ End	
9	Replace BOSE amplifier control module	Replace BOSE amplifier control module	→ End	

800B External BOSE amplifier

Microphone signal faulty

Diagnostic conditions

- Ignition on
- PCM2/ CR 23 ON

Note!

♦

♦

♦

Possible cause of fault

♦ No signal is emitted from the microphone

Affected pin

Amplifier control module, plug B, pins 1 and 10

Diagnosis/troubleshooting

Work instruction			Display OK	If not OK
1	Check wiring harness to the microphone	♦ Switch off ignition ♦ Pull off plug B on the amplifier ♦ Measure resistance on plug B between pin 1 and pin 10	< 0.5 Ω ⇒ Step 9	⇒ Step 2
2	Check wire between amplifier and microphone	♦ Pull off plug on the microphone ♦ Check the resistance in the wire between pin 1 on plug B of the amplifier and pin 3 of the plug on the microphone	< 0.5 Ω ⇒ Step 3	Open circuit in the wire/short circuit to ground. Repair wiring harness → End
3	Check wire between amplifier and microphone	♦ Pull off plug on the microphone ♦ Check the resistance in the wire between pin 10 on plug B of the amplifier and pin 4 of the plug on the microphone	< 0.5 Ω ⇒ Step 4	Open circuit in the wire/short circuit to ground. Repair wiring harness → End

Work instruction			Display OK	If not OK
4	Check line for short circuit to ground	♦ Pull off plug on the microphone ♦ Check the resistance in the wire between pin 1 on plug B of the amplifier and ground	∞ 0.5 Ω ⇒ Step 5	Open circuit in the wire/short circuit to ground. Repair wiring harness → End
5	Check line for short circuit to ground	♦ Pull off plug on the microphone ♦ Check the resistance in the wire between pin 10 on plug B of the amplifier and ground	∞ 0.5 Ω Step 6	Open circuit in the wire/short circuit to ground. Repair wiring harness → End
6	Check line for short circuit to B+	♦ Check the voltage in the wire between pin 1 on plug B of the amplifier and ground ♦ Switch ignition on	0 V ⇒ Step 7	Open circuit in the wire/short circuit to ground. Repair wiring harness → End
7	Check line for short circuit to B+	♦ Check the voltage in the wire between pin 10 on plug B of the amplifier and ground ♦ Switch ignition on	0 V ⇒ Step 8	Open circuit in the wire/short circuit to ground. Repair wiring harness → End
8	Replace microphone	Replace microphone	→ End	
9	Replace BOSE amplifier control module	Replace BOSE amplifier control module	→ End	

8011 External BOSE amplifier

Malfunction in front left loudspeaker

Diagnostic conditions

- Ignition on
- PCM2/ CDR 23 ON

Note!

♦

≥

♦

♦

Possible cause of fault

- ♦ Wiring harness/front left loudspeaker faulty
- ♦ External BOSE amplifier output stage faulty

Affected pin

Amplifier control module, plug A, pins 27 and 32

Diagnosis/troubleshooting

Work instruction			Display OK	If not OK
1	Check wiring harness and front left loudspeaker	♦ Connect the Porsche System Tester II No. 9588 to the diagnostic socket; switch on the ignition and the Porsche System Tester II No. 9588 ♦ Select vehicle type 911 (996) and start the automatic control module search ♦ In the Control units menu, select 'PCM2' ♦ In the PCM2 menu, select 'External amplifier' ♦ Make a selection in the 'Fault memory' menu and start with the [>>] key ♦ Read out fault memory ♦ Erase fault memory ♦ Remove ignition key and switch on ignition again ♦ Read out fault memory ♦ Extract ambient data, press the [>>] key	→ End	Fault code is still displayed ⇒ Step 2
2	Check wiring harness and front left loudspeaker	♦ Switch off ignition ♦ Pull off plug A on the amplifier ♦ Check resistance on plug A, pins 27 and 32	= 5 Ω ⇒ Step 6	⇒ Step 3
3	Check wiring harness to front left loudspeaker	♦ Pull off the plugs on the loudspeakers ♦ Check the resistance in the wire between pin 32 on plug A of the amplifier and pin 2 of the plug for the front right door loudspeaker	< 5 Ω Step 4	Open circuit in the wire/short circuit to ground. Repair wiring harness → End
4	Check wiring harness to front left loudspeaker	♦ Check the resistance in the wire between pin 27 on plug A of the amplifier and pin 1 of the plug for the front right door loudspeaker	< 5 Ω ⇒ Step 5	Open circuit in the wire/short circuit to ground. Repair wiring harness → End
5	Replace front left loudspeaker		→ End	⇒ Step 6
6	Replace amplifier		→ End	

8012 External BOSE amplifier

Malfunction in front right loudspeaker

Diagnostic conditions

- Ignition on
- PCM2/ CR 23 ON

Note!

♦

≥

♦

♦

Possible cause of fault

- ♦ Wiring harness/front right loudspeaker faulty
- ♦ External BOSE amplifier output stage faulty

Affected pin

Amplifier control module, plug A, pins 24 and 29

Diagnosis/troubleshooting

Work instruction			Display OK	If not OK
1	Check wiring harness and front right loudspeaker	♦ Connect the Porsche System Tester II No. 9588 to the diagnostic socket; switch on the ignition and the Porsche System Tester II No. 9588 ♦ Select vehicle type 911 Turbo (996) and start the automatic control module search ♦ In the Control units menu, select 'PCM2' ♦ In the PCM2 menu, select 'External amplifier' ♦ Make a selection in the 'Fault memory' menu and start with the [>>] key ♦ Read out fault memory ♦ Erase fault memory ♦ Remove ignition key and switch on ignition again ♦ Read out fault memory ♦ Extract ambient data, press the [>>] key	→ End	Fault code is still displayed ⇒ Step 2
2	Check wiring harness and front right loudspeaker	♦ Switch off ignition ♦ Pull off plug A on the amplifier ♦ Check resistance on plug A, pins 24 and 29	= 5 Ω ⇒ Step 6	⇒ Step 3
3	Check wiring harness to front right loudspeaker	♦ Pull off the plugs on the loudspeakers ♦ Check the resistance in the wire between pin 24 on plug A of the amplifier and pin 1 of the plug for the front right door loudspeaker	< 5 Ω Step 4	Open circuit in the wire/short circuit to ground. Repair wiring harness → End
4	Check wiring harness to front right loudspeaker	♦ Check the resistance in the wire between pin 29 on plug A of the amplifier and pin 2 of the plug for the front right door loudspeaker	< 5 Ω ⇒ Step 5	Open circuit in the wire/short circuit to ground. Repair wiring harness → End
5	Replace front right loudspeaker		→ End	⇒ Step 6
6	Replace amplifier		→ End	

8013 External BOSE amplifier

Malfunction in rear left loudspeaker

Diagnostic conditions

- Ignition on
- PCM2/ CR 23 ON

Note!

♦

≥

♦

♦

Possible cause of fault

- ♦ Wiring harness/rear left and right loudspeakers faulty
- ♦ External BOSE amplifier output stage faulty

Affected pin

Amplifier control module, plug A, pins 23 and 28

Diagnosis/troubleshooting

Work instruction			Display OK	If not OK
1	Check the rear left and right wiring harness and loudspeakers	♦ Connect the Porsche System Tester II No. 9588 to the diagnostic socket; switch on the ignition and the Porsche System Tester II No. 9588 ♦ Select vehicle type 911 Turbo (996) and start the automatic control module search ♦ In the Control units menu, select 'PCM2' ♦ In the PCM2 menu, select 'External amplifier' ♦ Make a selection in the 'Fault memory' menu and start with the [>>] key ♦ Read out fault memory ♦ Erase fault memory ♦ Remove ignition key and switch on ignition again ♦ Read out fault memory ♦ Extract ambient data, press the [>>] key	→ End	Fault code is still displayed ⇒ Step 2
2	Check the rear left and right wiring harness and loudspeakers	♦ Switch off ignition ♦ Pull off plug A on the amplifier ♦ Check resistance on plug A, pins 23 and 28	= 5 Ω ⇒ Step 6	⇒ Step 3
3	Check the wiring harness to the rear left and right loudspeakers	♦ Pull off the plugs on the loudspeakers ♦ Check the resistance in the wire between pin 23 on plug A of the amplifier and pin 3 of the plug for the rear left and right loudspeaker	< 5 Ω Step 4	Open circuit in the wire/short circuit to ground. Repair wiring harness → End
4	Check the wiring harness to the rear left and right loudspeakers	♦ Check the resistance in the wire between pin 28 on plug A of the amplifier and pin 4 of the plug for the rear left and right loudspeakers	< 5 Ω ⇒ Step 5	Open circuit in the wire/short circuit to ground. Repair wiring harness → End
5	Replace the rear left and right loudspeakers		→ End	⇒ Step 6
6	Replace amplifier		→ End	

8014 External BOSE amplifier

Malfunction in rear right loudspeaker

Diagnostic conditions

- Ignition on
- PCM2/ CR 23 ON

Note!

♦

≥

♦

♦

Possible cause of fault

- ♦ Wiring harness/rear left and right loudspeakers faulty
- ♦ External BOSE amplifier output stage faulty

Affected pin

Amplifier control module, plug A, pins 23 and 28

Diagnosis/troubleshooting

Work instruction			Display OK	If not OK
1	Check the rear left and right wiring harness and loudspeakers	♦ Connect the Porsche System Tester II No. 9588 to the diagnostic socket; switch on the ignition and the Porsche System Tester II No. 9588 ♦ Select vehicle type 911 Turbo (996) and start the automatic control module search ♦ In the Control units menu, select 'PCM2' ♦ In the PCM2 menu, select 'External amplifier' ♦ Make a selection in the 'Fault memory' menu and start with the [>>] key ♦ Read out fault memory ♦ Erase fault memory ♦ Remove ignition key and switch on ignition again ♦ Read out fault memory ♦ Extract ambient data, press the [>>] key	→ End	Fault code is still displayed ⇒ Step 2
2	Check the rear left and right wiring harness and loudspeakers	♦ Switch off ignition ♦ Pull off plug A on the amplifier ♦ Check resistance on plug A, pins 23 and 28	= 5 Ω ⇒ Step 6	⇒ Step 3
3	Check the wiring harness to the rear left and right loudspeakers	♦ Pull off the plugs on the loudspeakers ♦ Check the resistance in the wire between pin 23 on plug A of the amplifier and pin 3 of the plug for the rear left and right loudspeaker	< 5 Ω Step 4	Open circuit in the wire/short circuit to ground. Repair wiring harness → End
4	Check the wiring harness to the rear left and right loudspeakers	♦ Check the resistance in the wire between pin 28 on plug A of the amplifier and pin 4 of the plug for the rear left and right loudspeakers	< 5 Ω ⇒ Step 5	Open circuit in the wire/short circuit to ground. Repair wiring harness → End
5	Replace the rear left and right loudspeakers		→ End	⇒ Step 6
6	Replace amplifier		→ End	

8015 External BOSE amplifier

Malfunction in loudspeaker for left door speaker

Diagnostic conditions

- Ignition on.
- PCM2/CDR23 ON

Note!

♦

≥

♦

♦

Possible cause of fault

- ♦ Wiring harness/left door loudspeaker faulty
- ♦ External BOSE amplifier output stage faulty

Affected pin

Amplifier control module, plug A, pins 25 and 38

Diagnosis/troubleshooting

Work instruction			Display OK	If not OK
1	Check wiring harness and left door loudspeaker	♦ Connect the Porsche System Tester II No. 9588 to the diagnostic socket; switch on the ignition and the Porsche System Tester II No. 9588 ♦ Select vehicle type 911 Turbo (996) and start the automatic control module search ♦ In the Control units menu, select 'PCM2' ♦ In the PCM2 menu, select 'External amplifier' ♦ Make a selection in the 'Fault memory' menu and start with the [>>] key ♦ Read out fault memory ♦ Erase fault memory ♦ Remove ignition key and switch on ignition again ♦ Read out fault memory ♦ Extract ambient data, press the [>>] key	→ End	Fault code is still displayed ⇒ Step 2
2	Check wiring harness and left door loudspeaker	♦ Switch off ignition ♦ Pull off plug A on the amplifier ♦ Check resistance on plug A, pins 25 and 38	= 5 Ω ⇒ Step 6	⇒ Step 3
3	Check wiring harness to left door loudspeaker	♦ Pull off the plugs on the loudspeakers ♦ Check the resistance in the wire between pin 38 on plug A of the amplifier and pin 2 of the plug for the front right door loudspeaker	< 5 Ω Step 4	Open circuit in the wire/short circuit to ground. Repair wiring harness → End
4	Check wiring harness to left door loudspeaker	♦ Check the resistance in the wire between pin 25 on plug A of the amplifier and pin 1 of the plug for the front right door loudspeaker	< 5 Ω ⇒ Step 5	Open circuit in the wire/short circuit to ground. Repair wiring harness → End
5	Replace left door speaker		→ End	⇒ Step 6
6	Replace amplifier		→ End	

8016 External BOSE amplifier

Malfunction in loudspeaker for right door speaker

Diagnostic conditions

- Ignition on.
- PCM2/ CR 23 ON.

Note!

♦

≥

♦

♦

Possible cause of fault

- Wiring harness/right door loudspeaker faulty
- External BOSE amplifier output stage faulty

Affected pin

Amplifier control module, plug A, pins 26 and 31

Diagnosis/troubleshooting

Work instruction			Display OK	If not OK
1	Check wiring harness and right door loudspeaker	♦ Connect the Porsche System Tester II No. 9588 to the diagnostic socket; switch on the ignition and the Porsche System Tester II No. 9588 ♦ Select vehicle type 911 Turbo (996) and start the automatic control module search ♦ In the Control units menu, select 'PCM2' ♦ In the PCM2 menu, select 'External amplifier' ♦ Make a selection in the 'Fault memory' menu and start with the [>>] key ♦ Read out fault memory ♦ Erase fault memory ♦ Remove ignition key and switch on ignition again ♦ Read out fault memory ♦ Extract ambient data, press the [>>] key	→ End	Fault code is still displayed ⇒ Step 2
2	Check wiring harness and right door loudspeaker	♦ Switch off ignition ♦ Pull off plug A on the amplifier ♦ Check resistance on plug A, pins 26 and 31	= 5 Ω ⇒ Step 6	⇒ Step 3
3	Check wiring harness to right door loudspeaker	♦ Pull off the plugs on the loudspeakers ♦ Check the resistance in the wire between pin 31 on plug A of the amplifier and pin 2 of the plug for the front right door loudspeaker	< 5 Ω Step 4	Open circuit in the wire/short circuit to ground. Repair wiring harness → End
4	Check wiring harness to right door loudspeaker	♦ Check the resistance in the wire between pin 26 on plug A of the amplifier and pin 1 of the plug for the front right door loudspeaker	< 5 Ω ⇒ Step 5	Open circuit in the wire/short circuit to ground. Repair wiring harness → End
5	Replace right door speaker		→ End	⇒ Step 6
6	Replace amplifier		→ End	

8017 External BOSE amplifier

Subwoofer faulty

Diagnostic conditions

- Ignition on
- PCM2/ CR 23 ON

Note!

♦

≥

♦

♦

Possible cause of fault

- Wiring harness/subwoofer faulty
- External BOSE amplifier output stage faulty

Affected pin

Amplifier control module, plug A, pins 16 and 4

Diagnosis/troubleshooting

Work instruction			Display OK	If not OK
1	Check wiring harness and woofer	♦ Connect the Porsche System Tester II No. 9588 to the diagnostic socket; switch on the ignition and the Porsche System Tester II No. 9588 ♦ Select vehicle type 911 Turbo (996) and start the automatic control module search ♦ In the Control units menu, select 'PCM2' ♦ In the PCM2 menu, select 'External amplifier' ♦ Make a selection in the 'Fault memory' menu and start with the [>>] key ♦ Read out fault memory ♦ Erase fault memory ♦ Remove ignition key and switch on ignition again ♦ Read out fault memory ♦ Extract ambient data, press the [>>] key	→ End	Fault code is still displayed ⇒ Step 2
2	Check wiring harness and woofer	♦ Switch off ignition ♦ Pull off plug A on the amplifier ♦ Check resistance on plug A, pins 16 and 4	= 5 Ω ⇒ Step 6	⇒ Step 3
3	Check wiring harness to woofer	♦ Pull off the plugs on the loudspeakers ♦ Check the resistance in the wire between pin 4 on plug A of the amplifier and pin 1 of the plug for the front right door loudspeaker	< 5 Ω Step 2	Open circuit in the wire/short circuit to ground. Repair wiring harness → End
4	Check wiring harness to woofer	♦ Check the resistance in the wire between pin 16 on plug A of the amplifier and pin 2 of the plug for the front right door loudspeaker	< 5 Ω ⇒ Step 5	Open circuit in the wire/short circuit to ground. Repair wiring harness → End
5	Replace subwoofer		→ End	⇒ Step 6
6	Replace amplifier		→ End	

8018 External BOSE amplifier

Malfunction in rear subwoofer

Diagnostic conditions

- Ignition on
- PCM2/ CR 23 ON

Note!

♦

≥

♦

♦

Possible cause of fault

- ♦ Wiring harness/subwoofer faulty
- ♦ External BOSE amplifier output stage faulty

Affected pin

Amplifier control module, plug A, pins 16 and 4

Diagnosis/troubleshooting

Work instruction			Display OK	If not OK
1	Check wiring harness and woofer	♦ Connect the Porsche System Tester II No. 9588 to the diagnostic socket; switch on the ignition and the Porsche System Tester II No. 9588 ♦ Select vehicle type 911 Turbo (996) and start the automatic control module search ♦ In the Control units menu, select 'PCM2' ♦ In the PCM2 menu, select 'External amplifier' ♦ Make a selection in the 'Fault memory' menu and start with the [>>] key ♦ Read out fault memory ♦ Erase fault memory ♦ Remove ignition key and switch on ignition again ♦ Read out fault memory ♦ Extract ambient data, press the [>>] key	→ End	Fault code is still displayed ⇒ Step 2
2	Check wiring harness and subwoofer	♦ Switch off ignition ♦ Pull off plug A on the amplifier ♦ Check resistance on plug A, pins 16 and 4	= 5 Ω ⇒ Step 6	⇒ Step 3
3	Check wiring harness to subwoofer	♦ Pull off the plugs on the loudspeakers ♦ Check the resistance in the wire between pin 4 on plug A of the amplifier and pin 1 of the plug for the front right door loudspeaker	< 5 Ω Step 2	Open circuit in the wire/short circuit to ground. Repair wiring harness → End
4	Check wiring harness to subwoofer	♦ Check the resistance in the wire between pin 16 on plug A of the amplifier and pin 2 of the plug for the front right door loudspeaker	< 5 Ω ⇒ Step 5	Open circuit in the wire/short circuit to ground. Repair wiring harness → End
5	Replace woofer		→ End	⇒ Step 6
6	Replace amplifier		→ End	

PCM2/CDR23 (Telephone/telematics)

Telephone/telematics - Introduction

The manual contains the diagnosis for the following system:

PCM2

General instructions/safety instructions

The following points must be observed during vehicle diagnosis:

- After the battery is connected, volatile memories must be reprogrammed. In the case of radio coding and tuning, the customer must be informed of decoding and the deleted tuner memory.
- After the battery has been connected, the instructions in the assembly ⇒ 9; Rep. Gr. - ; Work instructions after disconnecting the battery must be observed.
- Deactivate the 'automatic traffic announcement' before beginning the diagnosis on the PCM2. If this is not done, the system will crash.
- When working on the optical waveguide, observe the ⇒ 9; Rep. Gr. 9768; Optical waveguide - MOST bus assembly.
- After troubleshooting or repairs, erase the fault memory with the 9588 Porsche System Tester II and carry out a test drive.
- After the test drive, read out the fault memory with the 9588 Porsche System Tester II again.

Danger!

Danger of injury through triggering of driver's airbag

- ***9588 Never hang the Porsche System Tester II over the steering wheel.***

Caution!

Danger of damage due to improper handling of the battery and the control module connectors!

- ***Never disconnect battery with engine running.***

- ***Never start engine without securely connected battery.***
- ***Never pull off or push on plug connections for the control modules or other electronic components when the ignition is switched on.***

General information on the fault memory

Fault code setting conditions

Fault codes can be set in several circumstances, e.g.:

- battery disconnected.
- plug connections disconnected.
- power failure.

In these circumstances, no fault is present in the system and the fault memory must be erased.

Fault memory Info key F8

In order to be able to assess the fault exactly, the fault memory Info key F8 must be pressed. This information should be saved using the Save key F4 and printed out. If a fault code is stored with "not present" status and no other problems are present, then the fault memory must be erased.

Open circuit - short to ground / voltage short / version; vehicle parameters / counter	
Supply voltage - first occurrence	The value indicates the voltage at the time the fault occurred.
Hourmeter - first occurrence	The value indicates the operating hours at the time the fault first occurred.
Fault type	The following display types are available: • present. • not present.
Frequency counter	When a fault first occurs, a fault entry is made in the fault memory and the counter is simultaneously set to 50. If a fault is present, the counter is incremented by 1 for each "ignition on". The maximum count is 255. The counter is decremented if the fault is no longer present. The fault memory is automatically erased when the counter reaches 0. If the error occurs again when the counter is between 1 and 49, the counter is reset to 50.

Vehicle hand-over

The PCM2 is converted to delivery mode (low-current mode) in production. As known from other systems (alarm system, instrument

cluster, roll-over bar), the PCM2 must be activated with the 9588 Porsche System Tester II.

1. 9588 Connect and start the Porsche System Tester II and switch on the ignition.
2. Select the menu item 'Special functions' and press the [>>] key.
3. Select the menu item 'Vehicle hand-over' and press the [>>] key.
4. Follow the instructions of the 9588 Porsche System Tester II.

Display '*' in the menu 'Control modules' and menu 'PCM2 MOST component check'.

Different required and actual installed components lists

When the 'automatic control module search' is complete, the following display '*' appears in front of the control module description 'PCM2' in the 'Control modules' menu, as well as in the 'PCM2 MMI function selection' in front of the entry 'MOST required installed components list' if the 9588 Porsche System Tester II establishes a difference between the required and actual installed components list and there is no fault code in one of the fault memories of the MOST control modules.

If there is a fault code present in one of the MOST control modules, the display '*' is only shown in the 'PCM2 MMI function selection' in front of the line 'MOST required installed components list'.

If there is a display in the menu Control module, an existing fault code has priority and a '#' is set.

Control module replacement - PCM2

The PCM2 is provided in 'active production mode' in new vehicles and as a spare part. Each time the vehicle is started, the model range code that is stored is compared with the code in the instrument cluster. If no match is found, the device switches off after 30 seconds and the 'PROTECTED' message appears in the display. The device is not operational.

If a match is found, the device is operational. No further checks are made while the device is connected to the vehicle electrical system.

□□□□ □ □ □ □□□□□□ □ □□□□ □□□□ □ □□□

□□□□□□□□□□□□□□□□

□□□□□□□□ □ □□□□□□□□□

Component arrangement - telephone/telematics

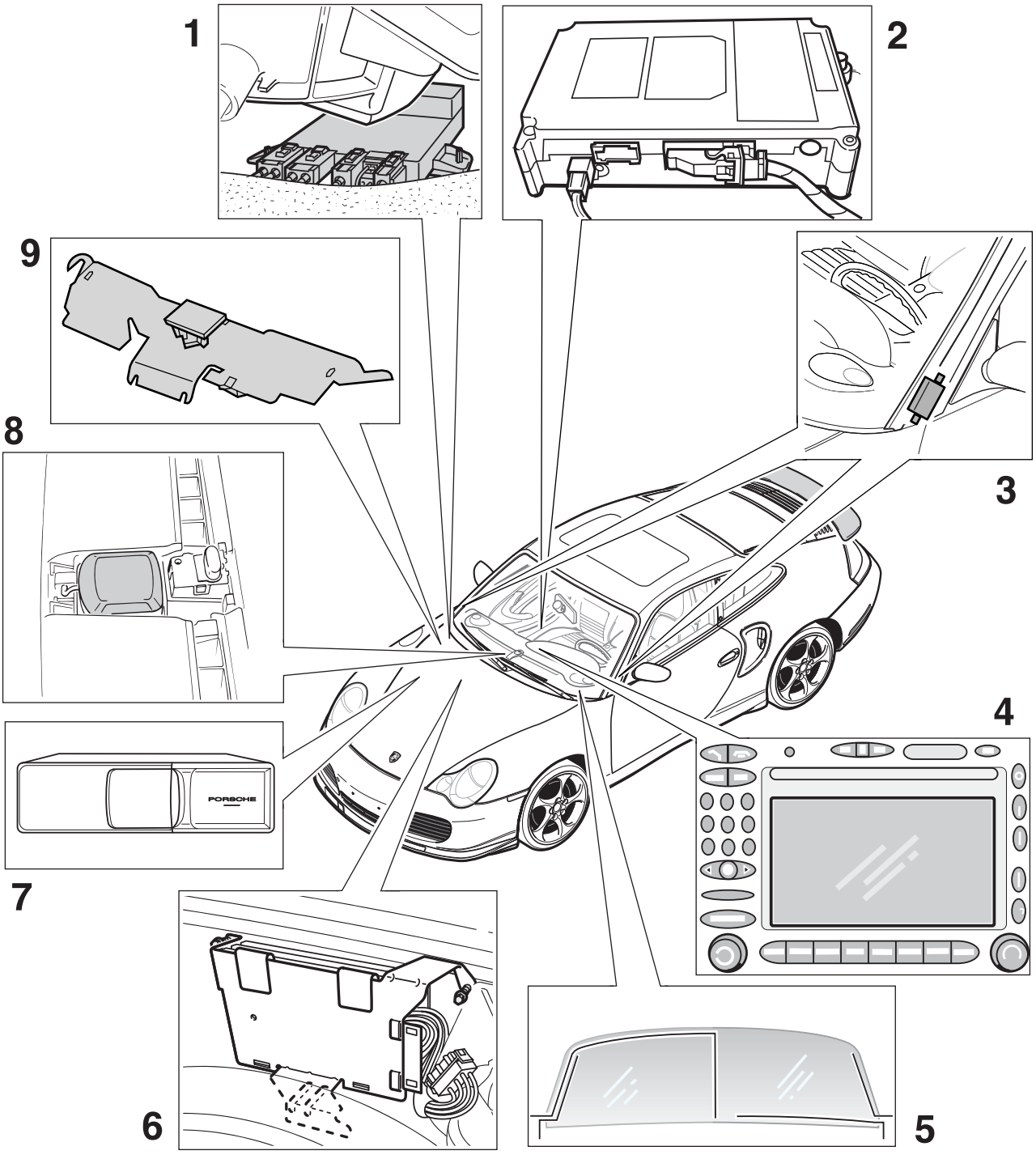

1 - Diversity antenna control unit.

2 - Telephone/telematics control unit

3 - Antenna amplifiers left and right.

4 - PCM2.

5 - Windscreen antenna

6 - External amplifier (option Harman/BOSE).

7 - CD changer

8 - GPS antenna

9 - GSM antenna

Telephone/telematics connector assignment

Connector assignment

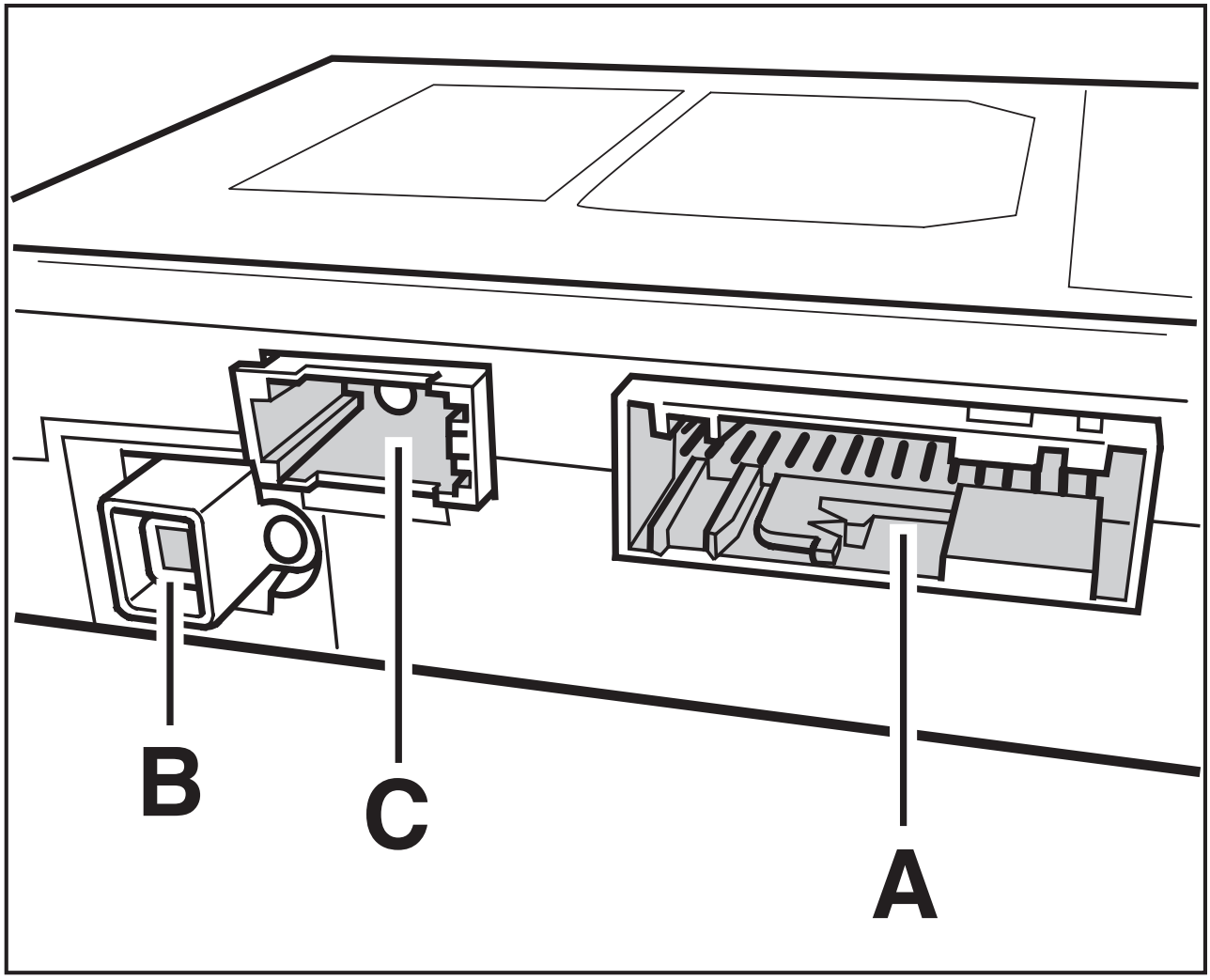

Connector A

Pin	Designation	Pin	Designation
A 1	Not used	A 17	Not used
A 2	Not used	A 18	Not used
A 3	Handset ON/OFF	A 19	Not used
A 4	Not used	A 20	DSC downlink
A 5	Not used	A 21	Not used
A 6	Not used	A 22	DSC uplink
A 7	Not used	A 23	Wake-up
A 8	Handset +	A 24	Handset ground

Connector A

Pin	Designation	Pin	Designation
A 9	Ground	A 25	Ground
A 10	Not used	A 26	Logic ground
A 11	Not used	A 27	Not used
A 12	Supply +	A 28	Not used
A 13	Supply +	A 29	Not used
A 14	Terminal 86 S	A 30	Not used
A 15	Emergency call +	A 31	Not used
A 16	Emergency call -	A 32	Not used

Connector B

Pin	Designation	Pin	Designation
B1	Telephone antenna	B 2	

Connector C

Pin	Designation	Pin	Designation
C 1	Optical waveguide	C 2	Optical waveguide

Telephone/telematics control module function

Terminating resistors on the CAN

Terminating resistors are fitted to each end of the wiring to prevent reflection on the wiring. These terminating resistors are integrated into each control module. The interconnection prevents the resistors from being measured with the ohmmeter from the outside.

CAN comfort

Communication between the Porsche System Tester II No. 9588 and the MOST control modules only takes place via the K lead to the instrument cluster. The data is transferred from the instrument cluster gateway to the MOST control modules, via CAN Comfort to the PCM2 gateway, via the electrical MOST in the PCM2 and via the optical MOST outside of the PCM2.

CD changer (CDC)

The CDC is availabe as an optional feature and is linked to the PCM2 via the optical waveguide.

Coding table

Coding type	PCM2 GW	PCM2 MMI	CDR23	Navigation	Harman amplifier	BOSE amplifier	CD changer	Telephone
ABS pulse number				X				
Call automatically accepted		X						
Display format		X		X				
External handset								X
Date		X		X				
Units	X	X		X				
Vehicle type vehicle coding	X	X	X	X	X	X		
Vehicle version vehicle coding	X	X	X	X	X	X		
Right/left-hand drive vehicle coding	X	X	X	X	X	X		
Wheel size				X				
GAL (NLB)		X	X					

Coding type	PCM2 GW	PCM2 MMI	CDR23	Navigation	Harman amplifier	BOSE amplifier	CD changer	Telephone
Height/width in per cent				X				
Air conditioning	X	X		X				
Country coding	X	X		X				
Main set-up menu		X						
MOST switch	x							
MOST required installed components list		X	X					
PCM2 code	X	X	X	X				
Porsche Assistance, international designation		X						
Porsche Assistance, international number		X						
Porsche Assistance menu		X						
Porsche Assistance, national designation		X						
Porsche Assistance, national number		X						
Production mode	X	X	X					
Tyre width				X				
Tyre condition				X				
Summer/winter time		X		X				
Time-out		X						
Tuner parameters	X		X					
User data			X					
Traffic broadcast loudspeaker boost		X	X					
Time		X		X				
Time zone		X		X				

Coding

It is possible to extract the chassis number and to code the PCM2 on a country-specific basis in the 'Modify coding' menu.

Menu item	Function
♦ PCM2 code	Under this menu item, the PCM2 code can be coded after replacing the PCM2. ♦ Connect and start the Porsche System Tester II No. 9588 and switch on the ignition ♦ Select '911 Turbo (996)' in the Vehicle type menu and confirm with the [→|] key ♦ Select 'PCM' in the control modules selection and confirm with the [>>] key ♦ Select 'PCM2 GW' in the PCM2 function selection and confirm with the [>>] key ♦ Select menu item Coding ♦ Select menu item "PCM2 code" ♦ Take the PCM2 code from 'IPAS', enter it and code it with the [F8] key
♦ Country coding	Using this menu item, you can code the country code ♦ Connect and start the Porsche System Tester II No. 9588 and switch on the ignition ♦ Select '911 Turbo (996)' in the Vehicle type menu and confirm with the [→|] key ♦ Select 'PCM' in the control modules selection and confirm with the [>>] key ♦ Select 'PCM2 GW' in the 911 Turbo (996) PCM2 function selection and confirm with the [>>] key ♦ Select the coding menu item and confirm with the [>>] key ♦ Select the menu item "Country coding" and confirm with the [>>] key ♦ Select "the relevant country coding" from the menu item that is displayed and code it with the [F8] key

Data transfer fault

If faults are detected when the data is decoded, this is known as a data transfer fault. The faults can arise when the data is encoded, when the data is transferred through an input level that is optically too low or when the data is decoded. A fault entry is not recorded.

Installation position of the control module

The telephone control module is installed under the passenger's seat.

Function of the components

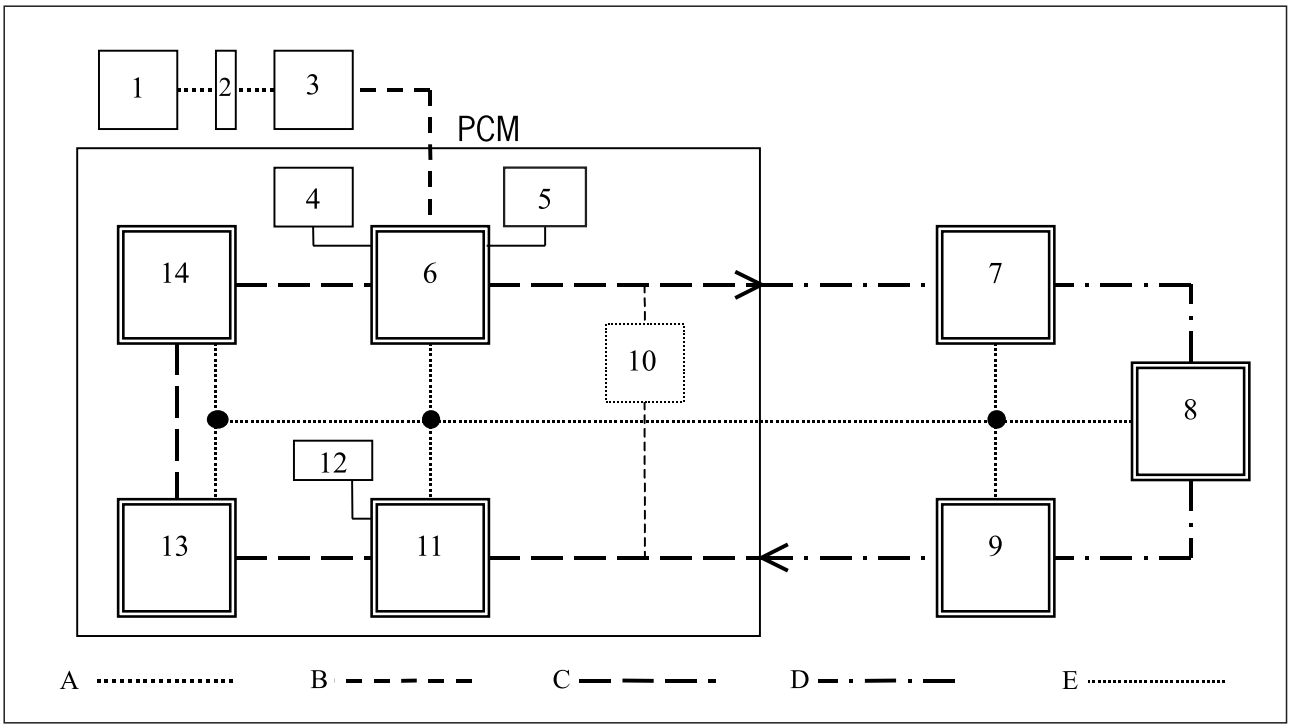

A - K lead
B - CAN comfort
C - Electrical MOST (internal)
D - Optical MOST (external)
E - MOST diagnosis lead
1 - Porsche System Tester II No. 9588
2 - Diagnostic box
3 - Instrument cluster (gateway)
4 - PCM2 (internal amplifier)
5 - PCM2 (tuner)
6 - PCM2 (gateway) (MOST nodes)
7 - External amplifier (MOST nodes)
8 - CDC (CD changer) (MOST nodes)
9 - Telephone/telematics (MOST nodes)
10 - PCM2 (MOST switch)
11 - MMI (Man Machine Interface) (MOST nodes)
12 - PCM2 single CD
13 - Navigation (MOST nodes)
14 - VOCS (voice control system) (MOST nodes)

Gateway

The gateway is integrated in the PCM2. Together with the MMI, it is a fixed component of each PCM2. It provides a connection to CAN Comfort via its nodes. Diagnostic and useful data is exchanged with the CAN via these nodes.

It creates links to the following systems:

- CAN Comfort
- Media Oriented Systems Transport (MOST), internal (electrical)
- Voice control system (VOCS) (optional/insertion)
- Navigation (optional/insertion)
- Man Machine Interface (MMI)
- Single CD
- Media Oriented Systems Transport (MOST), external bus (optical)
- Amplifier optional (Harman or BOSE)
- CD changer
- Telephone/telematics

Identification

The diagnosis software number and the part numbers for the PCM2 can be read out under this menu item.

1. Connect and start the Porsche System Tester II No. 9588 and switch on the ignition
2. Select '911 Turbo (996)' in the Vehicle type menu and confirm with the [→|] key
3. Select 'PCM' in the control modules selection and confirm with the [>>] key
4. Select 'PCM2 GW' in the PCM2 function selection and confirm with the [>>] key
5. Select the "Identification" menu item and press the [>>] key
6. "Diagnosis software number; PCM2 parts number" appears on the display

Note!

Actual values

It is possible to read out the unlock counter under the 'Actual values' menu item.

Menu item	Function
♦ Unlock counter	Under this menu item, it is possible to check the electrical and optical MOST during troubleshooting. ♦ Connect and start the Porsche System Tester II No. 9588 and switch on the ignition ♦ Select '911 Turbo (996)' in the Vehicle type menu and confirm with the [→|] key ♦ Select 'PCM' in the control modules selection and confirm with the [>>] key ♦ Select 'PCM2 GW' in the PCM2 function selection and confirm with the [>>] key ♦ Select 'Actual values' in the menu item and confirm with the [>>] key ♦ Select the "Unlock counter" menu item using the [>] key and confirm with the [>>] key ♦ Read out values from the display field

Lock/unlock

There is a lock present when the MOST signal sent by the MMI (electronically or optically via the optical waveguide) can be recognised by the connected MOST control units.

Man Machine Interface (MMI)

The MMI is part of the PCM2 (on the mainboard). It carries out the diagnostics of the ring break diagnosis line (stub cable) and the diagnostics of the optical distribution line.

MOST actual and required installed components lists

All MOST control modules that are connected to the PCM2 are entered via diagnostic tester in the 'required installed components list'. Only the MOST control units recorded in the MOST required installed components list are activated. An 'actual installed components list' of the detected devices is written and saved when the PCM2 is started.

MOST - optical/electrical

MOST signals are transferred electrically within the PCM2 and optically outside of the PCM2. Internally, the PCM2 consists of at least

2 nodes (GW and MMI), which are installed in the device and can also be expanded to four nodes by adding the navigation and VOCS nodes.

The data is transferred outside of the PCM2 via the optical waveguide, which creates a connection to the nodes in the external MOST control modules such as external amplifiers and/or telephone/telematics (depending on the equipment). The gateway node represents the connection to CAN Comfort.

MOST switch

The MOST - switch - switch is part of the PCM2. It keeps the electrical MOST closed if no other MOST control module is optically connected to the MOST. The MOST switch is opened when a light signal is received from the connected MOST control modules.

The following settings can be coded:

- MOST switch open.
- MOST switch closed.

Note!

-

-

Navigation

The navigation module is designed as a module box, which can be inserted in the PCM2 as an option. After the insertion, an electronic switch is opened automatically and the module is integrated into the MOST ring.

Ring break diagnosis line

The diagnosis distribution line is an electrical lead, which, as a stub cable, connects the individual MOST control modules in the system with one another. The existing MOST control modules are checked at regular intervals during communication with the control modules via the electrical/optical MOST.

Input signals

The following queries can be run using this menu item:

- Tuner parameters
- Registry startup status
- Internal ring startup status
- External ring startup status

Note!

Menu item	Function
♦ Tuner parameters	Under this menu item, it is possible to check the electrical and optical MOST during troubleshooting. ♦ Connect and start the Porsche System Tester II No. 9588 and switch on the ignition ♦ Select '911 Turbo (996)' in the Vehicle type menu and confirm with the [→|] key ♦ Select 'PCM' in the Control units menu and confirm with the [>>] key ♦ Select 'PCM2-GW' in the PCM2 function selection menu and confirm with the [>>] key ♦ Select the Input signals menu item and confirm with the [>>] key ♦ Select the "Tuner parameters" menu item using the [>] key and press the [>>] key ♦ Read out values from the display field ♦ 'Registry startup status' required installed components list exists ♦ 'Internal ring startup status' internal MOST (electrical) is functional ♦ 'External ring startup status' external MOST (optical) is functional

Voice control system (VOCS)

The VOCS is designed as a module box which can be pushed into the PCM2 (optional). After the insertion, an electronic switch is opened and the module is integrated into the MOST ring.

PCM2 control module (head unit)

The PCM2 control module (head unit) includes the following components:

Internal:

PCM2 gateway

PCM2 Man Machine Interface (MMI)

Internal amplifier (optional, depending on the equipment)

Tuner

Single CD

Navigation (optional/insertion)

VOCS (voice control system) (optional/insertion)

Controller Area Network (CAN) Comfort

MOST switch

External:

External amplifier (optional, Harman or BOSE)

Telephone/telematics (optional)

CD changer (CDC), (optional)

The PCM2 consists of at least two but a maximum of four MOST nodes, (Gateway, MMI and Navigation and VOCS (optional)), which communicate with each other via the electronic MOST. Data is transferred outside of the PCM2 via the optical MOST.

Drive links

Drive links of the PCM2 can be activated with this menu item. This allows the function of the drive links to be assessed very quickly.

The following drive links can be activated with the Porsche System Tester II No. 9588:

- MOST bus switch on
- MOST bus switch off
- MOST power reduction - start
- MOST power reduction - stop
- Output switch on
- Output switch off
- Volume - minimum value
- Volume - centre position
- Volume - maximum value
- Front fader
- Middle fader
- Rear fader
- Left balance
- Central balance

- Right balance
- Bass - minimum value
- Bass - centre position
- Bass - maximum value
- Treble - minimum value
- Treble - centre position
- Treble - maximum value
- Open MOST switch
- MOST switch closed
- Mute off
- Mute on

The subsequent note does not apply to the following:

- MOST bus switch
- MOST power reduction

Note!

Telephone/telematics

The telephone/telematics feature is availabe as an option and is linked to the PCM2 via the optical waveguide.

Tuner

The tuner is part of the PCM2 and is installed on the main board.

Unlock counter

Interruptions occur in the system if perfect communication is no longer possible. If the relevant threshhold values are exceeded, an entry is recorded in the appropriate control module and the 'unlock counter' is incremented.

External amplifier

The external amplifier (Harman or BOSE) is availabe as an optional feature and is linked to the PCM2 via the optical waveguide.

Internal amplifier

The optional internal amplifer (depending on equipment) is part of the PCM2 (installed on the main board).

Wake-up function

In an idle state, all control modules that are connected to the MOST are in sleep mode. When the PCM2 is switched on, a light is switched on via the MMI. It is reinforced and passed on by the MOST control modules that are connected.

Telephone/telematics fault overview

Fault code	Fault text	Fault effect
9603	Handset error	Can only be operated under certain conditions
9604	GSM antenna fault	Can only be operated under certain conditions
9605	RAM navigation fault	Can only be operated under certain conditions
9606	No communication MOST interruption	Failure

9603 Telephone/telematics

Handset error

Diagnostic conditions

- Ignition on
- PCM2 on

Note!

♦

♦

э≥

♦

Possible cause of fault

♦ No entry in the configuration file

Note!

♦

♦

♦

♦

♦

Affected terminals

-

Diagnosis/troubleshooting

Work instruction			Display OK	If not OK
1	Read out telephone fault memory	♦ Connect and start the Porsche System Tester II No. 9588 and switch on the ignition ♦ Select vehicle type 911 (996) and start the automatic control module search ♦ In the Control units menu, select 'PCM2' ♦ Using the selection button, click 'Telephone' in the 'Function selection' menu and start it with the [>>] key ♦ Using the selection button, click 'Fault memory' in the 'Telephone function selection' menu and start it with the [>>] key ♦ Read out fault memory ♦ Erase fault memory ♦ Remove ignition key and switch on ignition again ♦ Read out fault memory	→ End	Fault code is displayed ⇒ Step 2
2	Check wiring harness to the additional receiver	♦ Switch off ignition ♦ Pull off plug A on the telephone control module ♦ Pull off plug A on the additional telephone receiver ♦ Measure resistance between plug A on the telephone control module, pin 24 and pin 1 on the plug on the additional telephone receiver	< 0.5 Ω ⇒ Step 3	Repair wiring harness → End
3	Check wiring harness to the additional receiver	♦ Measure resistance between plug A on the telephone control module, pin 25, and pin 2 on the plug on the additional telephone receiver	< 0.5 Ω ⇒ Step 4	Repair wiring harness → End
4	Check wiring harness to the additional receiver	♦ Measure resistance between plug A on the telephone control module, pin 8, and pin 3 on the plug on the additional telephone receiver	< 0.5 Ω ⇒ Step 5	Repair wiring harness. → End
5	Check wiring harness to the additional receiver	♦ Measure resistance between plug A on the telephone control module, pin 20, and pin 4 on the plug on the additional telephone receiver	< 0.5 Ω ⇒ Step 6	Repair wiring harness. → End
6	Check wiring harness to the additional receiver	♦ Measure resistance between plug A on the telephone control module, pin 22 and pin 5 on the plug on the additional telephone receiver	< 0.5 Ω ⇒ Step 7	Repair wiring harness. → End

Work instruction			Display OK	If not OK
7	Check wiring harness to the additional receiver	♦ Measure resistance between plug A on the telephone control module, pin 26, and pin 6 on the plug on the additional telephone receiver	< 0.5 Ω ⇒ Step 8	Repair wiring harness. → End
8	Check wiring harness to the additional receiver	♦ Measure resistance between plug A on the telephone control module, pin 24, and ground	∞ Ω ⇒ Step 9	Repair short circuit to ground in the wiring harness → End
9	Check wiring harness to the additional receiver	♦ Measure resistance between plug A on the telephone control module, pin 25, and ground	∞ Ω ⇒ Step 10	Repair short circuit to ground in the wiring harness → End
10	Check wiring harness to the additional receiver	♦ Measure resistance between plug A, pin 8, on the telephone control module and ground	v ⇒ Step 11	Repair short circuit to ground in the wiring harness → End
11	Check wiring harness to the additional receiver	♦ Measure resistance between plug A, pin 20, on the telephone control module and ground	∞ Ω ⇒ Step 12	Repair short circuit to ground in the wiring harness → End
12	Check wiring harness to the additional receiver	♦ Measure resistance between plug A, pin 22, on the telephone control module and ground	∞ Ω ⇒ Step 13	Repair short circuit to ground in the wiring harness → End
13	Check wiring harness to the additional receiver	♦ Measure resistance between plug A, pin 26, on the telephone control module and ground	∞ Ω ⇒ Step 14	Repair short circuit to ground in the wiring harness → End
14	Check wiring harness to the additional receiver	♦ Measure resistance between plug A, pin 3, on the telephone control module and ground	∞ Ω ⇒ Step 15	Repair short circuit to ground in the wiring harness → End
15	Check wiring harness to the additional receiver	♦ Measure voltage between plug A, pin 24, on the telephone control module and ground ♦ Switch ignition on	0 V ⇒ Step 16	Repair short circuit to B+ in the wiring harness → End
16	Check wiring harness to the additional receiver	♦ Measure voltage between plug A, pin 25, on the telephone control module and ground ♦ Switch ignition on	0 V ⇒ Step 17	Repair short circuit to B+ in the wiring harness → End
17	Check wiring harness to the additional receiver	♦ Measure voltage between plug A, pin 8, on the telephone control module and ground ♦ Switch ignition on	0 V ⇒ Step 18	Repair short circuit to B+ in the wiring harness → End

Work instruction			Display OK	If not OK
18	Check wiring harness to the additional receiver	♦ Measure voltage between plug A, pin 20, on the telephone control module and ground ♦ Switch ignition on	0 V ⇒ Step 19	Repair short circuit to B+ in the wiring harness → End
19	Check wiring harness to the additional receiver	♦ Measure voltage between plug A, pin 22, on the telephone control module and ground ♦ Switch ignition on	0 V ⇒ Step 20	Repair short circuit to B+ in the wiring harness → End
20	Check wiring harness to the additional receiver	♦ Measure voltage between plug A, pin 26, on the telephone control module and ground ♦ Switch ignition on	0 V ⇒ Step 21	Repair short circuit to B+ in the wiring harness → End
21	Check wiring harness to the additional receiver	♦ Measure voltage between plug A, pin 3, on the telephone control module and ground ♦ Switch ignition on	0 V ⇒ Step 22	Repair short circuit to B+ in the wiring harness → End
22	Check wiring harness to the additional receiver	♦ Measure resistance between plug A, pin 24, on the telephone control module and pins 25, 8, 20, 22, 26 and 3	∞ Ω ⇒ Step 23	Repair short circuit between wires in the wiring harness → End
23	Check wiring harness to the additional receiver	♦ Measure resistance between plug A, pin 25, on the telephone control module and pins 8, 20, 22, 26 and 3	∞ Ω ⇒ Step 24	Repair short circuit between wires in the wiring harness → End
24	Check wiring harness to the additional receiver	♦ Measure resistance between plug A, pin 8, on the telephone control module and pins 20, 22, 26 and 3	∞ Ω ⇒ Step 25	Repair short circuit between wires in the wiring harness → End
25	Check wiring harness to the additional receiver	♦ Measure resistance between plug A, pin 20, on the telephone control module and pins 22, 26 and 3	∞ Ω ⇒ Step 26	Repair short circuit between wires in the wiring harness → End
26	Check wiring harness to the additional receiver	♦ Measure resistance between plug A, pin 22, on the telephone control module and pins 26 and 3	∞ Ω ⇒ Step 27	Repair short circuit between wires in the wiring harness → End
27	Check wiring harness to the additional receiver	♦ Measure resistance between plug A, pin 26, on the telephone control module and pin 3	∞ Ω ⇒ Step 28	Repair short circuit between wires in the wiring harness → End
28	♦ Replace handset		→ End	⇒ Step 29
6	♦ Replace telephone control module		→ End	

9604 Telephone/telematics

GSM antenna fault

Diagnostic conditions

- Ignition on.
- PCM2 on.

Possible cause of fault

- Antenna lead faulty.
- GSM antenna faulty.

Note!

-
-
-
-
-

Affected pin

Telephone control module, plug B, pin 1.

Diagnosis/troubleshooting

Work instruction			Display OK	If not OK
1	Read out telephone fault memory	♦ Connect and start the Porsche System Tester II No. 9588 and switch on the ignition ♦ Select vehicle type 911 (996) and start the automatic control module search ♦ In the Control units menu, select 'PCM2' ♦ Using the selection button, click 'Telephone' in the 'Function selection' menu and start it with the [>>] key ♦ Using the selection button, click 'Fault memory' in the 'Telephone function selection' menu and start it with the [>>] key ♦ Read out fault memory ♦ Erase fault memory ♦ Remove ignition key and switch on ignition again ♦ Read out fault memory	→ End	Fault code is displayed ⇒ Step 2
2	Check supply lead to the GMS antenna	♦ Using the selection button, select 'PCM2 GW' in the '911 (996) PCM2 function selection' menu and start it with the [>>] key ♦ Using the selection button, select 'Special function' in the '911 (996) PCM2 function selection' menu and start it with the [>>] key ♦ Using the selection button, select 'Antenna diversity test' in the '911 (996) PCM2 GW special functions' menu and start it with the [>>] key ♦ Read out fault memory ♦ Erase fault memory ♦ Remove ignition key and switch on ignition again ♦ Read out fault memory	< 0.5 Ω ⇒ Step 3	Repair wiring harness. → End
3	Check wiring harness to the additional receiver	♦ Measure resistance between plug A on the telephone control module, pin 25, and pin 2 on the plug on the additional telephone receiver	< 0.5 Ω ⇒ Step 4	Repair wiring harness → End
4	Check wiring harness to the additional receiver	♦ Measure resistance between plug A on the telephone control module, pin 8, and pin 3 on the plug on the additional telephone receiver	< 0.5 Ω ⇒ Step 5	Repair wiring harness → End

Work instruction			Display OK	If not OK
5	Check wiring harness to the additional receiver	♦ Measure resistance between plug A on the telephone control module, pin 20, and pin 4 on the plug on the additional telephone receiver	< 0.5 Ω ⇒ Step 6	Repair wiring harness → End
6	Check wiring harness to the additional receiver	♦ Measure resistance between plug A on the telephone control module, pin 22 and pin 5 on the plug on the additional telephone receiver	< 0.5 Ω ⇒ Step 7	Repair wiring harness → End
7	Check wiring harness to the additional receiver	♦ Measure resistance between plug A on the telephone control module, pin 26, and pin 6 on the plug on the additional telephone receiver	< 0.5 Ω ⇒ Step 8	Repair wiring harness → End
8	Check wiring harness to the additional receiver	♦ Measure resistance between plug A on the telephone control module, pin 24, and ground	∞ Ω ⇒ Step 9	Repair short circuit to ground in the wiring harness → End
9	Check wiring harness to the additional receiver	♦ Measure resistance between plug A on the telephone control module, pin 25, and ground	∞ Ω ⇒ Step 10	Repair short circuit to ground in the wiring harness → End
10	Check wiring harness to the additional receiver	♦ Measure resistance between plug A, pin 8, on the telephone control module and ground	v ⇒ Step 11	Repair short circuit to ground in the wiring harness → End
11	Check wiring harness to the additional receiver	♦ Measure resistance between plug A, pin 20, on the telephone control module and ground	∞ Ω ⇒ Step 12	Repair short circuit to ground in the wiring harness → End
12	Check wiring harness to the additional receiver	♦ Measure resistance between plug A, pin 22, on the telephone control module and ground	∞ Ω ⇒ Step 13	Repair short circuit to ground in the wiring harness → End
13	Check wiring harness to the additional receiver	♦ Measure resistance between plug A, pin 26, on the telephone control module and ground	∞ Ω ⇒ Step 14	Repair short circuit to ground in the wiring harness → End
14	Check wiring harness to the additional receiver	♦ Measure resistance between plug A, pin 3, on the telephone control module and ground	∞ Ω ⇒ Step 15	Repair short circuit to ground in the wiring harness → End
15	Check wiring harness to the additional receiver	♦ Measure voltage between plug A, pin 24, on the telephone control module and ground ♦ Switch ignition on	0 V ⇒ Step 16	Repair short circuit to B+ in the wiring harness → End

Work instruction			Display OK	If not OK
16	Check wiring harness to the additional receiver	♦ Measure voltage between plug A, pin 25, on the telephone control module and ground ♦ Switch ignition on	0 V ⇒ Step 17	Repair short circuit to B+ in the wiring harness → End
17	Check wiring harness to the additional receiver	♦ Measure voltage between plug A, pin 8, on the telephone control module and ground ♦ Switch ignition on	0 V ⇒ Step 18	Repair short circuit to B+ in the wiring harness → End
18	Check wiring harness to the additional receiver	♦ Measure voltage between plug A, pin 20, on the telephone control module and ground ♦ Switch ignition on	0 V ⇒ Step 19	Repair short circuit to B+ in the wiring harness → End
19	Check wiring harness to the additional receiver	♦ Measure voltage between plug A, pin 22, on the telephone control module and ground ♦ Switch ignition on	0 V ⇒ Step 20	Repair short circuit to B+ in the wiring harness → End
20	Check wiring harness to the additional receiver	♦ Measure voltage between plug A, pin 26, on the telephone control module and ground ♦ Switch ignition on	0 V ⇒ Step 21	Repair short circuit to B+ in the wiring harness → End
21	Check wiring harness to the additional receiver	♦ Measure voltage between plug A, pin 3, on the telephone control module and ground ♦ Switch ignition on	0 V ⇒ Step 22	Repair short circuit to B+ in the wiring harness → End
22	Check wiring harness to the additional receiver	♦ Measure resistance between plug A, pin 24, on the telephone control module and pins 25, 8, 20, 22, 26 and 3	∞ Ω ⇒ Step 23	Repair short circuit between wires in the wiring harness → End
23	Check wiring harness to the additional receiver	♦ Measure resistance between plug A, pin 25, on the telephone control module and pins 8, 20, 22, 26 and 3	∞ Ω ⇒ Step 24	Repair short circuit between wires in the wiring harness → End
24	Check wiring harness to the additional receiver	♦ Measure resistance between plug A, pin 8, on the telephone control module and pins 20, 22, 26 and 3	∞ Ω ⇒ Step 25	Repair short circuit between wires in the wiring harness. → End
25	Check wiring harness to the additional receiver	♦ Measure resistance between plug A, pin 20, on the telephone control module and pins 22, 26 and 3	∞ Ω ⇒ Step 26	Repair short circuit between wires in the wiring harness → End
26	Check wiring harness to the additional receiver	♦ Measure resistance between plug A, pin 22, on the telephone control module and pins 26 and 3	∞ Ω ⇒ Step 27	Repair short circuit between wires in the wiring harness → End

Work instruction			Display OK	If not OK
27	Check wiring harness to the additional receiver	♦ Measure resistance between plug A, pin 26, on the telephone control module and pin 3	∞ Ω ⇒ Step 28	Repair short circuit between wires in the wiring harness → End
28	♦ Replace handset		→ End	⇒ Step 29
6	♦ Replace telephone control module		→ End	

9605 Telephone/telematics

RAM navigation fault

Diagnostic conditions

- Ignition on.
- PCM2 on.

Possible cause of fault

- Telephone control module faulty

Note!

-
-
-
-
-

Affected pin

-

Diagnosis/troubleshooting

Work instruction			Display OK	If not OK
1	Read out telephone fault memory	♦ Connect and start the Porsche System Tester II No. 9588 and switch on the ignition ♦ Select vehicle type 911 (996) and start the automatic control module search ♦ In the Control units menu, select 'PCM2' ♦ Using the selection button, click 'Telephone' in the 'Function selection' menu and start it with the [>>] key ♦ Using the selection button, click 'Fault memory' in the 'Telephone function selection' menu and start it with the [>>] key ♦ Read out fault memory ♦ Erase fault memory ♦ Remove ignition key and switch on ignition again ♦ Read out fault memory	→ End	Fault code is displayed ⇒ Step 2
2	Replace telephone control module		→ End	

9606 Telephone/telematics

No MOST communication

Diagnostic conditions

- Ignition on
- PCM2 on

Possible cause of fault

- Short circuit between the two CAN comfort leads (CAN-high and CAN-low)
- Short circuit between CAN comfort (high) (drive) and ground
- Short circuit between CAN comfort (low) (drive) and voltage
- A faulty control module connected to CAN drive

Note!

Note!

Affected pin

Instrument cluster connector A, pin 15 and pin 31

Diagnosis/troubleshooting

Work instruction			Display OK	If not OK
1	Check CAN comfort leads, CAN comfort (high) and CAN comfort (low) for short circuit	♦ Switch off ignition ♦ Remove plug A from the instrument cluster ♦ Pull plug off the Tiptronic control unit ♦ Pull plug off the PSM control unit ♦ Pull off steering angle sensor plug ♦ Pull plug off the DME control unit ♦ Measure resistance on plug A of the instrument cluster between pin 15 and pin 31 ♦ Measure resistance between pin 3 and pin 4 on plug B of the DME control unit	∞ Ω ⇒ Step 2	Repair wiring harness → End
2	Check CAN comfort lead, CAN-high for short to ground	♦ Measure resistance between plug A on instrument cluster pin 15 and ground ♦ Measure resistance between pin 3 and ground on the plug B of the DME control unit	∞ Ω ⇒ Step 3	Repair wiring harness → End
3	Check CAN comfort lead, CAN-low for short circuit to B+	♦ Switch on ignition ♦ Measure resistance between plug A on instrument cluster pin 31 and ground ♦ Measure voltage between pin 3 and ground on the plug B on the DME control unit	0 V ⇒ Step 4	Repair wiring harness → End
4	Determine faulty control unit	♦ Switch off ignition ♦ Reconnect all plugs to control units ♦ Pull off plugs to the control units (except instrument cluster) individually and read out the fault memory of the instrument cluster and check whether the fault has been remedied	The fault is remedied by disconnecting the plug connection of a control unit ⇒ Step 5	The fault is still present ⇒ Step 6
5	♦ Replace the control module that was last disconnected from CAN comfort		→ End	
6	♦ Replace instrument cluster		→ End	

PCM2/CDR23 (Navigation)

Navigation - introduction

The manual contains the diagnosis for the following system:

PCM2 navigation

General instructions/safety instructions

The following points must be observed during vehicle diagnosis:

- After the battery is connected, volatile memories must be reprogrammed. In the case of radio coding and tuning, the customer must be informed of decoding and the deleted tuner memory.
- After the battery has been connected, the instructions in the assembly ⇒ 9; Rep. Gr. - ; Work instructions after disconnecting the battery must be observed.
- Deactivate the 'automatic traffic announcement' before beginning the diagnosis on the PCM2. If this is not done, the system will crash (applies only to software version < 03).
- When working on the optical waveguide, please observe the instructions in assembly ⇒ 9; Rep. Gr. 9768; Optical waveguide - MOST bus.
- After troubleshooting or repairs, erase the fault memory with the 9588 Porsche System Tester II and carry out a test drive.
- After the test drive, read out the fault memory with the 9588 Porsche System Tester II again.

Danger!

Danger of injury through triggering of driver's airbag

- ***9588 Never hang the Porsche System Tester II over the steering wheel.***

Caution!

Danger of damage due to improper handling of the battery and the control module connectors!

- ***Never disconnect battery with engine running.***

- ***Never start engine without securely connected battery.***
- ***Never pull off or push on plug connections for the control modules or other electronic components when the ignition is switched on.***

General information on the fault memory

Fault code setting conditions

Fault codes can be set in several circumstances, e.g.:

- battery disconnected
- plug connections disconnected
- power failure

In these circumstances, no fault is present in the system and the fault memory must be erased.

Fault memory Info key F8

In order to be able to assess the fault exactly, the fault memory Info key F8 must be pressed. This information should be saved using the Save key F4 and printed out. If a fault code is stored with "not present" status and no other problems are present, then the fault memory must be erased.

Fault type - Frequency counter/Temperature/Voltage; Speed/Time of occurrence.

Fault type	The display shows which fault type has occurred: - No GPS info - Gyroscope faulty
Frequency counter:	When a fault first occurs, a fault entry is made in the fault memory and the counter is simultaneously set to 50. If a fault is present, the counter is incremented by 1 for each "ignition on". The maximum count is 100. The counter is decremented if the fault is no longer present. The fault memory is erased automatically when the counter reaches 0.
First occurrence (month, day):	The date (month and day) on which the fault was first detected is displayed. .
Temperature - first occurrence:	The value indicates the temperature (temperature sensor in the gateway) at the time the fault occurred. The temperature of the fibre optic transmitter is monitored: max 85°C.
Speed - first occurrence	The value indicates the vehicle speed at the time the fault occurred.
Supply voltage - first occurrence	The value indicates the voltage at the time the fault occurred.
Hourmeter - first occurrence	The value indicates the operating hours at the time the fault first occurred.
Last occurrence (month, day):	The date (month and day) on which the fault was last detected is displayed.

Fault type - Frequency counter/Temperature/Voltage; Speed/Time of occurrence.	
Temperature - last occurrence:	The value indicates the temperature (temperature sensor in the gateway) at the time the fault was last detected. The temperature of the fibre optic transmitter (FOT) is monitored: max 85 °C.
Supply voltage - last occurrence	The value indicates the voltage at the time the fault last occurred.
Hourmeter - last occurrence	The value indicates the operating hours at the time the fault was last detected.

Display '*' in the menu 'Control modules' and menu 'PCM2 MOST component check'.

Different required and actual installed components lists

When the 'automatic control module search' is complete, the following display '*' appears in front of the control module description 'PCM2' in the 'Control modules' menu, as well as in the 'PCM2 MMI function selection' in front of the entry 'MOST required installed components list' if the 9588 Porsche System Tester II establishes a difference between the required and actual installed components list and there is no fault code in one of the fault memories of the MOST control modules.

If there is a fault code present in one of the MOST control modules, the display '*' is only shown in the 'PCM2 MMI function selection' in front of the line 'MOST required installed components list'.

If there is a display in the menu Control module, an existing fault code has priority and a '#' is set.

Vehicle hand-over

The PCM2 is converted to delivery mode (low-current mode) in production. As known from other systems (alarm system, instrument cluster, roll-over bar), the PCM2 must be activated with the 9588 Porsche System Tester II.

1. 9588 Connect and start the Porsche System Tester II and switch on the ignition.
2. Select the menu item 'Special functions' and press the [>>] key.
3. Select the menu item 'Vehicle hand-over' and press the [>>] key.
4. Follow the instructions of the 9588 Porsche System Tester II.

Country-specific tuner settings

The following country-specific tuner settings can be coded:

- Europe.
- North America.
- South America.
- Australia.
- Asia.
- South Africa.
- Japan.

Coding country-specific tuner settings

1. 9588 Connect and start the Porsche System Tester II and switch on the ignition.
2. Select vehicle type 911 (996) and press the [>>] key.
3. Select the menu item 'PCM2 GW' and press the [>>] key.
4. Select the 'Coding' menu item and press the [>>] key.
5. Select the menu item 'Tuner parameters' and press the [>>] key.
6. Take the country-specific code as it appears in the table, enter it in the form and code with the [F8] key.

Coding PCM2

1. 9588 Connect and start the Porsche System Tester II and switch on the ignition.
2. Select '911 Turbo (996)' in the Vehicle type menu and confirm with the [>>] key.
3. Select 'PCM2' in the control modules selection and confirm with the [>>] key
4. Select 'PCM2 GW' in the PCM2 function selection and confirm with the [>>] key.
5. Select 'Coding' in the PCM2 GW function selection and confirm with the [>>] key.
6. Select 'PCM2 code' in the PCM2 GW coding and confirm with the [>>] key.
7. Take the PCM2 code from 'IPAS', enter it in the form and code with the [F8] key.

Production mode

If the MOST control module is set to Production mode on, it is in low-current mode. The display remains black, the control module cannot function.

1. 9588 Connect and start the Porsche System Tester II and switch on the ignition.
2. Select '911 Turbo (996)' in the Vehicle type menu and confirm with the [>>] key.
3. Select 'PCM2' in the control modules selection and confirm with the [>>] key
4. Select 'PCM2 GW' in the control modules selection and confirm with the [>>] key.
5. Select 'Coding' in the PCM2 GW function selection and confirm with the [>>] key.
6. Select 'Production mode' in the PCM2 GW coding and confirm with the [>>] key.
7. Select 'Production mode off' menu and code with the [F8] key.

The following options can be coded:

- Production mode off
- Production mode on

Control module replacement - PCM2

The PCM2 is supplied in 'production mode on' in new vehicles and as a spare part. Before putting the PCM2 into operation, the 'Production mode on' must be set to 'Production mode off' in the Coding menu when selecting the function of the PCM2-GW, and the vehicle must be locked and secure. Afterwards, PCM2 is functional. The procedure is explained in detail under 'Production mode'.

Navigation tools

⚠ □□□□□□□

Danger of injury through triggering of driver's airbag

- ***Never hang the Porsche System Tester II No. 9588 over the steering wheel.***
- ***Always place tools and special tools outside the functioning range of all airbags!***

ℹ □□□□□

□□□□□□□□□□□□□□□□

□□□□□□□□ □ □□□□□□□□□□□□□□□□□□□□ □□□□

►

97

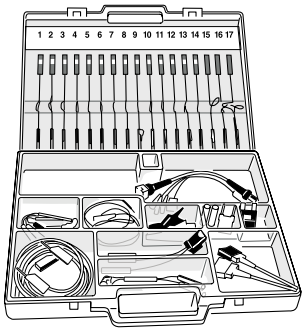

9684 000 721 968 40

□□□□□□□□□□□□□□□□□□□□□□□□□□□□□□□□ □□□□□

►

03, 97

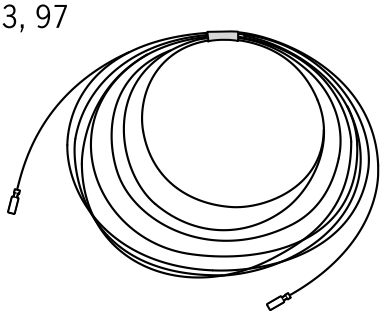

9712 000 721 971 20

□□□□□□□□□□□□□□□□□□□

Component arrangement - navigation

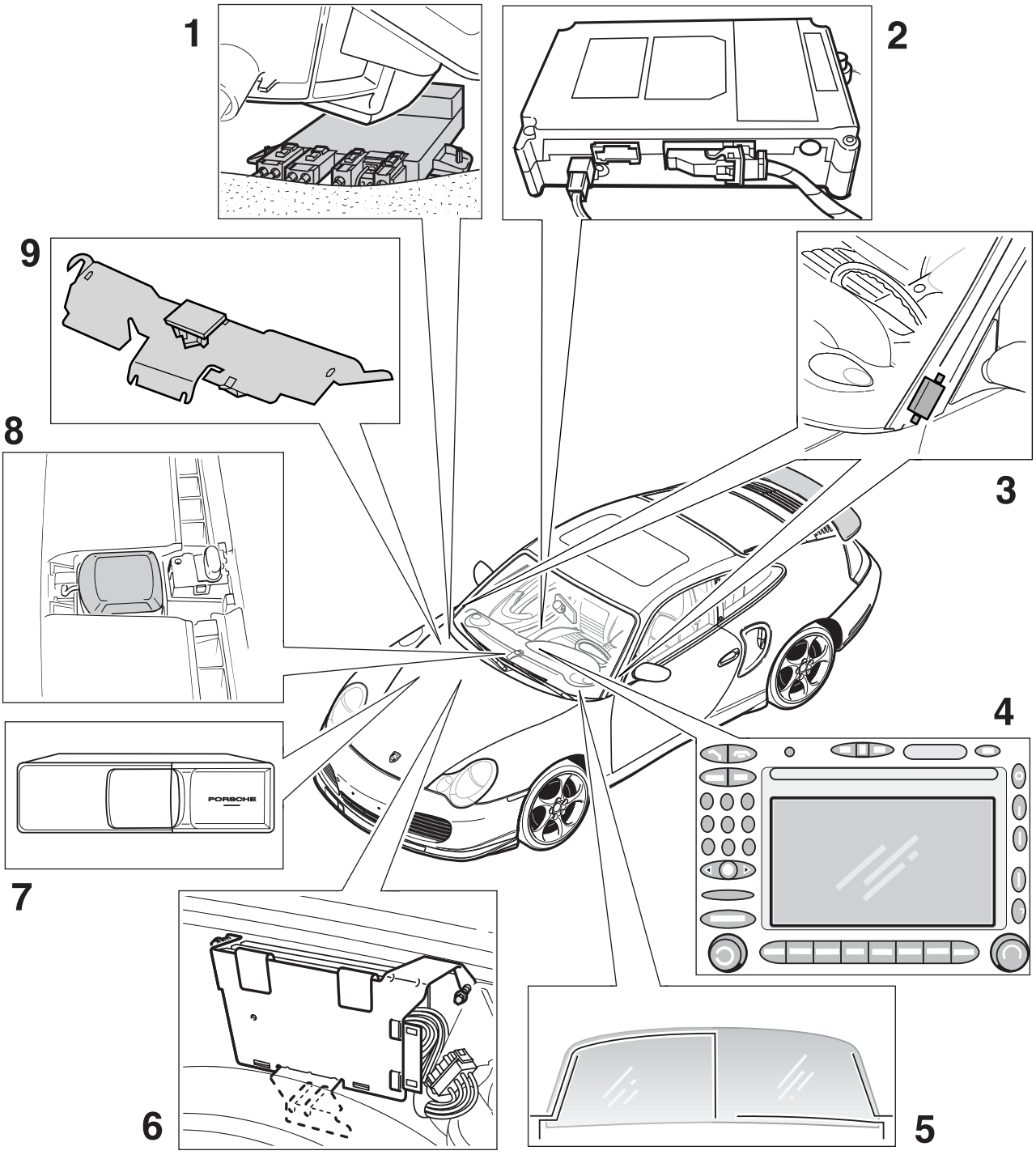

1 - Telephone/telematics

2 - PCM2

3 - Windscreen antenna

4 - Diversity control unit

5 - Amplifier C 2

6 - CD changer 23

7 - GPS antenna

Navigation connector assignment

Connector assignment

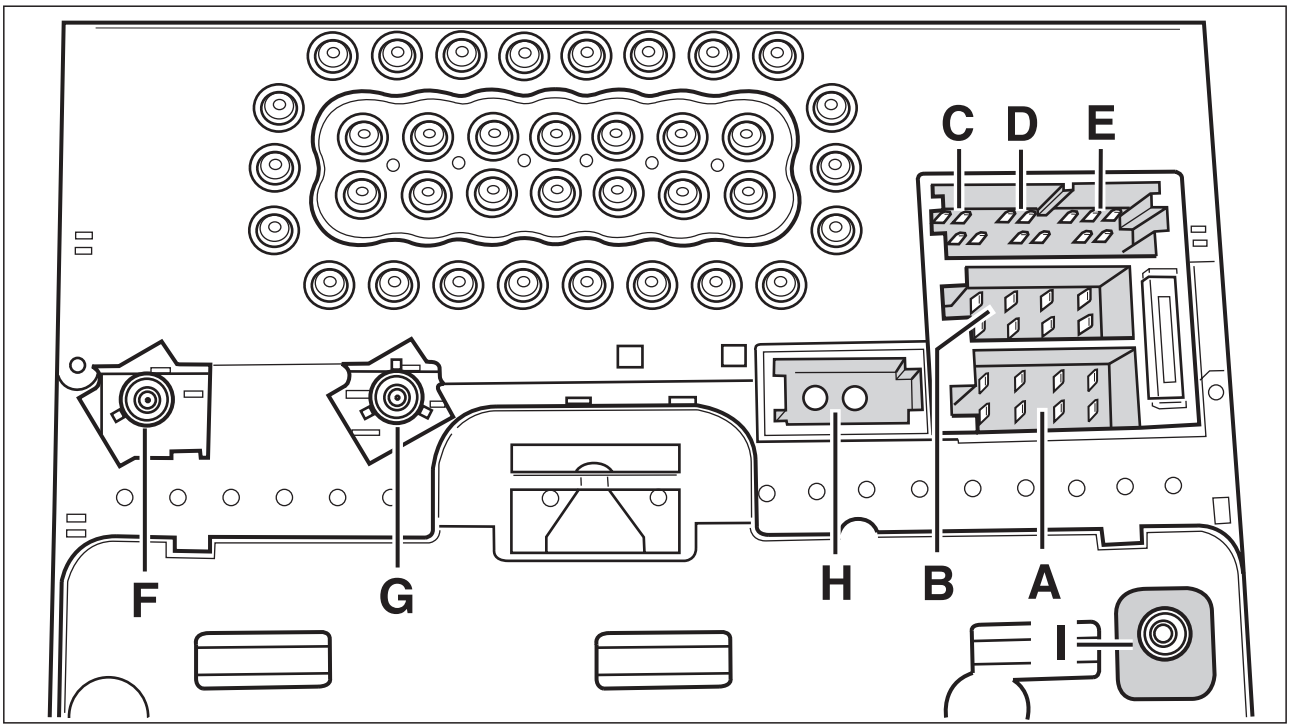

□□□□□□□□□□□□□□□□

□□□□□□□□□□□□□□

□□□

□□□□□□□□□□□	□□□□□□	□□□□□□	□□□□□□	□□□□□□□	□□□□□□□	□□□□□□□	□□□□	□□□□□□
□□□□□□□□□□□□□□□

□□□

□□□□□□□□□	□□□□□□□□
♦ □□□□	□□□□□□□□□□□□□□□

□□□□□□□□	□□□□□□□□
♦ □□□□□□□□□□□□□□□□□

□□□□□□□□□	□□□□□□□□
♦ □□□□□□□□□	□□□□□□□□□□□□□□□

□□□□□□□□	□□□□□□□□
♦ □□□□□□□□□□□□□□	□□□□□□□□□□□□□□□□□

□□□□□□□□□	□□□□□□□□
♦ □□□□□□□□□□□	□□□□□□□□□□□□□□□

□□□□□□□□	□□□□□□□□
♦ □□□□	□□□□□□□□□□□□□□□□□

□□ □□□□

[illegible]

[illegible]

[illegible]

- [illegible]
- [illegible]
- [illegible]
- [illegible]
- [illegible]
- [illegible]
- [illegible]
- [illegible]
- [illegible]
- [illegible]

[illegible]

[illegible]

1. [illegible]
2. [illegible] >> [illegible]
3. [illegible] >> [illegible]
4. [illegible]

[illegible]

[illegible]

□□□□□□□□□	□□□□□□□□
◆ □□□□□□□□□□□□□□□	□□□□□□□□□□□□□□□

□□□

□□□□□□□□□	□□□□□□□□
◆ □□□□□□□□□□□□□□□□□□□□□□	□□□□□□□□□□□□□□□□□□□□

□□□

□□□□□□□□□□□□□□

□□□

□□□

□□□ □ □ □□□□□□□ □ □ □□□ □ □ □ □□□□ □□□ □□□□ □□□ □ □ □□□ □ □□□ □□□□ □□□ □□□

□□□□□□□□□□□□□□□□			□□□□□□□□□	□□□□□□□□
□	□□□□□□□□□□□□□□□□

□□□

□□□ □ □ □□□□□□□ □ □ □□□ □ □ □ □□□□ □

□□□□□□□□□□□□□□□□			□□□□□□□□	□□□□□□□
□	□□□□□□□□□□□□□□□□

□□□

□□□ □ □ □□□□□□□ □ □ □□□ □ □ □ □□□□ □

□□□□□□□□□□□□□□□□			□□□□□□□□	□□□□□□□
□	□□□□□□□□□□□□□□□□

□□□

□□□ □ □ □□□□□□□ □ □ □□□ □ □ □ □□□□ □

□□□□□□□□□□□□□□□□			□□□□□□□□	□□□□□□□□
□	□□□□□□□□□□□□□□□□	♦ □□□□□□□□□□□□□□□□

PCM2/CDR23 (CDR23)

CDR23 - Introduction

The manual contains the diagnosis for the following system:

CDR23

General instructions/safety instructions

The following points must be observed during vehicle diagnosis:

- After the battery is connected, volatile memories must be reprogrammed. In the case of radio coding and tuning, the customer must be informed of decoding and the deleted tuner memory.
- After the battery has been connected, the instructions in the assembly ⇒ 9; Rep. Gr. - ; Work instructions after disconnecting the battery must be observed.
- Deactivate the 'automatic traffic announcement' before beginning the diagnosis on CDR23. If this is not done, the system will crash (applies only to software version < 03).
- When working on the optical waveguide, please observe the instructions in assembly ⇒ 9; Rep. Gr. 9768; Optical waveguide - MOST bus.
- After troubleshooting or repairs, erase the fault memory with the 9588 Porsche System Tester II and carry out a test drive.
- After the test drive, read out the fault memory with the 9588 Porsche System Tester II again.

Danger!

Danger of injury through triggering of driver's airbag

- ***9588 Never hang the Porsche System Tester II over the steering wheel.***

Caution!

Danger of damage due to improper handling of the battery and the control module connectors!

- ***Never disconnect battery with engine running.***

- ***Never start engine without securely connected battery.***
- ***Never pull off or push on plug connections for the control modules or other electronic components when the ignition is switched on.***

General information on the fault memory

Fault code setting conditions

Fault codes can be set in several circumstances, e.g.:

- battery disconnected.
- plug connections disconnected.
- power failure.

In these circumstances, no fault is present in the system and the fault memory must be erased.

Fault memory Info key F8

In order to be able to assess the fault exactly, the fault memory Info key F8 must be pressed. This information should be saved using the Save key F4 and printed out. If a fault code is stored with "not present" status and no other problems are present, then the fault memory must be erased.

Fault type - Frequency counter/Temperature/Voltage; Speed/Time of occurrence.

Supply voltage fault type	The display shows which fault type has occurred: • Undervoltage '< 9 V' • Overvoltage ' > 16 V'
Open circuit in distribution line	The value indicates the status of the MOST ring when the fault occurred. • Optically faulty • Electrically faulty
Frequency counter	When a fault first occurs, a fault entry is made in the fault memory and the counter is simultaneously set to 50. If a fault is present, the counter is incremented by 1 for each "ignition on". The maximum count is 255. The counter is decremented if the fault is no longer present. The fault memory is automatically erased when the counter reaches 0. If the error occurs again when the counter is between 1 and 49, the counter is reset to 50.
Temperature:	The value indicates the temperature (temperature sensor in the gateway) at the time the fault occurred. The temperature of the fibre optic transmitter is monitored: max 85°C.

Fault type - Frequency counter/Temperature/Voltage; Speed/Time of occurrence.	
Voltage	The value indicates the voltage at the time the fault occurred.
Vehicle speed	The value indicates the vehicle speed at the time the fault occurred.

Vehicle hand-over

Note!

The CDR23 is transferred into production mode (low-current mode) in production. As known from other systems (alarm system, instrument cluster, amplifier, roll-over bar), the CDR23 must be activated with the 9588 Porsche System Tester II.

1. 9588 Connect and start the Porsche System Tester II and switch on the ignition.
2. Select the menu item 'Special functions' and press the [>>] key.
3. Select the menu item 'Vehicle hand-over' and press the [>>] key.
4. Follow the instructions of the 9588 Porsche System Tester II.

Display '*' in the menu 'Control modules CDR23' and menu 'MOST component check'.

Different required and actual installed components lists

When the 'automatic control module search' is complete, the following display '*' appears in front of the control module description 'PCM2' in the 'Control modules' menu, as well as in the 'PCM2 MMI function selection' in front of the entry 'MOST required installed components list' if the 9588 Porsche System Tester II establishes a difference between the required and actual installed components list and there is no fault code in one of the fault memories of the MOST control modules.

If there is a fault code present in one of the MOST control modules, the display '*' is only shown in the 'PCM2 MMI function selection' in front of the line 'MOST required installed components list'.

If there is a display in the menu Control module, an existing fault code has priority and a '#' is set.

CDR23 Replacement

The CDR23 is provided in 'active production mode' as a spare part. Each time the vehicle is started, the stored PCM2 code is com-

pared with that in the instrument cluster. If they match the device is operational.

If a match is found, the device is operational. No further checks are made while the device is connected to the vehicle electrical system.

If no match is found, the device switches off after 30 seconds and the 'PROTECTED' message appears in the display. The device is not operational. Coding of the PCM2 (from IPAS) must be carried out.

Production mode

If the MOST control module is set to Production mode on, it is in low-current mode. The display remains black, the control module cannot function.

1. 9588 Connect and start the Porsche System Tester II and switch on the ignition.
2. Select '911 Turbo (996)' in the Vehicle type menu and confirm with the [>>] key.
3. Select 'CDR23' in the control modules selection and confirm with the [>>] key.
4. Select 'Coding' in the CDR23 function selection and confirm with the [>>] key.
5. Select 'Production mode' in the CDR23 coding and confirm with the [>>] key.
6. Select 'Production mode off' menu and code with the [F8] key.

The following options can be coded:

- Production mode off.
- Production mode on.

□ □ □ □ □□□ □ □□□

□□□□□□□

Danger of injury through triggering of driver's airbag

- ***Never hang the Porsche System Tester II No. 9588 over the steering wheel.***
- ***Always place tools and special tools outside the functioning range of all airbags!***

□□□□□

□□□□□□□□□□□□□□□□

□□□

Component arrangement - CDR23

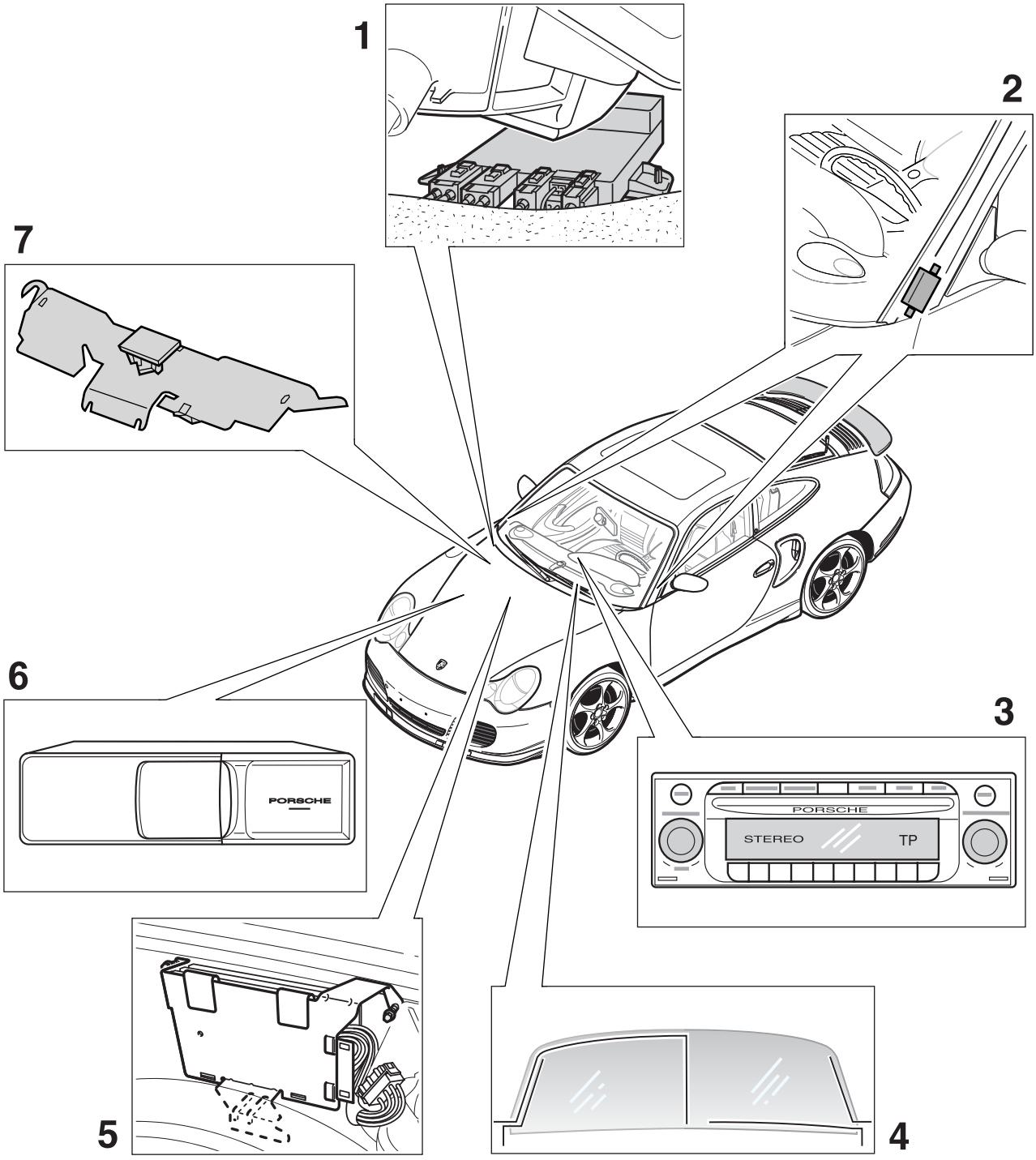

1 - Diversity antenna control unit.

2 - Antenna amplifiers left and right.

3 - CDR23

4 - Windscreen antenna

5 - External amplifier (option Harman/BOSE).

6 - CD changer

7 - GSM antenna

Loudspeaker basic system

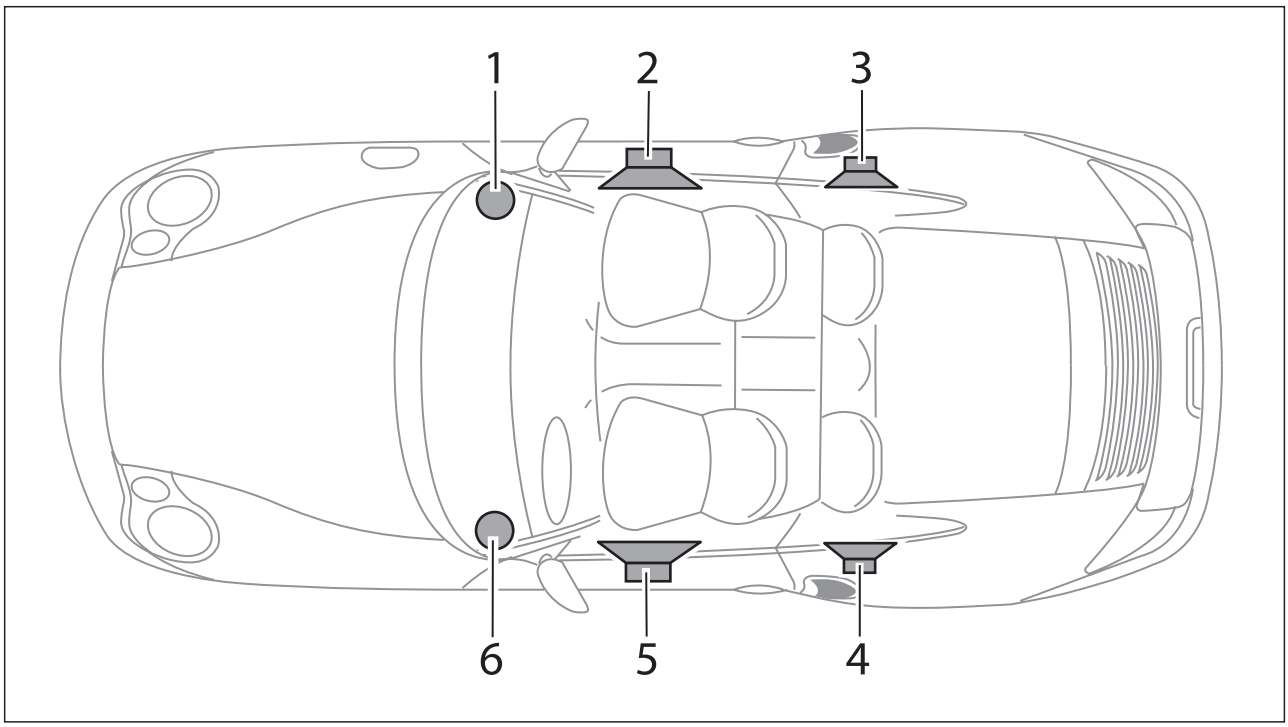

1 - Loudspeaker, front right.

2 - Loudspeaker, door right.

3 - Loudspeaker, rear door right.

4 - Loudspeaker, rear door left.

5 - Loudspeaker, front door left.

6 - Loudspeaker, front left.

Loudspeaker sound package

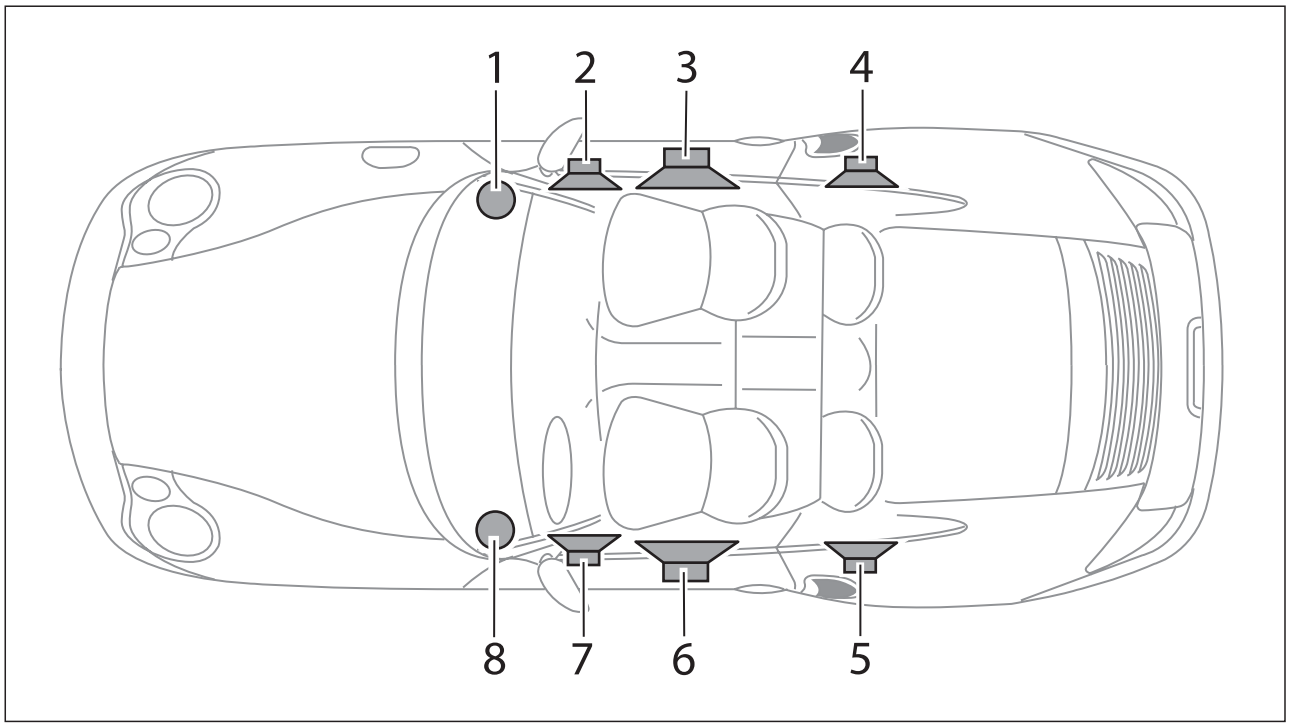

1 - High-pitch loudspeaker, dashboard right.

2 - Middle-pitch loudspeaker, front door right.

3 - Low-pitch loudspeaker, front door right.

4 - Loudspeaker, rear door right.

5 - Loudspeaker, rear door left.

6 - Low-pitch loudspeaker, front door left.

7 - Middle-pitch loudspeaker, front door left.

8 - High-pitch loudspeaker, dashboard left.

High-End loudspeaker

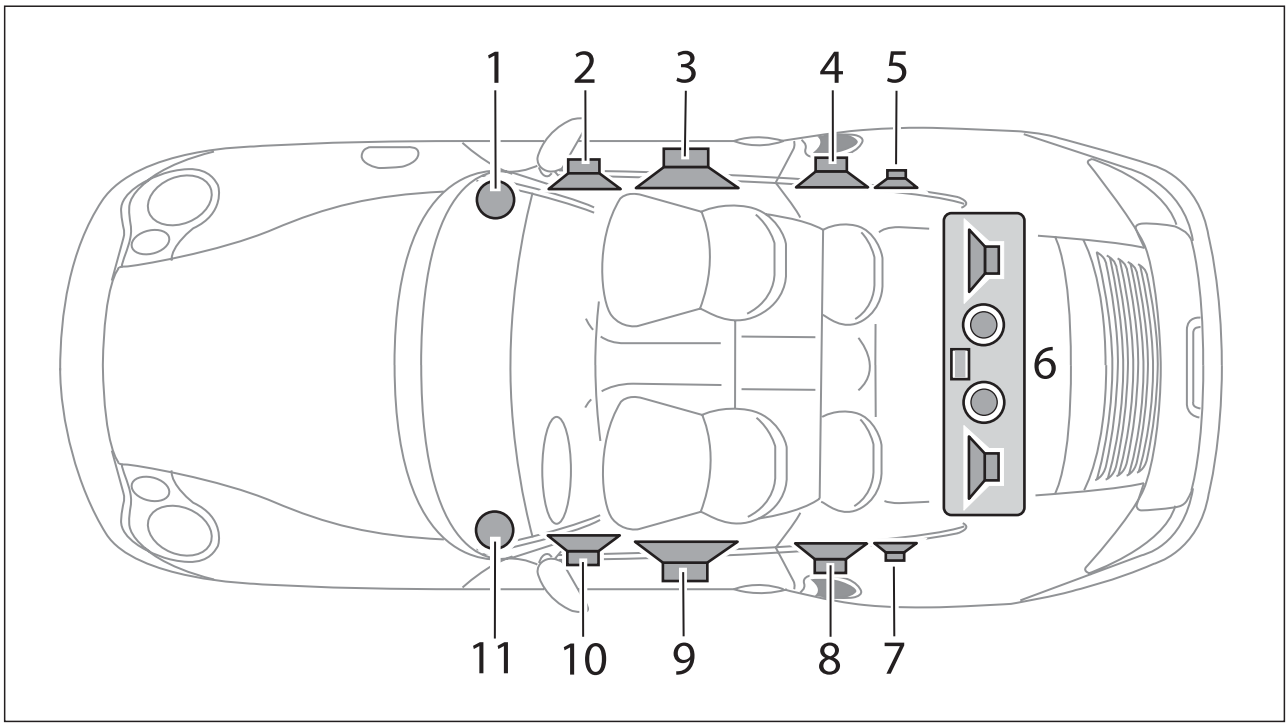

1 - High-pitch loudspeaker, dashboard right.
2 - Middle-pitch loudspeaker, front door right.
3 - Low-pitch loudspeaker, front door right.
4 - Middle-pitch loudspeaker, rear door right.
5 - High-pitch loudspeaker, rear door right.
6 - Subwoofer
7 - High-pitch loudspeaker, rear door left.
8 - Middle-pitch loudspeaker, rear door left.
9 - Low-pitch loudspeaker, door left.
10 - Middle-pitch loudspeaker, door left.
11 - High-pitch loudspeaker, dashboard left.

□□□

□□□□□□□□□□□□□□

□ □ □ □ □□□ □ □□□□□ □□□□□□ □□□□□ □ □ □□□□ □

□□□ □ □□□ □□□□ □□□□ □ □□□□□ □ □□□□ □□□□ □□□□ □ □

□□□□□□□□□□□□□□□□

□□ □□□□

□ □ □□□ □

□□□□□□□□□□□□□□□□

□□□□□□□□□	□□□□□□□□
♦ □□□□□□□□□□□□□□

□□□□□□□□	□□□□□□□□
♦ □□□□□□□□□□□□□□□□□

□□□□□□□□□	□□□□□□□□
♦ □□□□□□□□□□□□□□□	□□□□□□□□□□□□□□□

□□□

□ □□□ □□□□ □□□ □ □

□□□□□□□□□□□□□□

□□□

□□□□□□□□	□□□□□□□
◆ □□□□□□□□□□□□□□

□□□

□□□□□□□□□	□□□□□□□□
♦ □□□□□□□□□□□□□□□

□□□

□□□□□□□□□	□□□□□□□□
♦ □□□□□□□□□	□□□□□□□□□□□□□□□

□□□

- □□□□□□□□□□□□□□□□□□□□
- □□□□□□□□□□□□□□□

□□□□□□□□□	□□□□□□□□
◆ □□□□□□□□□□□□□□□□□□□□	□□□□□□□□□□□□□□□□□□□□

□□□

□□□

□□□

□□□ □ □ □□□□□□□ □ □ □□□ □ □ □ □□□□ □

□□□□□□□□□□□□□□□□			□□□□□□□□	□□□□□□□□
□	□□□□□□□□□□□□□□	♦ □□□□□□□□□□□□□□□	⇒□□□□□□□	□□□□□□□□□□□□□□□□

□□□

□□□ □ □ □□□□□□□ □ □ □□□ □ □ □ □□□□ □

□□□□□□□□□□□□□□□□□□			□□□□□□□□□	□□□□□□□□
□	□□□□□□□□□□□□□□□□□□

□□□

□□□

□□□ □ □ □□□□□□□ □ □ □□□ □ □ □ □□□□ □

□□□□□□□□□□□□□□□□□			□□□□□□□□□	□□□□□□□□
□	□□□□□□□□□□□□□□□□□

8007 CDR23

Open circuit in diagnosis distribution line

Diagnostic conditions

- Ignition on
- Start CDR23.

Possible cause of fault

Diagnosis distribution line: short circuit to ground/ B+ or open circuit.

Optical waveguide damaged.

Optical waveguide broken.

Optical waveguide kinked.

The receiving MOST control module is faulty.

CDR23 faulty.

!

- *The diagnosis distribution line is connected to the following MOST control modules:*
- *CDR23 as of model year 2003*
- *The MOST optical waveguide is connected to the following control modules:*
- *Amplifier*
- *CD changer*

Affected pin

CDR23, plug C, pin 4

Diagnosis/troubleshooting

Work instruction			Display OK	If not OK
1	Reading out CDR23 fault memory	♦ Connect the Porsche System Tester II No. 9588 to the diagnostic socket; switch on the ignition and the Porsche System Tester II No. 9588. ♦ Select vehicle type 911 (996) and start the automatic control module search. ♦ In the Control units menu, select 'CDR23'. ♦ Click the [> >] key in the 'Fault memory' menu. ♦ Read out fault memory. ♦ Erase fault memory. ♦ Remove ignition key and switch on ignition again. ♦ Read out fault memory. ♦ Extract ambient data, press the [>>] key.	The fault is remedied. → End	Fault code is still displayed. ⇒ Step 2
2	Checking MOST components	♦ In the Control units menu, select 'CDR23'. ♦ Click 'MOST components check' in the function selection menu and start it with the [>>] key. ♦ Wait for the end of the automatic check. ♦ The duration of the check depends on the number of existing MOST control modules. ♦ Press the [>>] key.	♦ CDR23 > amplifier 'optically OK''electrically OK.' ♦ Amplifier > CD changer 'optically OK''electrically OK.' ♦ CD changer > CDR23 'optically OK''electrically OK.' ♦	An optical fault is displayed. ⇒ 3 An electrical fault is displayed. ⇒ 4
3	Optical fault	Replace the relevant optical waveguide between the listed faulty components with the optical waveguide test line No. 9712 that is provided as a special tool. Check MOST components again.	Replace the faulty optical wavelength with the relevant spare part. → End	Replace the relevant receiving MOST control module. ⇒ Step 2

Work instruction			Display OK	If not OK
4	Checking open circuit in diagnosis distribution line	Check diagnosis distribution line between the listed faulty components for an open circuit. ♦ Switch off ignition. ♦ Disconnect the plug connections from the existing MOST control modules. ♦ Measure the resistance of the diagnosis distribution line between the relevant plug connections.	< 0.5 Ω ⇒ Step 5	Remove open circuit in diagnosis distribution line. → End
5	Checking diagnosis distribution line for short circuit to ground	Check diagnosis distribution line between the listed faulty components for short circuit to ground. ♦ Switch off ignition. ♦ Disconnect the plug connections from the existing MOST control modules. ♦ Measure the resistance of the diagnosis distribution line to the ground body.	∞ Ω ⇒ Step 6	Remove short circuit to ground in diagnosis distribution line. → End
6	Checking diagnosis distribution line for short circuit to B+.	Check diagnosis distribution line between the listed faulty components for short circuit to B+. ♦ Switch off ignition. ♦ Disconnect the plug connections from the existing MOST control modules. ♦ Measure the voltage of the diagnosis distribution line to the ground body. ♦ Switch ignition on.	0 V ⇒ Step 7	Remove short circuit to B+ in diagnosis distribution line. → End
7	Replacing PCM2		→ End	

[illegible]

[illegible]

[illegible]

- [illegible]
- [illegible]

[illegible]

- [illegible]
- [illegible]
- [illegible]

[illegible]

- [illegible]
- [illegible]
- [illegible]

[illegible]

[illegible]

□□□□ □ □□□□□□□□ □ □□□□ □ □ □□□□ □

□□□□□□□□□□□□□□□□			□□□□□□□□□	□□□□□□□□
□	□□□□□□□□□□□□□□□□

□□□□□□□□□□□□□□□□			□□□□□□□□□	□□□□□□□□□
		□□□□□□□□□□□□□□□□□

□□□

□□□□ □□□□ □□□□□□□

□□□□□□□□□□□□□□□

□□□

□□□

□□□□ □□□□ □□□□□□

□□□□□□□□□□□□□□□

□□□

□□□

□□□

□□□

□□□ □ □ □□□□□□□ □ □ □□□ □ □ □ □□□□ □

□□□□□□□□□□□□□□□□			□□□□□□□□	□□□□□□□□
□	□□□□□□□□□□□□□□□□	♦ □□□□□□□□□□□□□□□□

□□□

□□□□ □ □□□□ □□□□ □□□ □ □ □ □ □

□□□□□□□□□□□□□□□□

- □□□□□□□□□□□□□□□

□□□

Tools - CD changer

□□□□□□□

Danger of injury through triggering of driver's airbag

- ***Never hang the Porsche System Tester II No. 9588 over the steering wheel.***
- ***Always place tools and special tools outside the functioning range of all airbags!***

□□□□□

□□□□□□□□□□□□□□□□

□□□□□□□□ □ □□□□□□□□□

Component arrangement - CD changer

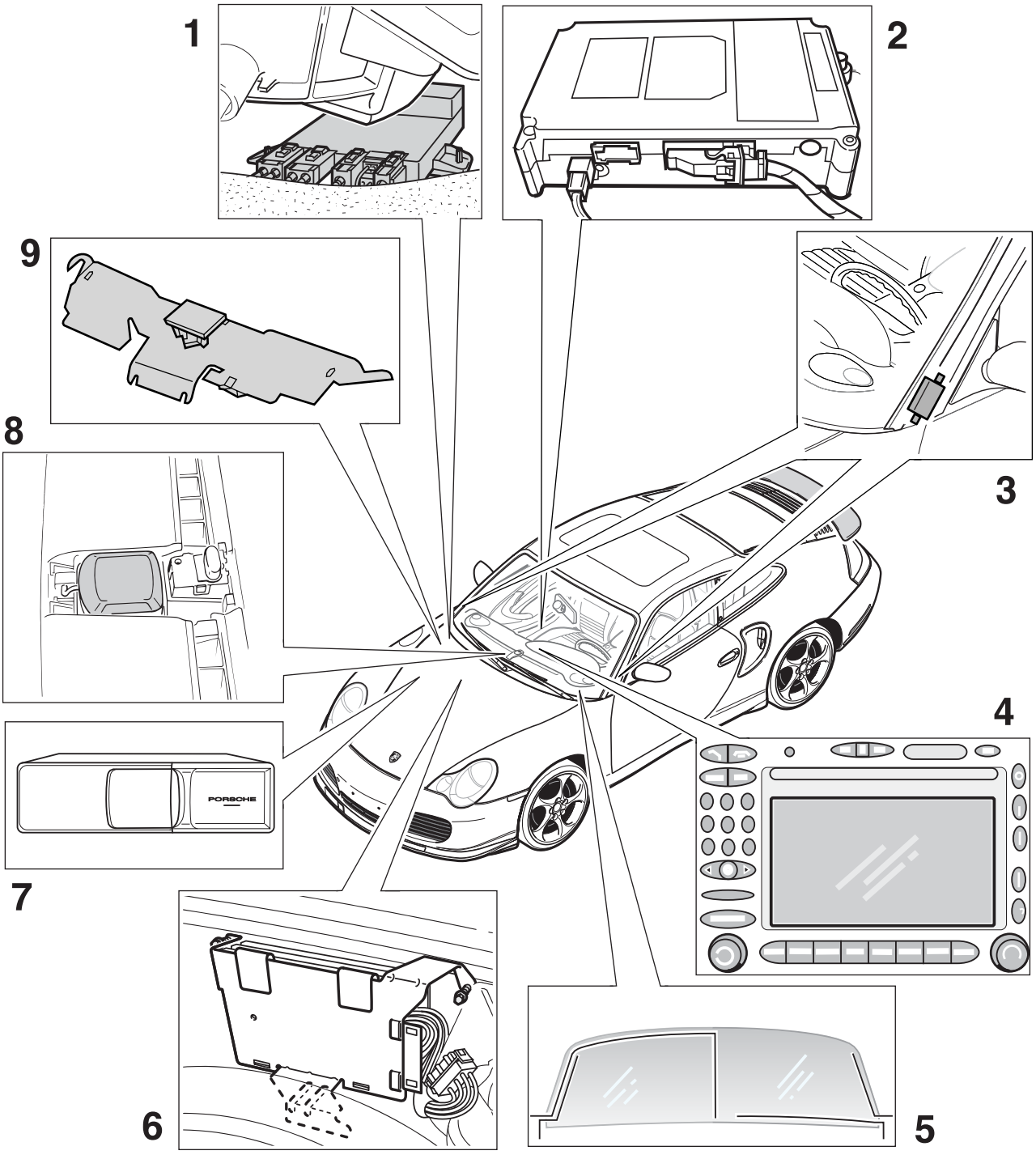

1 - Telephone/telematics
2 - PCM2/radio
3 - Windscreen antenna
4 - Diversity control unit
5 - Amplifier C 2
6 - CD changer 23
7 - GPS antenna

Loudspeaker basic system

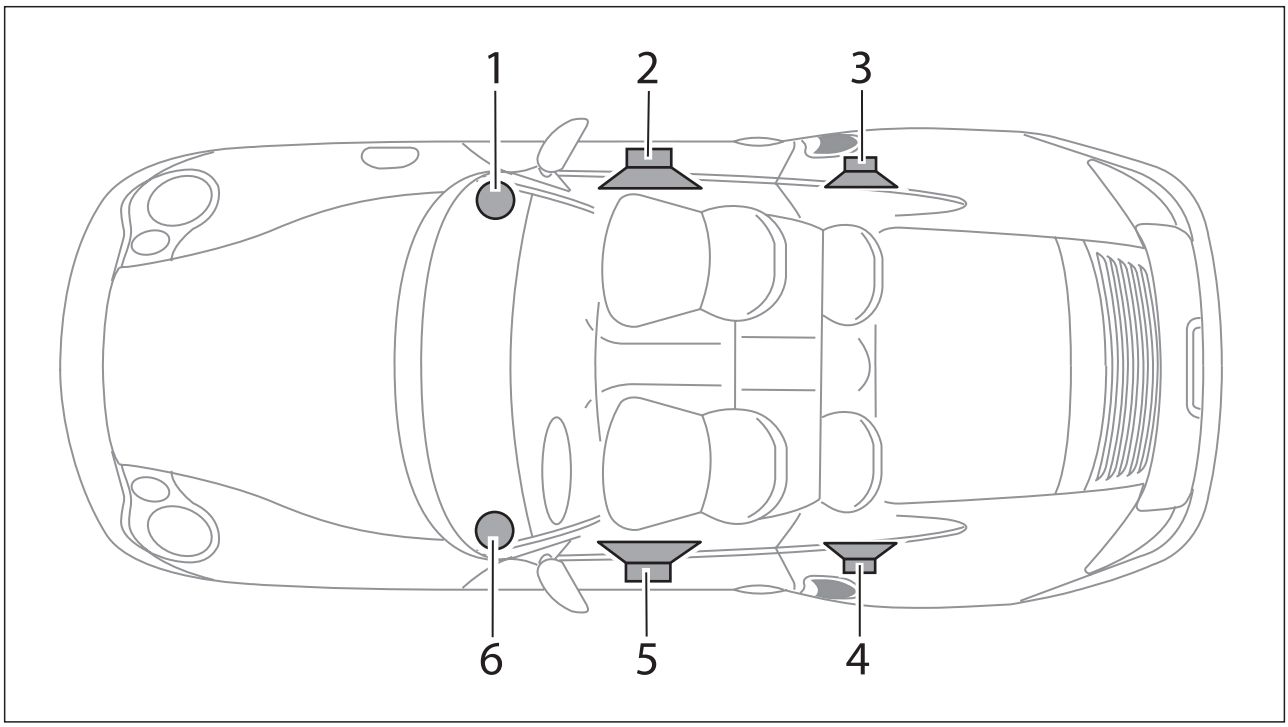

1 - Loudspeaker, front right.
2 - Loudspeaker, door right.
3 - Loudspeaker, rear door right.
4 - Loudspeaker, rear door left.
5 - Loudspeaker, front door left.
6 - Loudspeaker, front left.

Loudspeaker sound package

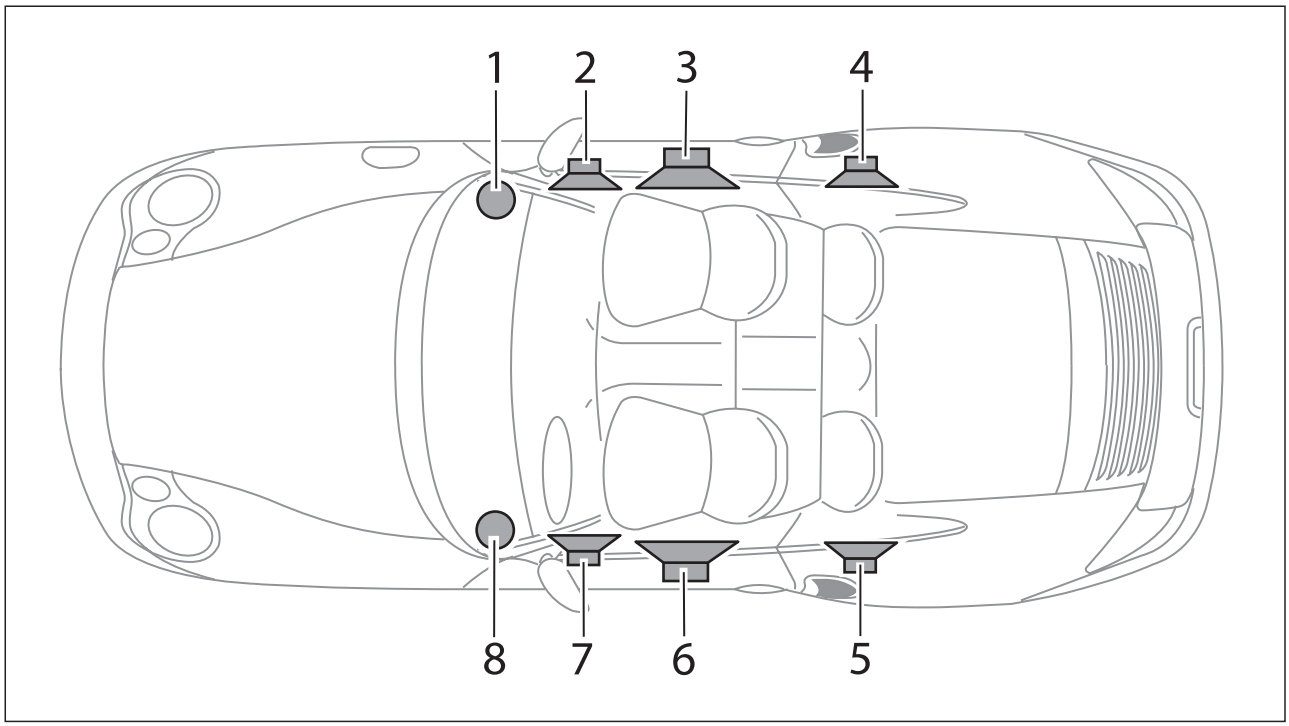

1 - High-pitch loudspeaker, dashboard right.

2 - Middle-pitch loudspeaker, front door right.

3 - Low-pitch loudspeaker, front door right.

4 - Loudspeaker, rear door right.

5 - Loudspeaker, rear door left.

6 - Low-pitch loudspeaker, front door left.

7 - Middle-pitch loudspeaker, front door left.

8 - High-pitch loudspeaker, dashboard left.

High-End loudspeaker

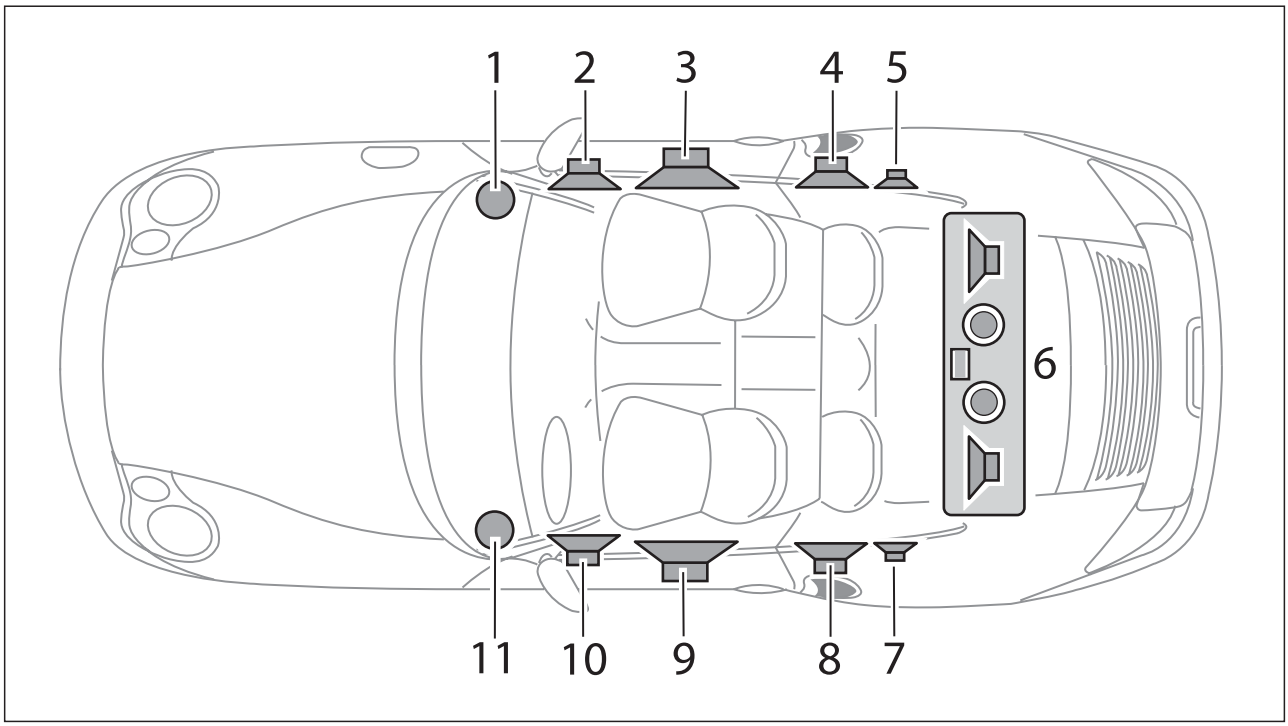

1 - High-pitch loudspeaker, dashboard right.
2 - Middle-pitch loudspeaker, front door right.
3 - Low-pitch loudspeaker, front door right.
4 - Middle-pitch loudspeaker, rear door right.
5 - High-pitch loudspeaker, rear door right.
6 - Subwoofer
7 - High-pitch loudspeaker, rear door left.
8 - Middle-pitch loudspeaker, rear door left.
9 - Low-pitch loudspeaker, door left.
10 - Middle-pitch loudspeaker, door left.
11 - High-pitch loudspeaker, dashboard left.

CD changer connector assignment

CD changer connector assignment

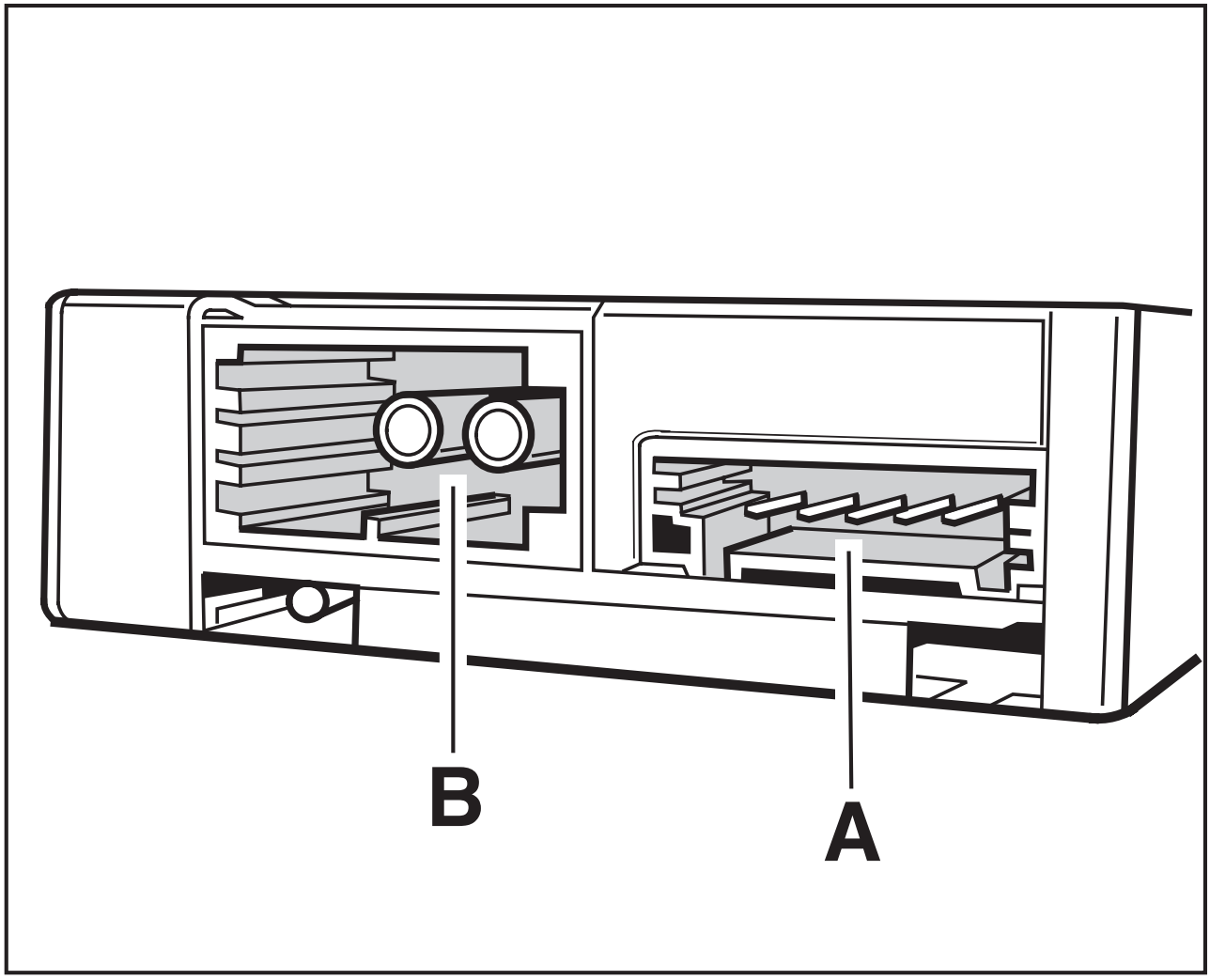

Connector A

Pin	Designation	Pin	Designation
A 1	Pin 30	A 4	Not used
A 2	Pin 31	A 5	Not used
A 3	Wake-up/diagnosis	A 6	Not used

Connector B

Pin	Designation	Pin	Designation
B1	Optical waveguide	B 2	Optical waveguide

Control unit function - CD changer

Terminating resistors on the CAN

Terminating resistors are fitted to each end of the wiring to prevent reflection on the wiring. These terminating resistors are integrated into each control unit. The interconnection prevents the resistors from being measured with the ohmmeter from the outside.

CAN comfort

Communication between the Porsche System Tester II No. 9588 and the MOST control units only takes place via the K lead to the instrument cluster. The data is transferred from the instrument cluster gateway to the MOST control units, via CAN Comfort to the PCM2 gateway, via the electrical MOST in the PCM2 and via the optical MOST outside of the PCM2.

CD changer (CDC)

The CDC is available as an optional feature and is linked to the PCM2 via the optical waveguide.

Coding

It is possible to extract the chassis number and to code the PCM2 on a country-specific basis in the 'Modify coding' menu.

Menu item	Function
♦ Chassis number	It is possible to extract or enter the chassis number under this menu item after replacing the PCM2. ♦ Connect and start the Porsche System Tester II No. 9588 and switch on the ignition ♦ Select '911 Turbo (996)' in the vehicle type menu and confirm with the [→|] key. ♦ Select 'PCM' in the control units selection and confirm with the [>>] key. ♦ Select 'PCM2/CDR23' in the control units selection and confirm with the [>>] key. ♦ Select 'PCM2 GW' in the PCM2 function selection and confirm with the [>>] key ♦ Select menu item Coding ♦ Select the "Chassis number" menu item ♦ Enter the chassis number and code with the [F8] key
♦ Country coding	Using this menu item, you can code the country code. ♦ Connect and start the Porsche System Tester II No. 9588 and switch on the ignition ♦ Select '911 Turbo (996)' in the vehicle type menu and confirm with the [→|] key. ♦ Select 'PCM' in the control units selection and confirm with the [>>] key. ♦ Select 'PCM2/CDR23' in the control units selection and confirm with the [>>] key. ♦ Select 'PCM2 GW' in the PCM2 function selection and confirm with the [>>] key ♦ Select the coding menu item and confirm with the [>>] key. ♦ Select the menu item "Country coding" and confirm with the [>>] key. ♦ Select "the relevant country coding" from the menu item that is displayed and code it with the [F8] key

Data transmission error

If errors are detected when the data is decoded, this is known as a data transmission error. The faults can arise when the data is encoded, when the data is transferred through an input level that is optically too low or when the data is decoded. A fault entry is not recorded.

Function of the components

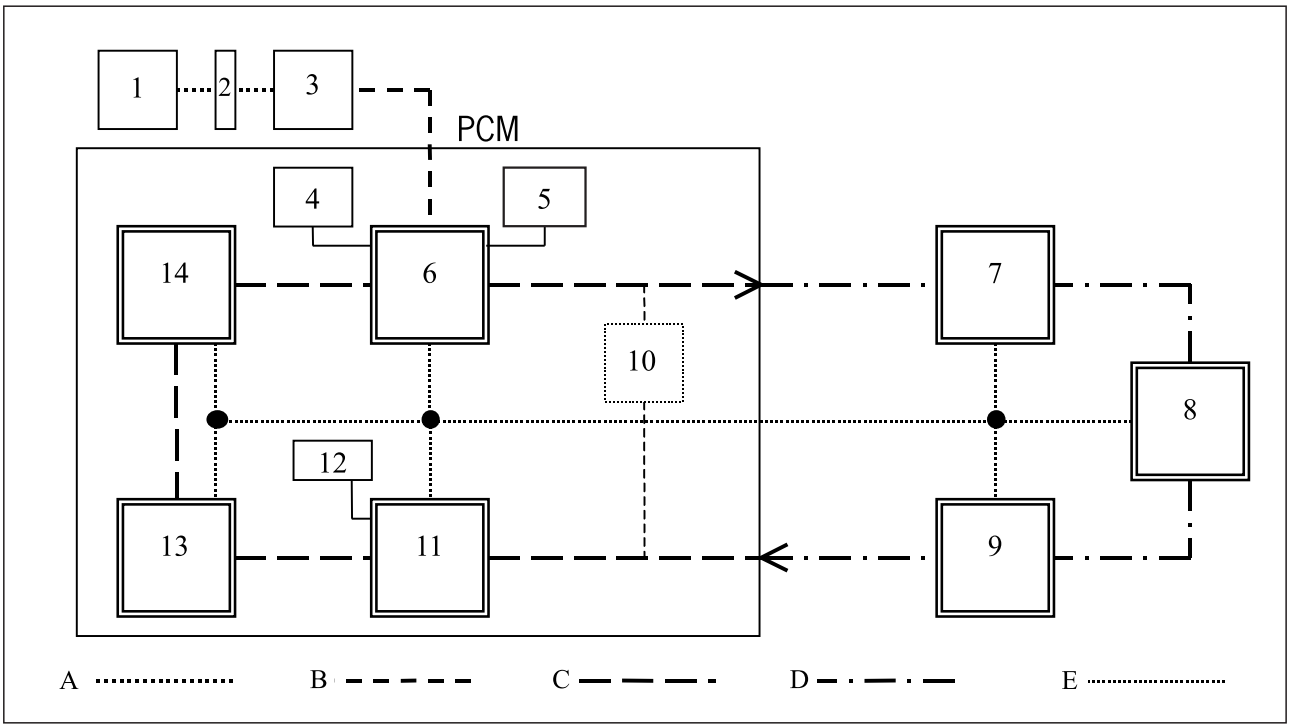

A - K lead
B - CAN comfort
C - Electrical MOST (internal)
D - Optical MOST (external)
E - MOST diagnosis lead
1 - Porsche System Tester II No. 9588
2 - Diagnostic box
3 - Instrument cluster (gateway)
4 - PCM2 (internal amplifier)
5 - PCM2 (tuner)
6 - PCM2 (gateway) (MOST nodes)
7 - External amplifier (MOST nodes)
8 - CDC (CD changer) (MOST nodes)
9 - Telephone/telematics (MOST nodes)
10 - PCM2 (MOST switch)
11 - MMI (Man Machine Interface) (MOST nodes)
12 - PCM2 single CD
13 - Navigation (MOST nodes)
14 - VOCS (voice control system) (MOST nodes)

Gateway

The gateway is integrated in the PCM2/CDR23. Together with the MMI, it is a fixed component of each PCM2/CDR23. It provides a connection to CAN Comfort via its nodes. Diagnostic and useful data is exchanged with the CAN via these nodes.

It creates links to the following systems:

- CAN comfort
- Media Oriented Systems Transport (MOST), external bus (optical)
- Amplifier optional (Harman or BOSE)
- CD changer
- Telephone/telematics

Applies only to PCM2:

- Media Oriented Systems Transport (MOST), internal (electrical)
- Voice control system (VOCS) (optional/insertion)
- Navigation (optional/insertion)
- Man Machine Interface (MMI)
- Single CD

Identification

The diagnosis software number and the part numbers for the PCM2 can be read out under this menu item.

1. Connect and start the Porsche System Tester II No. 9588 and switch on the ignition
2. Select '911 Turbo (996)' in the vehicle type menu and confirm with the [→|] key.
3. Select 'PCM' in the control units selection and confirm with the [>>] key.
4. Select 'PCM2/CDR23' in the control units selection and confirm with the [>>] key.
5. Select 'PCM2 GW' in the PCM2 function selection and confirm with the [>>] key
6. Select the "Identification" menu item and press the [>>] key
7. "Diagnosis software number; PCM2 part number." appears on the display

Actual values

It is possible to read out the unlock counter under the 'Actual values' menu item.

Menu item	Function
♦ Unlock counter	Under this menu item, it is possible to check the electrical and optical MOST during troubleshooting. ♦ Connect and start the Porsche System Tester II No. 9588 and switch on the ignition ♦ Connect and start the Porsche System Tester II No. 9588 and switch on the ignition ♦ Select '911 Turbo (996)' in the vehicle type menu and confirm with the [→|] key. ♦ Select 'PCM' in the control units selection and confirm with the [>>] key. ♦ Select 'PCM2/CDR23' in the control units selection and confirm with the [>>] key. ♦ Select 'PCM2 GW' in the PCM2 function selection and confirm with the [>>] key ♦ Select the 'Actual values' menu item and press the [>>] key ♦ Select the "Unlock counter" menu item using the [>] key and press the [>>] key ♦ Read out values from the display field.

Lock/Unlock

A lock occurs when the signal sent from the MMI via the optical/ electrical MOST is understood by the connected MOST control units and a correct optical MOST signal is present at the MMI. Lock is maintained until the signal is unintelligible for quite a long period (several µseconds) ('Unlock').

Man Machine Interface (MMI)

The MMI is part of the PCM2 (on the main board). It carries out the diagnostics of the ring break diagnosis line (stub cable) and the diagnostics of the optical distribution line.

MOST actual and required installed components lists

All MOST control units connected to the PCM2 are entered via the diagnostic tester in the 'required installed components list'. Only the MOST control units recorded in the MOST required installed components list are activated. An 'actual installed components list' of detected devices is written and saved when the PCM2 is started.

MOST - optical/electrical

MOST signals are transferred electrically within the PCM2CDR23 and optically outside of the PCM2/CDR23. Internally, the PCM2 consists of at least 2 nodes (GW and MMI), which are installed in the device and can also be expanded to four nodes by adding the navigation and VOCS nodes. Internally, the CDR23 consists of one node (GW) which is installed in the CDR23.

The data is transferred outside of the PCM2 via the optical waveguide, which creates a connection to the nodes in the external MOST control units such as external amplifiers and/or telephone/ telematics (depending on the equipment). The data is transferred outside of the CDR23 via the optical waveguide, which creates a connection to the nodes in the external MOST control units such as external amplifiers and/or CD changers (depending on the equipment). The gateway node represents the connection to CAN Comfort.

MOST switch

The MOST - switch - switch is part of the PCM2. It keeps the electrical MOST closed if no other MOST control unit is optically connected to the MOST. The MOST switch is opened when a light signal is received from the connected MOST control units.

The following settings can be coded:

- MOST switch open.
- MOST switch closed.

Note!

- *When the PCM2 is replaced, the coding must be performed according to the MOST control units connected.*
- *When the 'Switch closed' parameter is set, the switch remains closed even in existing MOST control units. Communication is then not possible.*

Navigation

The navigation module is designed as a module box, which can be inserted in the PCM2 as an option. After the insertion, an electronic switch is opened automatically and the module is integrated into the MOST ring.

Ring break diagnosis line

The ring break diagnosis line is an electrical lead, which, as a stub cable, connects the individual MOST control units in the system with one another. The existing MOST control units are checked at regular intervals during communication with the control units via the electrical/optical MOST.

Input signals

The following queries can be run using this menu item:

- 3dB loss

Note!

Deactivate the 'automatic traffic announcement' before performing the diagnosis on the PCM2. If this is not done, the diagnosis will abort.

Menu item	Function
♦ 3dB loss	Under this menu item, it is possible to check the electrical and optical MOST during troubleshooting. ♦ Connect and start the Porsche System Tester II No. 9588 and switch on the ignition ♦ Select '911 Turbo (996)' in the vehicle type menu and confirm with the [→|] key. ♦ Select 'PCM' in the control units selection and confirm with the [>>] key. ♦ Select 'PCM2/CDR23' in the control units selection and confirm with the [>>] key. ♦ Select 'PCM2 GW' in the PCM2 function selection and confirm with the [>>] key ♦ Select the Input signals menu item and press the [>>] key ♦ Select the "3dB loss" menu item using the [>] key and press the [>>] key ♦ Read out values from the display field.

Single CD

The CD player is part of the PCM2. It is used to update the navigation system.

Voice control system (VOCS)

The VOCS is designed as a module box which can be pushed into the PCM2 (optional). After the insertion, an electronic switch is opened and the module is integrated into the MOST ring.

PCM2 control unit (head unit)

The PCM2 control unit (head unit) includes the following components:

Internal:

PCM2 gateway

PCM2 Man Machine Interface (MMI)

Internal amplifier (optional, depending on the equipment)

Tuner

Single CD

Navigation (optional/insertion)

VOCS (voice control system) (optional/insertion)

Controller Area Network (CAN) Comfort

MOST switch

External:

External amplifier (optional, Harman or BOSE)

CD changer (CDC), (optional)

Telephone/telematics (optional)

The PCM2 consists of at least two but a maximum of four MOST nodes, (Gateway, MMI and Navigation and VOCS (optional)), which communicate with each other electronically via the MOST. Data is transferred outside of the PCM2 via the optical MOST.

Telephone/telematics

The telephone/telematics feature is available as an option and is linked to the PCM2 via the optical waveguide.

Tuner

The tuner is part of the PCM2 and is installed on the main board.

Unlock counter

Interruptions occur in the system if perfect communication is no longer possible. If the relevant threshold values are exceeded, an entry is recorded in the appropriate control unit and the 'unlock counter' is incremented.

External amplifier

The external amplifier (Harman or BOSE) is available as an optional feature and is linked to the PCM2 via the optical waveguide.

Internal amplifier

The optional internal amplifier (depending on equipment) is part of the PCM2 (installed on the main board).

Wake-up function

In an idle state, all control units connected to the MOST are in sleep mode. When the PCM2 is switched on, the light is switched on via the MMI. It is regenerated and passed on by the MOST control units connected.

CD changer fault overview

Fault code	Fault text	Fault effect
8001	Audio CD read error.	Failure
8002	Read speed control fault.	Failure
8003	Audio CD read error. (formatting error on audio CD).	Failure
8004	Fault in speed control unit.	Failure
8005	Mechanical fault in read unit control.	Failure
8006	Mechanical fault while inserting audio CD into magazine.	Partial failure of affected magazine position.
8007	Mechanical fault while removing audio CD from magazine.	Partial failure of affected magazine position.
8008	Mechanical fault while lifting audio CD into reader.	Failure of CD changer.
8009	Mechanical fault while removing audio CD from reader.	Failure of CD changer.
800A	Mechanical fault while ejecting magazine.	Failure of CD changer.
800B	Internal communication fault in CD changer.	Failure of CD changer.
8011	Malfunction in internal memory.	Failure of CD changer.

8001 CD changer

Audio CD read error

Diagnostic conditions

- Ignition on
- PCM2/CDR23 ON

Note!

- *The fault memory status (present/not present) is always updated when the engine is running.*
- *Fault code 8003 is recorded in the PCM2 MMI/CDR23 if the operating buttons are actuated for one or more minutes.*
- *Deactivate the 'automatic traffic announcement' before performing the diagnosis on the PCM2. If this is not done, the diagnosis will abort.*

Possible cause of fault

- Battery voltage too low '< 9 V for > 30 sec'
- Battery voltage too high ' > 16 V for > 30 sec'
- Check fuses
- Check battery

Note!

- *The MOST optical waveguide is connected to the following control units:*
- *PCM2*
- *CD changer*
- *Amplifier*
- *Telephone/telematics*

Affected pins

CD changer, plug A, pins 1 and 2

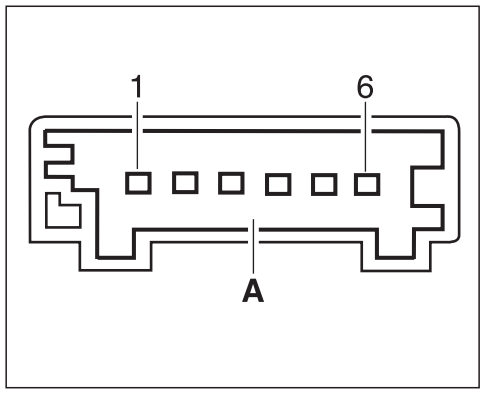

Diagnosis/troubleshooting

Work instruction			Display OK	If not OK
1	Check battery	♦ Examine battery	⇒ Step 2	Charge or replace battery → End
2	Check fuse	♦ Check fuse E6 on CD changer ♦ Check fuse D8 on radio	⇒ Step 3	Replace fuse → End
3	Check input voltage at pin 30	♦ Switch off ignition ♦ Pull off plug A on the CD changer ♦ Switch on ignition ♦ Measure voltage on plug A of the CD changer between pins 1 and 2	Battery voltage ⇒ Step 4	Corrosion in the plug connection or contact resistance in the supply lead. Check and repair wiring harness → End
4	Check ground points	♦ Measure resistance on plug A of the CD changer between pin 2 and ground	< 5 Ω ⇒ Step 5	Check or repair wiring harness → End
5	Replace the CD changer		→ End	

8002 CD changer

Read speed control fault

Diagnostic conditions

- Ignition on
- PCM2/CDR23 ON

Note!

- *The fault memory status (present/not present) is always updated when the engine is running.*
- *Fault code 8003 is recorded in the PCM2 MMI/CDR23 if the operating buttons are actuated for one or more minutes.*
- *Deactivate the 'automatic traffic announcement' before performing the diagnosis on the PCM2. If this is not done, the diagnosis will abort.*

Possible cause of fault

- CD changer faulty

Note!

- *The MOST optical waveguide is connected to the following control units:*
- *PCM2/CDR23*
- *CD changer*
- *Amplifier*
- *Telephone/telematics*

Affected pins

-

Diagnosis/troubleshooting on the PCM2/CDR23

Work instruction			Display OK	If not OK
1	Read out the PCM2/ CDR23 fault memory	♦ Connect the Porsche System Tester II No. 9588 to the diagnostic socket; switch on the ignition and the Porsche System Tester II No. 9588 ♦ Select vehicle type 911 (996) and start the automatic control unit search ♦ In the Control units menu, select 'PCM2/ CDR23' ♦ Click the [> >] key in the 'Fault memory' menu ♦ Read out fault memory ♦ Erase fault memory ♦ Remove ignition key and switch on ignition again. ♦ Read out fault memory ♦ Extract ambient data, press the [>>] key	The fault is remedied → End	⇒ Step 2
2	Replace PCM2/CDR23		The fault is remedied → End	

8003 CD changer

Audio CD read error (formatting error on CD)

Diagnostic conditions

- Ignition on
- PCM2/CDR23 ON
- Manual actuation

Note!

- *The fault memory status (present/not present) is always updated when the engine is running.*
- *Fault code 8003 is recorded in the PCM2 MMI/CDR23 if the operating buttons are actuated for one or more minutes.*
- *Deactivate the 'automatic traffic announcement' before performing the diagnosis on the PCM2. If this is not done, the diagnosis will abort.*

Possible cause of fault

- CD changer faulty

Affected pins

-

Diagnosis/troubleshooting

Work instruction			Display OK	If not OK
1	Read out the PCM2/ CDR23 fault memory	♦ Connect the Porsche System Tester II No. 9588 to the diagnostic socket; switch on the ignition and the Porsche System Tester II No. 9588 ♦ Select vehicle type 911 (996) and start the automatic control unit search ♦ In the Control units menu, select 'PCM2/CDR23' ♦ Click the [> >] key in the 'Fault memory' menu ♦ Read out fault memory ♦ Erase fault memory ♦ Remove ignition key and switch on ignition again. ♦ Read out fault memory	→ End	Fault code is displayed ⇒ Step 2
2	Replace PCM2/CDR23		→ End	

8004 CD changer

Fault in speed control unit

Diagnostic conditions

- Ignition on
- PCM2/CDR23 ON

Note!

- *Fault code 8003 is recorded in the PCM2 MMI/CDR23 if the operating buttons are actuated for 1 minute or longer.*
- *Deactivate the 'automatic traffic announcement' before performing the diagnosis on the PCM2/CDR23. If this is not done, the diagnosis will abort.*

Possible cause of fault

- CD changer faulty

Note!

- *The MOST optical waveguide is connected to the following control units:*
- *PCM2/CDR23*
- *CD changer*
- *Amplifier*
- *Telephone/telematics*

Affected pins

-

Diagnosis/troubleshooting

Work instruction			Display OK	If not OK
1	Read out the PCM2/ CDR23 fault memory	♦ Connect the Porsche System Tester II No. 9588 to the diagnostic socket; switch on the ignition and the Porsche System Tester II No. 9588 ♦ Select vehicle type 911 (996) and start the automatic control unit search ♦ In the Control units menu, select 'PCM2/CDR23' ♦ Click the [> >] key in the 'Fault memory' menu ♦ Read out fault memory ♦ Erase fault memory ♦ Remove ignition key and switch on ignition again. ♦ Read out fault memory	→ End	Fault code is displayed ⇒ Step 2
2	Replace PCM2/CDR23		→ End	

8005 CD changer

Mechanical fault in read unit control

Diagnostic conditions

- Ignition on
- PCM2/CDR23 ON

Note!

- *Fault code 8003 is recorded in the PCM2 MMI/CDR23 if the operating buttons are actuated for one or more minutes.*
- *Deactivate the 'automatic traffic announcement' before performing the diagnosis on the PCM2/CDR23. If this is not done, the diagnosis will abort.*

Possible cause of fault

- CD changer faulty

Note!

- *The MOST optical waveguide is connected to the following control units:*
- *PCM2/CDR23*
- *CD changer*
- *Amplifier*
- *Telephone/telematics*

Affected pins

-

Diagnosis/troubleshooting

Work instruction			Display OK	If not OK
1	Read out the PCM2/ CDR23 fault memory	♦ Connect the Porsche System Tester II No. 9588 to the diagnostic socket; switch on the ignition and the Porsche System Tester II No. 9588 ♦ Select vehicle type 911 (996) and start the automatic control unit search ♦ In the Control units menu, select 'PCM2/CDR23' ♦ Click the [> >] key in the 'Fault memory' menu ♦ Read out fault memory ♦ Erase fault memory ♦ Remove ignition key and switch on ignition again. ♦ Read out fault memory	→ End	Fault code is displayed ⇒ Step 2
2	Replace PCM2/CDR23		→ End	

8006 CD changer

Mechanical fault while inserting CD into magazine

Diagnostic conditions

- Ignition on
- PCM2/CDR23 ON

Possible cause of fault

- CD changer faulty

Affected pins

-

Diagnosis/troubleshooting

Work instruction			Display OK	If not OK
1	Read out CD changer fault memory	♦ Connect the Porsche System Tester II No. 9588 to the diagnostic socket; switch on the ignition and the Porsche System Tester II No. 9588 ♦ Select vehicle type 911 (996) and start the automatic control unit search ♦ In the Control units menu, select 'CD changer' ♦ Click the [> >] key in the 'Fault memory' menu ♦ Read out fault memory ♦ Erase fault memory ♦ Remove ignition key and switch on ignition again. ♦ Read out fault memory	→ End	Fault code is displayed ⇒ Step 2
2	Replace the CD changer		→ End	

8007 CD changer

Mechanical fault while removing CD from magazine

Diagnostic conditions

- Ignition on
- PCM2/CDR23 ON

Note!

- *The fault memory status (present/not present) is always updated when the engine is running.*
- *Fault code 8003 is recorded in the PCM2 MMI/CDR23 if the operating buttons are actuated for 1 minute or longer.*
- *Deactivate the 'automatic traffic announcement' before performing the diagnosis on the PCM2/CDR23. If this is not done, the diagnosis will abort.*

Possible cause of fault

- CD changer faulty

Note!

- *The MOST optical waveguide is connected to the following control units:*
- *PCM2/CDR23*
- *CD changer*
- *Amplifier*
- *Telephone/telematics*

Affected pins

-

Diagnosis/troubleshooting

Work instruction			Display OK	If not OK
1	Read out the PCM2/ CDR23 fault memory	♦ Connect the Porsche System Tester II No. 9588 to the diagnostic socket; switch on the ignition and the Porsche System Tester II No. 9588 ♦ Select vehicle type 911 (996) and start the automatic control unit search ♦ In the Control units menu, select 'PCM2/CDR23' ♦ Click the [> >] key in the 'Fault memory' menu ♦ Read out fault memory ♦ Erase fault memory ♦ Remove ignition key and switch on ignition again. ♦ Read out fault memory	→ End	Fault code is displayed ⇒ Step 2
2	Replace PCM2/CDR23		→ End	

8008 CD changer

Mechanical fault while lifting audio CD into reader

Diagnostic conditions

- Ignition on
- PCM2/CDR23 ON

Note!

- *Fault code 8003 is recorded in the PCM2 MMI/CDR23 if the operating buttons are actuated for 1 minute or longer.*
- *Deactivate the 'automatic traffic announcement' before performing the diagnosis on the PCM2/CDR23. If this is not done, the diagnosis will abort.*

Possible cause of fault

- CD changer faulty

Note!

- *The MOST optical waveguide is connected to the following control units:*
- *PCM2/CDR23*
- *CD changer*
- *Amplifier*
- *Telephone/telematics*

Affected terminals

-

Diagnosis/troubleshooting

Work instruction			Display OK	If not OK
1	Read out the PCM2/ CDR23 fault memory	♦ Connect the Porsche System Tester II No. 9588 to the diagnostic socket; switch on the ignition and the Porsche System Tester II No. 9588 ♦ Select vehicle type 911 (996) and start the automatic control unit search ♦ In the Control units menu, select 'PCM2/CDR23' ♦ Click the [> >] key in the 'Fault memory' menu ♦ Read out fault memory ♦ Erase fault memory ♦ Remove ignition key and switch on ignition again. ♦ Read out fault memory	→ End	Fault code is displayed ⇒ Step 2
2	Replace PCM2/CDR23		→ End	

8009 CD changer

Mechanical fault while removing audio CD from reader

Diagnostic conditions

- Ignition on
- PCM2/CDR23 ON
- Functional audio CD inserted correctly in CD changer
- Start CD changer

Note!

- *Fault code 8003 is recorded in the PCM2 MMI/CDR23 if the operating buttons are actuated for 1 minute or longer.*
- *Deactivate the 'automatic traffic announcement' before performing the diagnosis on the PCM2/CDR23. If this is not done, the diagnosis will abort.*

Possible cause of fault

- CD changer faulty

Note!

- *The MOST optical waveguide is connected to the following control units:*
- *PCM2/CDR23*
- *CD changer*
- *Amplifier*
- *Telephone/telematics*

Affected terminals

-

Diagnosis/troubleshooting

Work instruction			Display OK	If not OK
1	Read out CD changer fault memory	♦ Connect and start the Porsche System Tester II No. 9588 and switch on the ignition. ♦ Select '911 Turbo (996)' in the Vehicle type menu and confirm with the [>>] key. ♦ Select 'PCM' in the Control units menu and confirm with the [>>] key. ♦ Select 'CD changer' in the 911 Turbo (996) PCM2 function selection and confirm with the [>>] key. ♦ Select 'Fault memory' in the 911 Turbo (996) CD changer function selection and confirm with the [>>] key. ♦ Read out fault memory ♦ Erase fault memory ♦ Remove ignition key and switch on ignition again. ♦ Read out fault memory	→ End	Fault code is displayed ⇒ Step 2
2	Replace PCM2/CDR23		→ End	

800A CD changer

Mechanical fault while ejecting magazine

Diagnostic conditions

- Ignition on
- PCM2/CDR23 ON
- Functional audio CD inserted correctly in CD changer
- Start CD changer
- Magazine damaged
- Magazine deformed

Note!

- *Fault code 8003 is recorded in the PCM2 MMI/CDR23 if the operating buttons are actuated for 1 minute or longer.*
- *Deactivate the 'automatic traffic announcement' before performing the diagnosis on the PCM2/CDR23. If this is not done, the diagnosis will abort.*

Possible cause of fault

- Magazine damaged or deformed
- CD changer faulty

Note!

- *The MOST optical waveguide is connected to the following control units:*
- *PCM2/CDR23*
- *CD changer*
- *Amplifier*
- *Telephone/telematics*

Affected terminals

-

Diagnosis/troubleshooting

Work instruction			Display OK	If not OK
1	Read out CD changer fault memory	♦ Connect and start the Porsche System Tester II No. 9588 and switch on the ignition ♦ Select '911 Turbo (996)' in the Vehicle type menu and confirm with the [>>] key. ♦ Select 'PCM' in the Control units menu and confirm with the [>>] key. ♦ Select 'CD changer' in the 911 Turbo (996) PCM2 function selection and confirm with the [>>] key. ♦ Select 'Fault memory' in the 911 Turbo (996) CD changer function selection and confirm with the [>>] key. ♦ Read out fault memory ♦ Erase fault memory ♦ Remove ignition key and switch on ignition again. ♦ Read out fault memory	→ End	Fault code is displayed ⇒ Step 2
2	Replace PCM2/CDR23		→ End	

800B CD changer

Internal communication fault in CD changer

Diagnostic conditions

- Ignition on
- PCM2/CDR23 ON
- Functional audio CD inserted correctly in CD changer
- Start CD changer

Note!

- *Fault code 8003 is recorded in the PCM2 MMI/CDR23 if the operating buttons are actuated for 1 minute or longer.*
- *Deactivate the 'automatic traffic announcement' before performing the diagnosis on the PCM2/CDR23. If this is not done, the diagnosis will abort.*

Possible cause of fault

- CD changer faulty

Note!

- *The MOST optical waveguide is connected to the following control units:*
- *PCM2/CDR23*
- *CD changer*
- *Amplifier*
- *Telephone/telematics*

Affected terminals

-

Diagnosis/troubleshooting

Work instruction			Display OK	If not OK
1	Read out CD changer fault memory	♦ Connect and start the Porsche System Tester II No. 9588 and switch on the ignition. ♦ Select '911 Turbo (996)' in the Vehicle type menu and confirm with the [>>] key. ♦ Select 'PCM' in the Control units menu and confirm with the [>>] key. ♦ Select 'CD changer' in the 911 Turbo (996) PCM2 function selection and confirm with the [>>] key. ♦ Select 'Fault memory' in the 911 Turbo (996) CD changer function selection and confirm with the [>>] key. ♦ Read out fault memory. ♦ Clear fault memory. ♦ Remove ignition key and switch on ignition again ♦ Read out fault memory.	→ End	Fault code is displayed ⇒ Step 2
2	Replace PCM2/CDR23		→ End	

8011 CD changer

Malfunction in internal memory

Diagnostic conditions

- Ignition on
- PCM2/CDR23 ON
- Functional audio CD inserted correctly in CD changer
- Start CD changer

Note!

- *Fault code 8003 is recorded in the PCM2 MMI/CDR23 if the operating buttons are actuated for 1 minute or longer.*
- *Deactivate the 'automatic traffic announcement' before performing the diagnosis on the PCM2/CDR23. If this is not done, the diagnosis will abort.*

Possible cause of fault

- CD changer faulty
- Memory problem in MOST control module

Note!

- *The MOST optical waveguide is connected to the following control units:*
- *PCM2/CDR23*
- *CD changer*
- *Amplifier*
- *Telephone/telematics*

Affected terminals

-

Diagnosis/troubleshooting

Work instruction			Display OK	If not OK
1	Read out CD changer fault memory	♦ Connect and start the Porsche System Tester II No. 9588 and switch on the ignition. ♦ Select '911 Turbo (996)' in the Vehicle type menu and confirm with the [>>] key. ♦ Select 'PCM' in the Control units menu and confirm with the [>>] key. ♦ Select 'CD changer' in the 911 Turbo (996) PCM2 function selection and confirm with the [>>] key. ♦ Select 'Fault memory' in the 911 Turbo (996) CD changer function selection and confirm with the [>>] key. ♦ Read out fault memory ♦ Erase fault memory ♦ Remove ignition key and switch on ignition again. ♦ Read out fault memory	→ End	Fault code is displayed ⇒ Step 2
2	Replace PCM2/CDR23		→ End	

Headlight beam adjustment HBA 01

Introduction

The manual contains the diagnosis for the following system:

HBA 01 (headlight beam adjustment)

General instructions / safety instructions

The following points must be observed during vehicle diagnosis:

- After the battery is connected, volatile memories must be reprogrammed. In the case of radio coding and tuning, the customer must be informed of decoding and the deleted tuner memory.
- The coding, calibration and headlight adjustment must be observed after a HBA control module or an angle sensor for HBA has been replaced, or the running gear has been modified.
- After troubleshooting or repairs, erase the fault memory with the Porsche System Tester 2 and carry out a test drive.
- After the test drive, read out the fault memory with Porsche System Tester 2 again.

Caution!

Danger of damage due to improper handling of the battery and the control module connectors!

- ***Never disconnect battery with engine running.***
- ***Never start engine without securely connected battery.***
- ***Never pull off or push on plug connections of the control modules or other electronic components when the ignition is switched on.***

General information on the fault memory

Fault code setting conditions

Fault codes can be set in several circumstances, e.g.:

- Power failure
- Plug connections disconnected

In these circumstances, no fault is present in the system and the fault memory must be erased.

Fault memory Info key F8

In order to be able to assess the fault exactly, the fault memory Info key F8 must be pressed. This information should be saved using the Save key F4 and printed out. If a fault code is stored with "not present" status and no other problems are present, then the fault memory must be erased.

Open circuit - short to ground / voltage short / version; vehicle parameters / counter

Open circuit or short to ground:	There is (present) or was (not present) a short-circuit to ground or an open circuit in the circuit to the control module terminal.
Voltage short:	There is (present) or was (not present) a short circuit to voltage.
Version / vehicle parameters:	Incorrect vehicle coding or coding not yet carried out.
Counter:	When a fault first occurs, a fault entry is made in the fault memory and the counter is simultaneously set to 50. If a fault is present, the counter is incremented by 1 each time the ignition is switched on. The maximum count is 100. The counter is decremented if the fault is no longer present. The fault memory is erased automatically when the counter reaches 0.

Tools

The following testers are required for vehicle diagnosis:

Porsche System Tester 2 (PST 2)

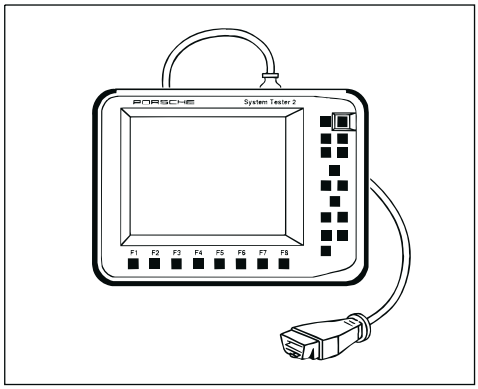

Commercially available digital multimeter

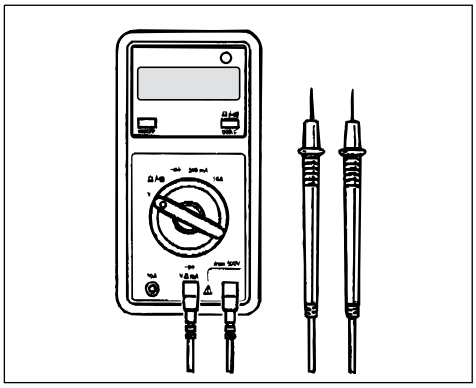

Component arrangement

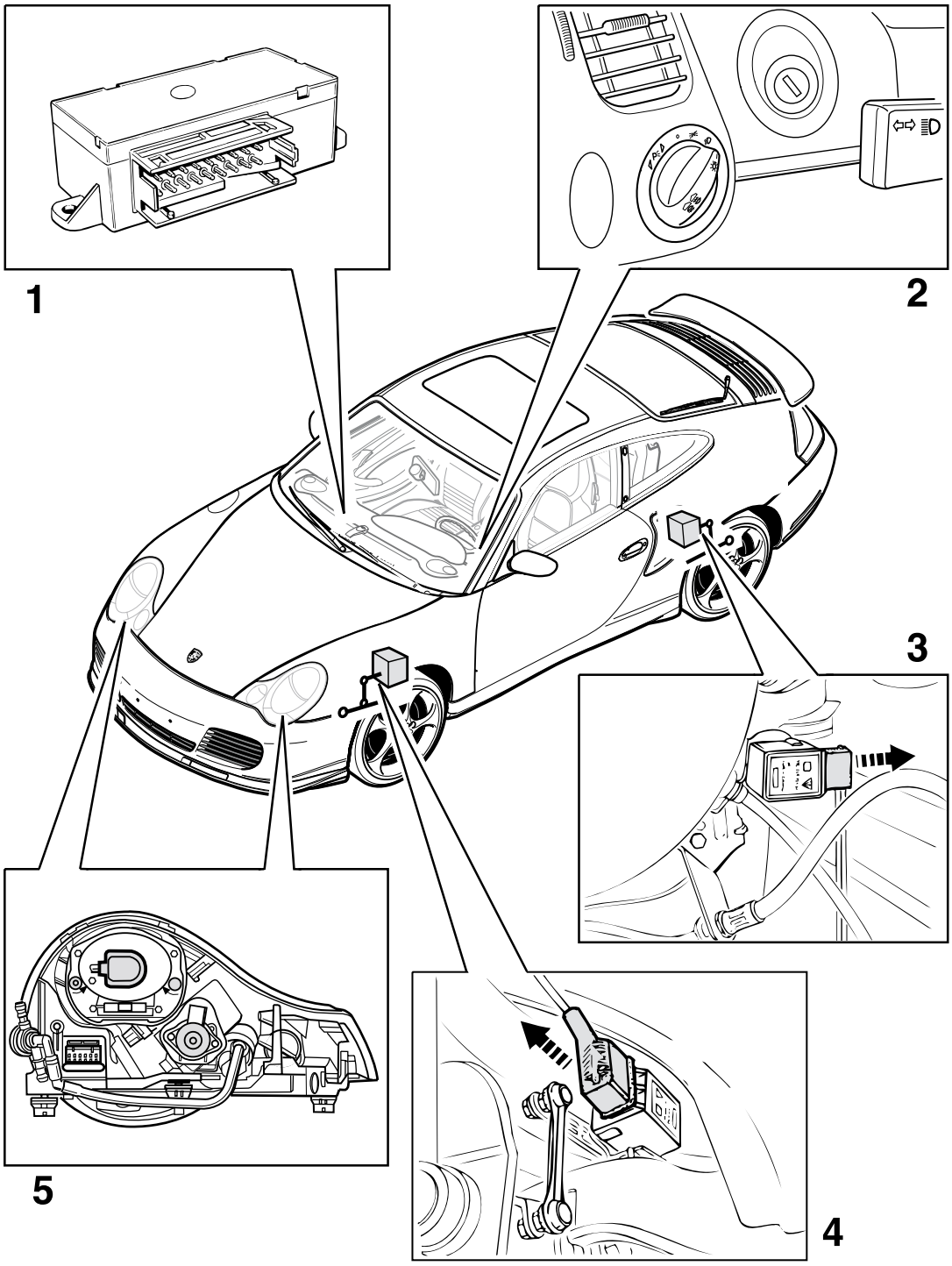

1 - Control module

2 - Main light switch

3 - Angle sensor for HBA, rear

4 - Angle sensor for HBA, front

5 - Headlights

Connector assignment

Connector assignment for HBA control module

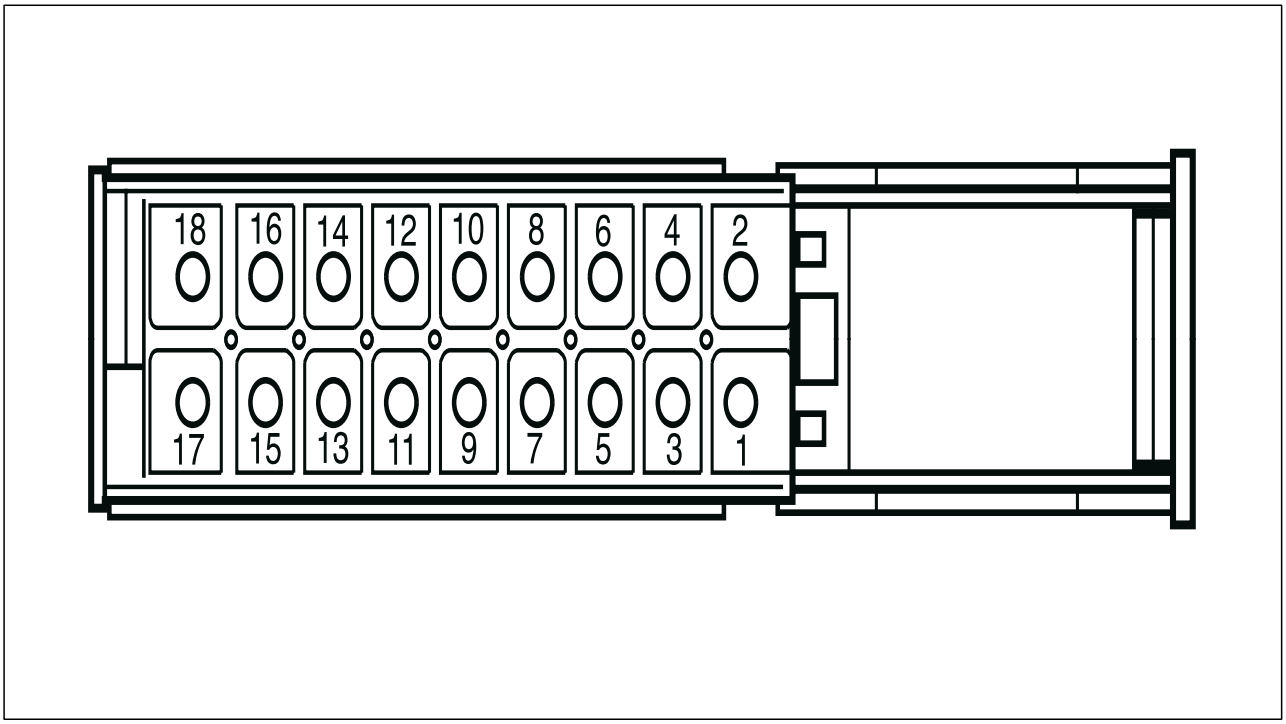

Pin	Designation	Pin	Designation
1	Stepper motor, left	10	Terminal 58 (parking light)
2	Stepper motor, left	11	Wheel speed signal
3	Stepper motor, left	12	Angle sensor for HBA (signal wire), front
4	Stepper motor, left	13	Angle sensor for HBA (signal wire), rear
5	Stepper motor, right	14	+5 V supply for angle sensors
6	Stepper motor, right	16	Terminal 15 (ignition)
7	Stepper motor, right	17	Ground for angle sensors
8	Stepper motor, right		
9	Diagnosis	18	Terminal 31 (ground for control module)

Control module function

Coding

A new control module can be coded in menu item Coding.

Procedure

1. Connect PST2 and switch on the ignition
2. Select vehicle type 911 (996) and start the automatic control module search
3. Select control module HBA
4. Select menu item Coding
5. Select vehicle type 911 (996) and start coding with the F8 key

Calibration

The control module can be calibrated under menu item Calibration. Calibration is necessary in the following cases:

- When replacing the servomotors for HBA
- When replacing the entire headlights
- When replacing the control module
- When replacing angle sensors for HBA
- When modifying the running gear

Note!

Adjust the headlights after calibration.

Procedure

1. Connect PST 2 and switch on ignition
2. Select vehicle type 911 (996) and start the automatic control module search
3. Select control module HBA
4. Select menu item Calibration and follow the instructions displayed by the PST2

Note!

The servomotors will be activated in the three possible positions – max. position, centre position and min. position – during calibration. Observe this process with the dipped beam switched on. Read out the fault memory after calibration.

Fault overview

Fault code	Fault text	Fault effect
1	Engine path, left	No automatic adjustment possible
2	Engine path, right	No automatic adjustment possible
3	Axle position sensor, front (angle sensor for HBA)	No automatic adjustment possible Headlights in safety position
4	Axle position sensor, rear (angle sensor for HBA)	No automatic adjustment possible Headlights in safety position
5	5 V supply voltage for axle position sensors (angle sensors for HBA)	No automatic adjustment possible Headlights in safety position
6	Control unit coding error	No automatic adjustment possible
7	Calibration not performed yet	No automatic adjustment possible

Fault code 1

Engine path, left

Diagnostic conditions

- Ignition on
- Terminal 58 on

Possible cause of fault

- Short circuit to ground or open circuit in the circuit between control module and servomotor for HBA, left
- Servomotor for HBA, right, is faulty
- The control module is faulty

Affected terminals

Terminals 1, 2, 3 and 4

Note!

The ignition must be switched off and switched on again in order to update the fault memory

Diagnosis/Troubleshooting

Work instruction			Display OK	If not OK
1	Check for short to ground in the supply lead to the servomotor for HBA, left	♦ Switch off ignition ♦ Pull plug off the control module ♦ Pull plug off the headlight (remove headlight) ♦ Measure resistance between the plug on the headlight pin 7 and ground ♦ Measure resistance between the plug on the headlight pin 8 and ground ♦ Measure resistance between the plug on the headlight pin 9 and ground ♦ Measure resistance between the plug on the headlight pin 10 and ground	∞ Ω Continue with 2	Repair wiring harness End
2	Check for open circuit in the supply lead to the servomotor for HBA, left	♦ Measure resistance between the plug on the control module pin 1 and the plug on the headlight pin 9 ♦ Measure resistance between the plug on the control module pin 2 and the plug on the headlight pin 10 ♦ Measure resistance between the plug on the control module pin 3 and the plug on the headlight pin 7 ♦ Measure resistance between the plug on the control module pin 4 and the plug on the headlight pin 8	< 5 Ω Continue with 3	Repair wiring harness End
3	♦ If no fault is detected in the wires, replace the servomotor for HBA, left.		End	

Fault code 2

Engine path, right

Diagnostic conditions

- Ignition on
- Terminal 58 on

Possible cause of fault

- Short circuit to ground or open circuit in the circuit between control module and servomotor for HBA, right
- Servomotor for HBA, right, is faulty
- The control module is faulty

Affected terminals

Terminals 5, 6, 7 and 8

Note!

The ignition must be switched off and switched on again in order to update the fault memory

Diagnosis/Troubleshooting

Work instruction			Display OK	If not OK
1	Check for short to ground in the supply lead to the servomotor for HBA, right	♦ Switch off ignition ♦ Pull plug off the control module ♦ Pull plug off the headlight (remove headlight) ♦ Measure resistance between the plug on the headlight pin 7 and ground ♦ Measure resistance between the plug on the headlight pin 8 and ground ♦ Measure resistance between the plug on the headlight pin 9 and ground ♦ Measure resistance between the plug on the headlight pin 10 and ground	∞ Ω Continue with 2	Repair wiring harness End
2	Check for open circuit in the supply lead to the servomotor for HBA, right	♦ Measure resistance between the plug on the control module pin 7 and the plug on the headlight pin 7 ♦ Measure resistance between the plug on the control module pin 8 and the plug on the headlight pin 8 ♦ Measure resistance between the plug on the control module pin 5 and the plug on the headlight pin 9 ♦ Measure resistance between the plug on the control module pin 6 and the plug on the headlight pin 10	< 5 Ω Continue with 3	Repair wiring harness End
3	♦ If no fault is detected in the wires, replace the servomotor for HBA, right.			

Fault code 3

Axle position sensor, front (angle sensor for HBA)

Diagnostic conditions

- Ignition on
- Terminal 58 on

Possible cause of fault

- Short circuit to voltage/ground or open circuit in the supply leads between the control module and angle sensor for HBA, front
- The sensor linkage is disengaged or faulty
- Angle sensor for HBA, front, is faulty
- The control module is faulty

Affected terminals

Terminals 12, 14 and 17

Diagnosis/Troubleshooting

Work instruction			Display OK	If not OK
1	Visual inspection	♦ Visual inspection of the sensor linkage ♦ Visual inspection of the plastic holder for the sensor	Continue with 2	Repair linkage and/ or plastic holder End
2	Check 5 V supply voltage of the sensor	♦ Switch off ignition ♦ Pull plug off the angle sensor for HBA, front ♦ Switch ignition on ♦ Measure voltage between pin 5 of the sensor plug and ground	approx. 5 V Continue with 3	Continue with 5
3	Check ground lead of the sensor	♦ Measure voltage between pin 5 and pin 1 of the sensor plug	approx. 5 V Continue with 4	Continue with 8
4	Check signal wire of the sensor	♦ In the PST2 menu item Actual values, select Sensor voltage, spring travel 1 (front) ♦ Connect a jumper to pins 4 and 5 of the sensor plug	approx. 5 V Continue with 12	Continue with 9

Work instruction			Display OK	If not OK
5	Check 5 V supply lead for short to ground	♦ Switch off ignition ♦ Pull plug off the control module for HBA ♦ Measure resistance between the plug on the control module for HBA pin 14 and ground	∞ Ω Continue with 6	Repair wiring harness End
6	Check 5 V supply lead for short to B+	♦ Switch ignition on ♦ Measure voltage between the plug on the control module for HBA pin 14 and ground	0 V Continue with 7	Repair wiring harness End
7	Check 5 V supply lead for open circuit	♦ Switch off ignition ♦ Measure resistance between the plug on the control module for HBA pin 14 and the plug on the angle sensor for HBA, front, pin 5	< 5 Ω Continue with 13	Repair wiring harness End
8	Check ground lead of the sensor for open circuit	♦ Measure resistance between the plug on the control module for HBA pin 17 and the plug on the angle sensor for HBA pin 1	< 5 Ω Continue with 13	Repair wiring harness End
9	Check signal wire of the sensor for short to ground	♦ Pull plug off the control module for HBA ♦ Measure resistance between the plug on the control module for HBA pin 12 and ground ♦ Measure resistance between the plug on the control module for HBA pin 12 and pin 17	∞ Ω Continue with 10	Repair wiring harness End
10	Check signal wire of the sensor for short to B+	♦ Switch ignition on ♦ Measure voltage between the plug on the control module for HBA pin 12 and ground	0 V Continue with 11	Repair wiring harness End
11	Check signal wire of the sensor for open circuit	♦ Switch off ignition ♦ Measure resistance between the plug on the control module for HBA pin 12 and the plug on the angle sensor for HBA, front, pin 5	< 5 Ω Continue with 13	Repair wiring harness End
12	♦ Replace angle sensor for HBA, front			
13	♦ Replace control module for HBA			

Fault code 4

Axle position sensor, rear (angle sensor for HBA)

Diagnostic conditions

- Ignition on
- Terminal 58 on

Possible cause of fault

- Short circuit to voltage/ground or open circuit in the supply leads between the control module and angle sensor for HBA, rear
- The sensor linkage is disengaged or faulty
- Angle sensor for HBA, rear, is faulty
- The control module is faulty

Affected terminals

Terminals 13, 14 and 17

Diagnosis/Troubleshooting

Work instruction			Display OK	If not OK
1	Visual inspection	♦ Visual inspection of the sensor linkage ♦ Visual inspection of the plastic holder for the sensor	Continue with 2	Repair linkage and/ or plastic holder End
2	Check 5 V supply voltage of the sensor	♦ Switch off ignition ♦ Pull plug off the angle sensor for HBA, rear ♦ Switch ignition on ♦ Measure voltage between pin 5 of the sensor plug and ground	approx. 5 V Continue with 3	Continue with 5
3	Check ground lead of the sensor	♦ Measure voltage between pin 5 and pin 1 of the sensor plug	approx. 5 V Continue with 4	Continue with 8
4	Check signal wire of the sensor	♦ In the PST2 menu item Actual values, select Sensor voltage, spring travel 1 (rear) ♦ Connect a jumper to pins 4 and 5 of the sensor plug	approx. 5 V Continue with 12	Continue with 9

Work instruction			Display OK	If not OK
5	Check 5 V supply lead for short to ground	♦ Switch off ignition ♦ Pull plug off the control module for HBA ♦ Measure resistance between the plug on the control module for HBA pin 14 and ground	∞ Ω Continue with 6	Repair wiring harness End
6	Check 5 V supply lead for short to B+	♦ Switch ignition on ♦ Measure voltage between the plug on the control module for HBA pin 14 and ground	0 V Continue with 7	Repair wiring harness End
7	Check 5 V supply lead for open circuit	♦ Switch off ignition ♦ Measure resistance between the plug on the control module for HBA pin 14 and the plug on the angle sensor for HBA, rear, pin 5	< 5 Ω Continue with 13	Repair wiring harness End
8	Check ground lead of the sensor for open circuit	♦ Measure resistance between the plug on the control module for HBA pin 17 and the plug on the angle sensor for HBA pin 1	< 5 Ω Continue with 13	Repair wiring harness End
9	Check signal wire of the sensor for short to ground	♦ Pull plug off the control module for HBA ♦ Measure resistance between the plug on the control module for HBA pin 13 and ground ♦ Measure resistance between the plug on the control module for HBA pin 13 and pin 17	∞ Ω Continue with 10	Repair wiring harness End
10	Check signal wire of the sensor for short to B+	♦ Switch ignition on ♦ Measure voltage at the plug on the control module for HBA pin 13 and ground	0 V Continue with 11	Repair wiring harness End
11	Check signal wire of the sensor for open circuit	♦ Switch off ignition ♦ Measure resistance between the plug on the control module for HBA pin 13 and the plug on the angle sensor for HBA, rear, pin 5	< 5 Ω Continue with 13	Repair wiring harness End
12	♦ Replace angle sensor for HBA, rear			
13	♦ Replace control module for HBA			

Fault code 5

5 V supply for axle position sensors (angle sensors for HBA)

Diagnostic conditions

- Ignition on
- Terminal 58 on

Possible cause of fault

- Short circuit to voltage/ground in the supply leads between the control module and angle sensors for HBA
- Angle sensor for HBA is faulty
- The control module is faulty

Note!

The 5 V supply voltage for the sensors is ensured via pin 14 on the HBA control module. A fault in this supply lead affects both angle sensors. Moisture in the angle sensors plug can lead to a fault entry.

Affected terminals

Terminals 14 and 17

Diagnosis/Troubleshooting

Work instruction			Display OK	If not OK
1	Check angle sensor plug for HBA, front	♦ Switch off ignition ♦ Pull plug off the angle sensor for HBA, front ♦ Switch ignition on ♦ Delete the fault memory and read out again. Observe whether fault code 5 reappears. If fault code 5 does not reappear, the supply lead or the angle sensor for HBA, front, is faulty.	Continue with 2	Check the angle sensor plug for HBA for moisture and corrosion, or replace angle sensor for HBA, front. End
2	Check plug on the angle sensor for HBA, rear	♦ Switch off ignition ♦ Reattach plug to the angle sensor for HBA, front ♦ Pull plug off the angle sensor for HBA, rear ♦ Switch ignition on ♦ Delete the fault memory and read out again. Observe whether fault code 5 reappears. If fault code 5 does not reappear, the plug on the angle sensor for HBA, rear, is faulty.	Continue with 3	Check the angle sensor plug for HBA for moisture and corrosion, or replace angle sensor for HBA, rear. End
3	Check 5 V supply voltage of the sensor	♦ Switch off ignition ♦ Pull plug off the angle sensor for HBA, front ♦ Switch ignition on ♦ Measure voltage between pin 5 of the sensor plug and ground	approx. 5 V Continue with 4	Continue with 5
4	Check ground lead of the sensor	♦ Measure voltage between pin 5 and pin 1 of the angle sensor for HBA, front	approx. 5 V Continue with 9	Continue with 8
5	Check 5 V supply lead for short to ground	♦ Switch off ignition ♦ Pull plug off the angle sensor for HBA, rear ♦ Pull plug off the control module for HBA ♦ Measure resistance between the plug on the control module for HBA pin 14 and ground ♦ Measure resistance between the plug on the control module for HBA pin 14 and pin 17	∞ Ω Continue with 6	Repair wiring harness End

Work instruction			Display OK	If not OK
6	Check 5 V supply lead for short to B+	♦ Switch ignition on ♦ Measure voltage between the plug on the control module for HBA pin 14 and ground	0 V Continue with 7	Repair wiring harness End
7	Check 5 V supply lead for open circuit	♦ Switch off ignition ♦ Measure resistance between the plug on the control module for HBA pin 14 and the plug on the angle sensor for HBA, front, pin 5 ♦ Measure resistance between the plug on the control module for HBA pin 14 and the plug on the angle sensor for HBA, rear, pin 5	< 5 Ω Continue with 10	Repair wiring harness End
8	Check ground lead of the sensors for open circuit	♦ Measure resistance between the plug on the control module for HBA pin 17 and the plug on the angle sensor, front, pin 1 ♦ Measure resistance between the plug on the control module for HBA pin 17 and the plug on the angle sensor, rear, pin 1	< 5 Ω Continue with 10	Repair wiring harness End
9	Replace angle sensor for HBA at front or rear.		End	
10	Replace control module		End	

Fault code 6

Control unit coding error

Diagnostic conditions

- Ignition on
- Terminal 58 on

Possible cause of fault

- Control module has not been coded yet

Affected terminals

-

Diagnosis/Troubleshooting

Work instruction		Display OK	If not OK
1	Code the control module	End	

Fault code 7

Calibration not performed yet

Diagnostic conditions

- Ignition on
- Terminal 58 on

Possible cause of fault

- Calibration has not yet been carried out for newly installed control module

Affected terminals

-

Diagnosis/Troubleshooting

Work instruction			Display OK	If not OK
1	Calibrate control module	♦ Select menu item Calibration in the Porsche System Tester 2 ♦ Observe instructions on the screen ♦ Carry out calibration	End	Continue with 2

Note!

Calibration is not possible if the sensor voltage lies outside the plausible range (sensor voltage less than 2 V or greater than 3 V).

Work instruction			Display OK	If not OK
2	Check sensor voltages	♦ Select menu item Actual Values in the Porsche System Tester 2 ♦ Vehicle on level surface (not raised)	2 - 3 V End	Continue with 3
3	Visual inspection	♦ Check sensor holder and linkage for damage	End	Replace sensor holder and linkage End

Alarm system I 48

Introduction

The manual contains the diagnosis for the following system:

Alarm system I 48

General instructions / safety instructions

The following points must be observed during vehicle diagnosis:

- After the battery is connected, volatile memories must be reprogrammed. In the case of radio coding and tuning, the customer must be informed of decoding and the deleted tuner memory.
- After troubleshooting or repairs, erase the fault memory with the Porsche System Tester 2 and carry out a test drive.
- After the test drive, read out the fault memory with Porsche System Tester 2 again.

Caution!

Danger of damage due to improper handling of the battery and the control module connectors!

- ***Never disconnect battery with engine running.***
- ***Never start engine without securely connected battery.***
- ***Never pull off or push on plug connections of the control modules or other electronic components when the ignition is switched on.***

Special tools 9616 and 9617

The two special tools 9616 and 9617 can be used for the measurements carried out on the 42-pole connector (connector A) Express reference has not been made about connecting the special tools in the troubleshooting section.

General information on the fault memory

Fault code setting conditions

Fault codes can be set in several circumstances, e.g.

- battery disconnected
- plug connections disconnected

- power failure
- etc.

In these circumstances, no fault is present in the system and the fault memory must be erased.

Fault memory Info key F8

In order to be able to assess the fault exactly, the fault memory Info key F8 must be pressed. This information should be saved using the Save key F4 and printed out. If a fault code is stored with "not present" status and no other problems are present, then the fault memory must be erased.

Open circuit - short to ground / short to B+ / version; vehicle parameters / counter

Open circuit or short to ground:	There is (present) or was (not present) a short circuit to ground or an open circuit in the circuit to the control module terminal.
Short to B+:	There is (present) or was (not present) a short circuit to voltage.

Tools

The following testers are required for vehicle diagnosis:

Porsche System Tester 2 (PST 2)

►

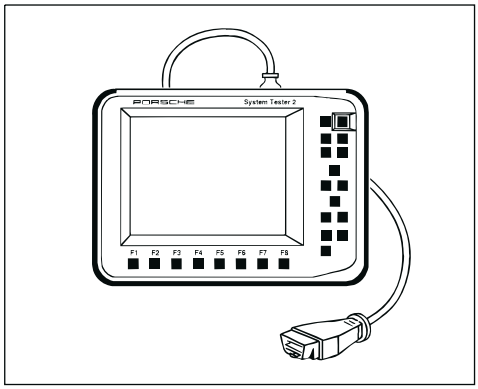

Special tool 9616

►

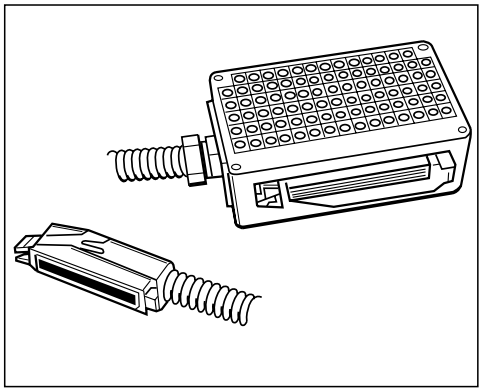

Commercially available digital multimeter

►

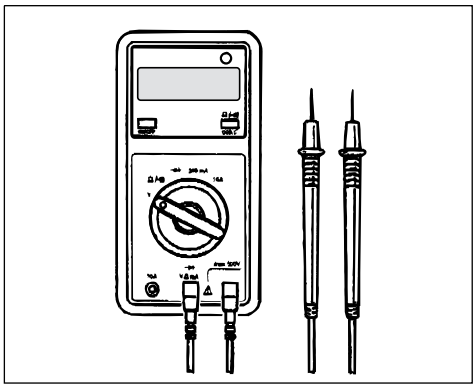

Special tool 9617

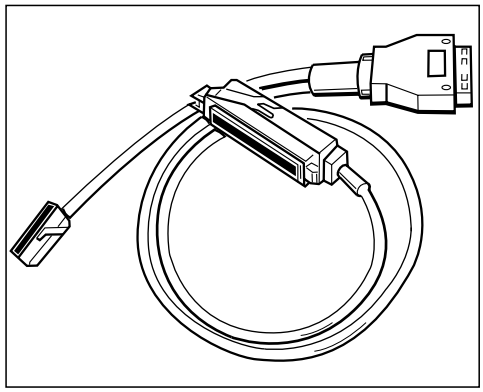

Component arrangement

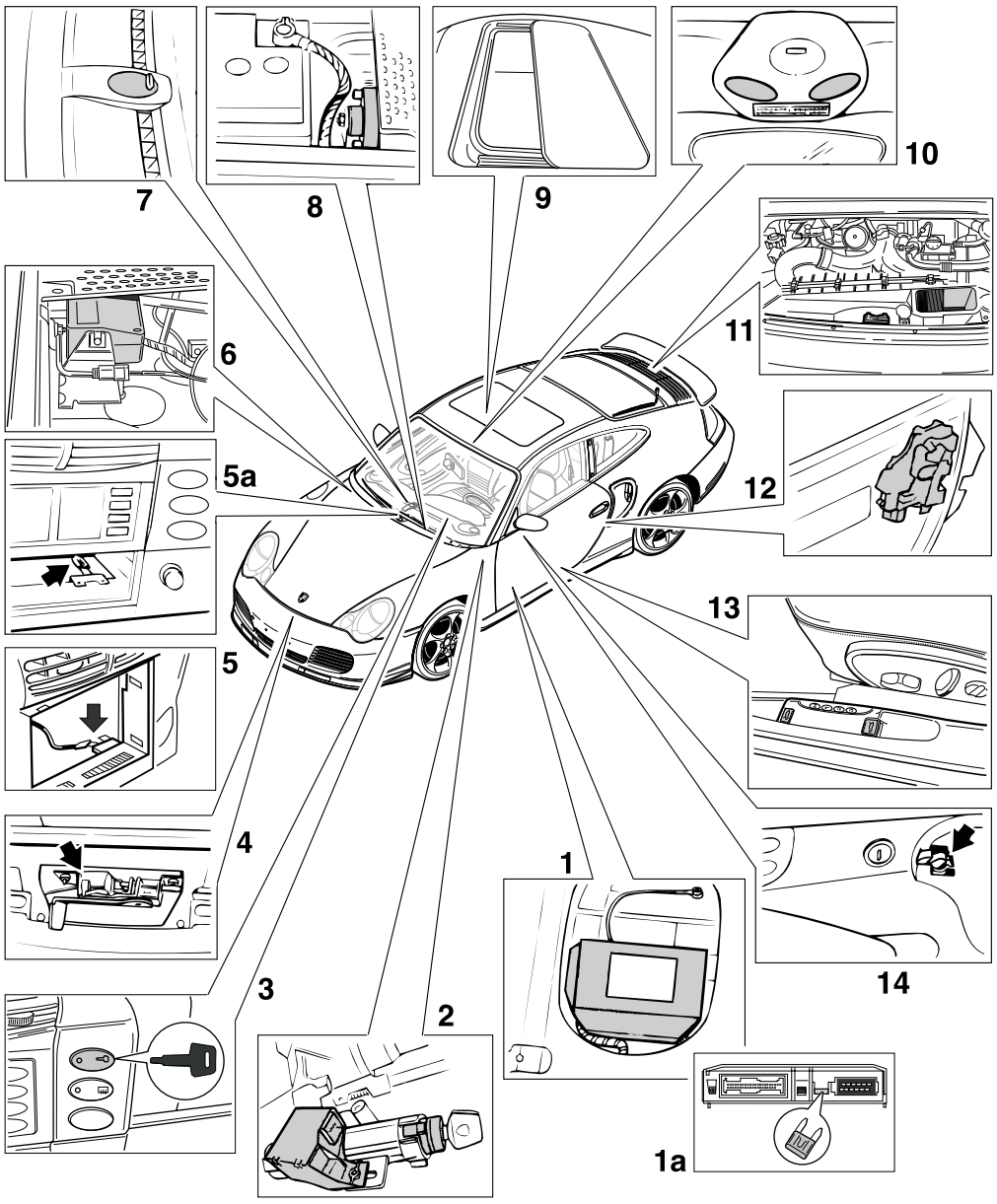

1 - Control module

- ❑ 1a - Fuse on control module (15 A)

2 - Transponder coil and signal converter

3 - Central locking button (central locking switch)

4 - Switch, front lid

5 - PCM alarm contact

- ❑ 5a Radio alarm contact

6 - Alarm siren

7 - Alarm readiness light

8 - Alarm horn

9 - Sliding roof

10 - Passenger compartment monitoring sensor

11 - Switch, rear lid

12 - Door lock module

Note!

If the positive supply for the alarm horn is interrupted, the visual alarm is triggered via the direction indicator lights and the interior lights.

13 - Release for front and rear lids

14 - Switch, oddments tray

Connector assignment

Connector assignment for alarm system control module

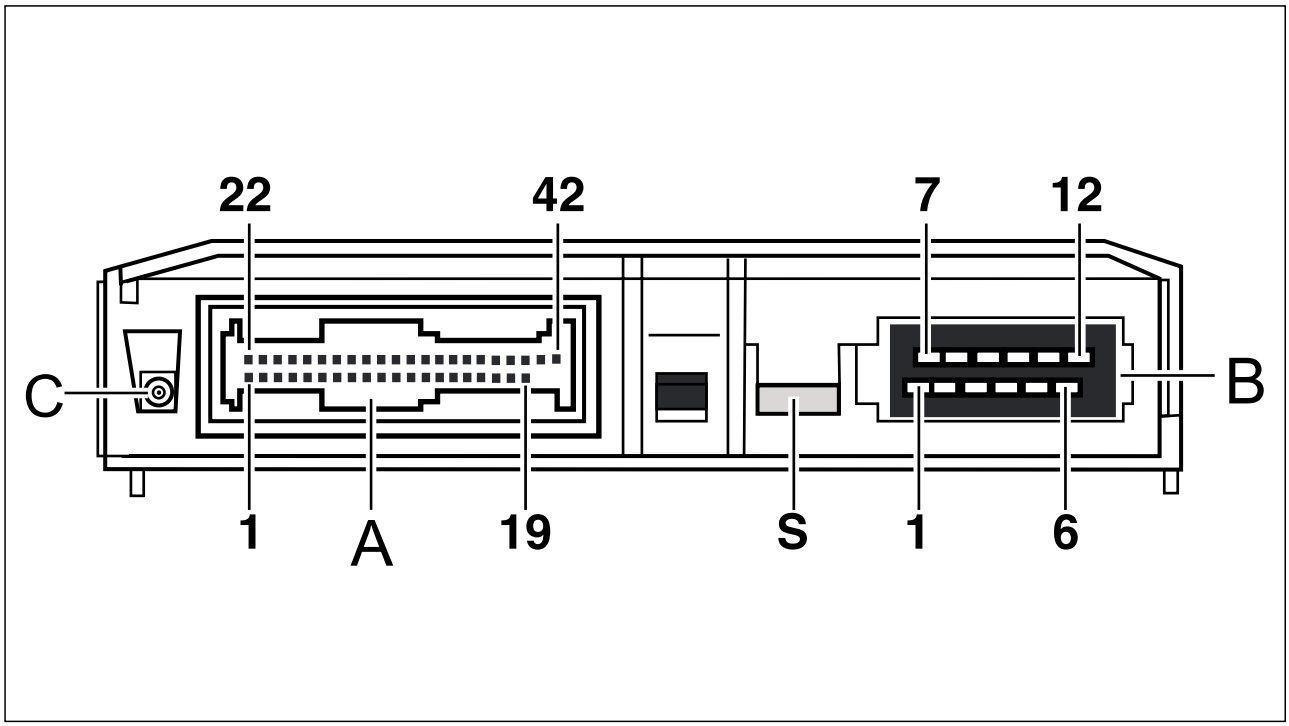

A - Connector A, 42-pin

B - Connector B, 12-pin

C - Connector C, radio antenna connection

S - 15 A fuse

Connector A, 42-pin

Pin	Designation	Pin	Designation
1	Seat memory data	22	Reserved for Targa flap
2	K-line (diagnosis)	23	Immobilizer line
3	Signal converter data	24	Passenger compartment sensor data reception
4	Signal converter control	25	Door contact, driver's side
5	Door safe - driver	26	Micro switch - oddments tray
6	Reserved for Cabriolet roof	27	Radio contact
7	Door contact, passenger	28	Door safe micro switch - passenger
8	Passenger compartment sensor data transmission	29	Switch for central locking

Connector A, 42-pin

Pin	Designation	Pin	Designation
9	Lid release button	30	Door locked micro switch - driver's side
10	"Lid open" display (instrument cluster)	31	Front lid micro switch
11	External switching contact	32	Door locked micro switch - passenger's side
12	Airbag signal input	33	Front lid servomotor
13	Rear lid micro switch	34	Rear lid servomotor
14	Speed signal	35	Micro switch - door lock barrel closed
15	Micro switch - door lock barrel open	36	Terminal 15
16	Terminal 86 S	37	Lighting - front and rear lids
17	Reserved for glove compartment	38	Control, external electronics
18	Power window control	39	Function indicator
19	Safe motor closed	40	Comfort opening
20	Not used	41	Switch for central locking - locked indication
21	Not used	42	Comfort closing

Connector B, 12-pin

Pin	Designation	Pin	Designation
1	Terminal 31	7	Terminal 30 and horn supply
2	Alarm horn	8	Terminal 30 - external loads
3	Central locking servomotor open/closed	9	Locking motor closed
4	Load disconnection	10	Servomotor - tank cap closed
5	Servomotor - tank cap open	11	Interior light
6	Direction indicator light, left	12	Direction indicator light, left

Control module function

Communication with seat memory control module

The two control modules "seat memory" and "alarm system" communicate via a signal lead. This realises adjustment of the mirror and seat positions via the hand-held transmitter. If required positions of the rearview mirrors and driver's seat are assigned to a hand-held transmitter, the rearview mirrors and driver's seat move to these positions as soon as the vehicle is unlocked with the hand-held transmitter.

The PST2 can be used to test the communication line between the two control modules for an open circuit. Procedure:

1. Connect PST2 and switch on ignition.
2. Select "Seat memory" control module
3. Select "Alarm system interface level" in the menu item "Input signals"
4. Press the locked/unlocked button of the hand-held transmitter

The switch position on the PST2 is closed briefly.

Activation status memory

The alarm-triggering components that are in the non-active state during alarm system activation and that are therefore blocked for alarm triggering are stored in the activation status memory. The activation type also is saved. If the vehicle is secured, e.g. by remote control, and the oddments tray is open, this is indicated by the alarm system control memory by a brief horn signal. This status is stored in the activation status memory under "Oddments tray activation type: - by remote control-". This function can be used in troubleshooting, inasmuch as a faulty micro switch or faulty wire can be the cause for the horn signal. Reading out the activation status memory can help to track down the faulty alarm-triggering component, e.g. front lid, rear lid, oddments tray, etc.

Coding

Four functions can be selected under menu item "Coding:":

- Country coding
- Version coding
- Vehicle re-locking
- Alarm siren/tilt sensor

Country coding

The country in which the vehicle is used in as well as the vehicle design (sliding roof, convertible) can be coded using the Porsche System Tester 2.

The type of alarm output and its duration depend on the country codes.

Allocation of contry coding

Designation/country	RHD	Radio frequency/MHz	Country allocation
Federal Republic of Germany		433	D (with or without sliding roof, depending on equipment version)
USA		315	USA (with or without sliding roof, depending on equipment version)
France		433	D (with or without sliding roof, depending on equipment version)
Guadeloupe		433	D (with or without sliding roof, depending on equipment version)
Reunion		433	D (with or without sliding roof, depending on equipment version)
Italy		433	D (with or without sliding roof, depending on equipment version)
Sweden		433	D (with or without sliding roof, depending on equipment version)
Switzerland		433	CH (with or without sliding roof, depending on equipment version)
Austria		433	D (with or without sliding roof, depending on equipment version)
Denmark		433	D (with or without sliding roof, depending on equipment version)
Finland		433	D (with or without sliding roof, depending on equipment version)
Taiwan		433	D (with or without sliding roof, depending on equipment version)

Designation/country	RHD	Radio frequency/MHz	Country allocation
Hong Kong	X	315	D (with or without sliding roof, depending on equipment version)
Great Britain	X	433	GB*) (with or without sliding roof, depending on equipment version)
Japan	X	315	D (with or without sliding roof, depending on equipment version)
Luxembourg		433	D (with or without sliding roof, depending on equipment version)
Netherlands		433	GB*) (with or without sliding roof, depending on equipment version)
Norway		433	D (with or without sliding roof, depending on equipment version)
Belgium		433	B*) (with or without sliding roof, depending on equipment version)
Australia	X	315	AUS (with or without sliding roof, depending on equipment version)
New Zealand	X	433	AUS (with or without sliding roof, depending on equipment version)
Thailand	X	433	D (with or without sliding roof, depending on equipment version)
Singapore	X	433	D (with or without sliding roof, depending on equipment version)
Brunei	X	433	D (with or without sliding roof, depending on equipment version)
South Africa	X	433	D (with or without sliding roof, depending on equipment version)
Spain		433	D (with or without sliding roof, depending on equipment version)
Portugal		433	D (with or without sliding roof, depending on equipment version)

Designation/country	RHD	Radio frequency/MHz	Country allocation
Greece		433	D (with or without sliding roof, depending on equipment version)
Abu Dhabi		433	D (with or without sliding roof, depending on equipment version)
Bahrain		433	D (with or without sliding roof, depending on equipment version)
Dubai		433	D (with or without sliding roof, depending on equipment version)
Kuwait		433	D (with or without sliding roof, depending on equipment version)
Oman		433	D (with or without sliding roof, depending on equipment version)
Qatar		433	D (with or without sliding roof, depending on equipment version)
Saudi Arabia		433	D (with or without sliding roof, depending on equipment version)
Jordan		433	D (with or without sliding roof, depending on equipment version)
Lebanon		433	D (with or without sliding roof, depending on equipment version)
Syria		433	D (with or without sliding roof, depending on equipment version)
China		433	D (with or without sliding roof, depending on equipment version)
Mexico		315	USA (with or without sliding roof, depending on equipment version)
Argentina		433	D (with or without sliding roof, depending on equipment version)
Chile		433	D (with or without sliding roof, depending on equipment version)

Designation/country	RHD	Radio frequency/MHz	Country allocation
Curaçao		433	D (with or without sliding roof, depending on equipment version)
Guatemala		433	D (with or without sliding roof, depending on equipment version)
Columbia		433	D (with or without sliding roof, depending on equipment version)
Peru		433	D (with or without sliding roof, depending on equipment version)
Uruguay		433	D (with or without sliding roof, depending on equipment version)
Venezuela		433	D (with or without sliding roof, depending on equipment version)
Canada		315	USA (with or without sliding roof, depending on equipment version)
Brazil		433	BRA (with or without sliding roof, depending on equipment version)
Russia		433	D (with or without sliding roof, depending on equipment version)
Korea		433	D (with or without sliding roof, depending on equipment version)
Malaysia	X	433	D (with or without sliding roof, depending on equipment version)
Caribbean countries	X	433	D (with or without sliding roof, depending on equipment version)
Malta/Cyprus	X	433	GB*) (with or without sliding roof, depending on equipment version)
Baltic countries		433	D (with or without sliding roof, depending on equipment version)
Israel		433	D (with or without sliding roof, depending on equipment version)

Designation/country	RHD	Radio frequency/MHz	Country allocation
Croatia		433	D (with or without sliding roof, depending on equipment version)
Macedonia		433	D (with or without sliding roof, depending on equipment version)
New Caledonia		433	D (with or without sliding roof, depending on equipment version)
Poland		433	D (with or without sliding roof, depending on equipment version)
Romania		433	D (with or without sliding roof, depending on equipment version)
Slovakia		433	D (with or without sliding roof, depending on equipment version)
Slovenia		433	D (with or without sliding roof, depending on equipment version)
Czech Republic		433	D (with or without sliding roof, depending on equipment version)
Hungary		433	D (with or without sliding roof, depending on equipment version)

Version coding

Four versions can be selected under menu item "Version coding".

Version 1

The doors are automatically locked as soon as the ignition is switched on.

Version 2

The doors are automatically locked if the vehicle exceeds a limit speed of 5 km/h.

Version 3

The doors are automatically locked as soon as the ignition is switched on. If the doors are opened while the engine is running,

1) Coded "D" at the factory. The control module is coded "GB" or "B" only at the place of use.

automatic re-locking takes place if the vehicle exceeds a limit speed of 5 km/h.

Version 4

The doors are not locked automatically.

Note!

Automatically locked doors can be opened by pressing the central locking button (central locking switch) or by pulling on the door handle twice.

System test

All components of the alarm system (except for terminal 15) can be checked for operation under menu item "System test". During the system test a bar runs across the screen, and if, for example, the oddments tray is opened, an alarm is triggered. This alarm output differs from the usual alarm output in that the alarm horn is activated only for a short time. The alarm output is accompanied by interior lighting and direction indicator lights.

Note!

The function of the passenger compartment monitoring sensor can be checked under menu item "Interior protection". When movement is detected in the passenger compartment, the alarm horn is activated briefly while the interior lighting and direction indicator lights go on continuously.

Interior monitor

The function of the interior monitoring sensor can be checked under menu item Interior monitor. When movement is detected in the passenger compartment, the alarm horn is activated briefly while the interior lighting and direction indicator lights go on continuously.

Learning function

Immobilizer

The immobilizer code can be entered under menu item "Learning functions/immobilizer" after the alarm control module is replaced.

Caution!

The immobilizer code cannot be deleted or changed again. An incorrect input will render the control module useless!

Input and check immobilizer code carefully.

Transponder key

A new remote control can be adapted for the vehicle under menu item "Learning functions/transponder key". The old transponders can be taught to the new control module after replacement of the alarm system control module and input of the immobilizer code. Refer to the chapters "Teaching hand-held transmitter"⇒ **96-5** page 8 and "Reading out remote controls"⇒ **96-5** page 8

Remote control

Up to four remote controls can be adapted to the control module under menu item "Learning functions/remote control". The old remote controls can be taught to the new control module after replacement of the alarm system control module and input of the immobilizer code. Refer to the chapter "Teaching hand-held transmitter".⇒ **96-5** page 8

Reading out remote controls

Under the menu item "Reading out remote controls", the data of the remote controls can be read out after the alarm system control module is replaced. If it is not possible to read out and transfer the remote controls (e.g. no communication with the control module), the old remote controls can be adapted to the new control module (teaching hand-held transmitter).

Transferring remote controls

Under the menu item "Transfer remote controls", the data read out from the remote controls can be transferred to the new control module.

Teaching hand-held transmitter

General

Up to four hand-held transmitters can be adapted to the control module. The hand-held transmitter is used to operate the central locking system and to open the luggage compartment (front lid). Furthermore, the stored seat, mirrors and lumbar support positions are set when the vehicle is unlocked with the hand-held transmitter. Also refer to the chapter "Control module function - seat memory System S 02". Another function is the immobilizer which operates by means of the integrated transponder.

Work preparation

The following information is required to teach the hand-held transmitter:

- Key learning code from IPAS
- 24-digit Code No. (see barcode label on key grip)
- If the key is stolen or the hand-held transmitter is faulty, all keys still in the customer's possession will be required.

Note!

- *During maintenance work, please bear in mind that the transmission frequency of the hand-held transmitter is different according to the country of use. The corresponding reception frequency is printed on the alarm system control module. This reception frequency is either:*
- *433 MHz with M-number M534*
- *315 MHz with M-Nummer M535; refer to the allocation table for country coding⇒* ***96-5*** *page 2*

Procedure

1. Connect the vehicle keys and the new hand-held transmitter and insert in the ignition.
2. Connect PST2 and switch on ignition.
3. Select "Alarm system" in the menu and press the double arrow key [>>].
4. Select "Learning function" in the menu and press the double arrow key [>>].
5. Select "Transponder key" in the menu and press the double arrow key [>>].
6. "Input key learning code" appears on the screen. Input the key learning code with the arrow keys [^] and [v] and press the double arrow key [>>].
7. "Please confirm input" appears on the screen. Check the input and press the [F7] key to confirm the input.
8. Distinguish between loss and fault and additional hand-held transmitter for the transponder.

8a) Teaching an additional hand-held transmitter

Select a free position (1, 2, 3 or 4) with the arrow key [v] and press the [F8] key.
Now the transponder code is saved in the selected position.
Note the position of the new transponder code.

8b) Teaching in the case of a lost or faulty hand-held transmitter:

Caution!

Risk of theft due to the lost hand-held transmitter!

- ***It is essential to delete the transponder code of the lost hand-held transmitter as described in step 8 b).***
- ***It is essential to delete the radio code of the lost hand-held transmitter as described in step 12 b).***

Note!

The adjustment function of the seat, mirror and lumbar positions via the hand-held transmitter is correct only if the radio code and the transponder code of a hand-held transmitter are each stored at the same position in the alarm system control module.

8b) Teaching in the case of a lost or faulty hand-held transmitter:

In this case, it is first necessary to identify and delete the stored transponder code of the lost or faulty hand-held transmitter. All remaining vehicle keys are required for this purpose, because all transponder codes are erased during the deletion function.
The vehicle code of the vehicle key is displayed under "Current transponder".
Press the [F3] key. "All codes will be deleted" appears on the screeen; confirm with the [F7] key.
Insert the vehicle key equipped with the new hand-held transmitter into the ignition lock and switch on the ignition. Establish communication between the PST2 and the control module. Select the position (1, 2, 3,or 4) with the arrow keys [^] and [v] and press the [F8] key. The transponder code of the first hand-held transmitter has now been taught. Remove the key and repeat the process with the remaining hand-held transmitters.

9. Press the double arrow key [<<], select menu item "Remote control" and press the double arrow key [>>].
10. "Input key learning code" appears on the screen. Input the key learning code with the arrow keys [^] and [v] and press the double arrow key [>>].

11. "Please confirm input" appears on the screen. Check the input and press the F7 key to confirm the input.
12. Distinguish between loss and fault and additional hand-held transmitter for the radio code.

12 a) Teaching an additional hand-held transmitter:

Select the same position (1 to 4) as for the transponder key and press the F8 key.

12 b) Teaching in the case of a lost or faulty hand-held transmitter:

In this case, it is first necessary to identify and delete the stored "radio code" of the lost or faulty hand-held transmitter. The remaining hand-held transmitters are required for this purpose.
Press the locking button on the hand-held transmitter and then insert the vehicle key into the ignition lock, switch on the ignition and re-establish communication with the control module.
The radio of the hand-held transmitter with which the vehicle was last unlocked is displayed under "Current radio code".
Compare this radio code with the radio codes at positions 1 to 4. This comparison allows the position of the lost hand-held transmitter (radio code) to be identified, as one radio code is ultimately left over at positions 1 to 4.
Insert the vehicle key equipped with the new hand-held transmitter into the ignition lock and switch on the ignition. Establish communication with the control module. Select the identified position with the arrow keys ∧ and ∨ and delete the radio code with the F3 key. Then press the F8 key.

13. Carefully input the 24-digit code number with the arrow keys ∧ and ∨ press the double arrow key >>.
14. "Please confirm input" appears on the screen. Check the input and press the F7 key.
15. Now the handheld transmitter is taught. Go back to the menu item "Learning function", remove the key and switch on the ignition again. Once the key has been removed again, the hand-held transmitter is ready for use. Check handheld transmitter for operation.

Reading out and transferring remote control

General

When replacing the alarm system control module, it is possible to read out remote controls from the old control module and transfer

them to the new control module. In this way, the hand-held transmitters (remote controls and transponders) can be retained. In other words, it is not necessary to change the hand-held transmitter when replacing the alarm system control module.

Requirements

- Communication can be set up between the PST2 and alarm system control module.
- The remote controls and transponders are correct and functional.

Note!

- *When the remote control is read out and transferred, only the remote control data are read out and transferred.*
- *The transponder of the individual keys must be adapted to the control module. Four positions are available for this purpose in menu item "Transponder key". This function is described from step 19 onward.*

Work preparation

The following information is required from the IPAS for reading out and transferring remote controls:

- Key learning code
- Immobilizer code

Procedure

1. Connect PST2 to the data link connector, and switch on the ignition.
2. Switch on the PST 2, select vehicle type 911 (996) and start the automatic control module search with the double arrow key [>>].
3. After a brief search, the PST2 reports: "Fault memory reading completed".
4. Select alarm system control module and press the double arrow key [>>].
5. Select "Learning function" in the menu and press the double arrow key [>>].
6. Select menu item 'Read out remote control' and press the double arrow key [>>].

7. "Input key learning code" appears on the screen. Input the key learning code with the arrow keys [∧] and [∨] and press the double arrow key [>>].
8. "Please confirm input" appears on the screen. Check the input key learning code and press the [F7] key.
9. "Remote controls were read out" appears on the screen. Press the double arrow key [<<] twice in order to change to the control module overview. Switch the ignition off, remove the old control module, install the new control module and switch the ignition on again.
10. Press the double arrow key [>>] to set up communication with the new control module.
11. Select the menu item "Learning functions" with the arrow key [∨] and press the double arrow key [>>].
12. The menu item "Immobilizer" is already selected. Press the double arrow key [>>].

Caution!

The immobilizer code can be input only once.

An incorrect input will render the control module useless!

- ***Input and check immobilizer code carefully.***

13. "Input immobilizer code" appears on the screen. Input the immobilizer code with the arrow keys [∧] and [∨] and press the double arrow key [>>].
14. "Please confirm input" appears on the screen. Check the input immobilizer code and press the [F7] key.
15. Select the menu item "Transfer remote control" with the arrow key [∨] and press the double arrow key [>>].
16. "Input key learning code" appears on the screen. Input the key learning code with the arrow keys [∧] and [∨] and press the double arrow key [>>].
17. "Please confirm input" appears on the screen. Check the input key learning code and press the [F7] key.
18. "Remote controls were transferred" appears on the screen.
19. Select the menu item "Transponder key" with the arrow key [∧] and press the double arrow key [>>].

20. "Input key learning code" appears on the screen. Input the key learning code with the arrow keys [∧] and [∨] and press the double arrow key [>>].
21. "Please confirm input" appears on the screen. Check the input key learning code and press the [F7] key.

Note!

As the transponder coils must be taught individually, make sure that the allocation of the locations is the same as described under "Transponder code" on the IPAS printout (see step 22).

22. Four unoccupied positions are displayed on the screen. Position 1 is marked in black. Furthermore, the current transponder code is displayed under "Current key". This code must be stored in the same location as specified in the IPAS printout. Select position and press the [F8] key. The position is occupied with the corresponding transponder code.
23. Withdraw the key and repeat steps 19 to 22 for the remaining keys.

All remote controls have now been transferred from the old control module to the new control module, and the transponders adapted to the new control module.

- Check all hand-held transmitters for operation (lock and unlock the vehicle).
- Check all transponders for operation (engine start).
- Read out fault memory and delete any stored faults.

Identification

The part numbers and the system designation (I 48) can be read out under menu item "Identification".

Fault overview

Fault code	Fault text	Fault effect
1	Doors secured and terminal 15 on	Fault entry
2	Door lock barrel closed, actuated longer than 60 s	Fault entry
3	Door lock barrel open, actutated longer than 60 s	Fault entry
4	Door lock barrel closed Short circuit to ground	Central locking not possible
5	Door lock barrel open Short circuit to ground	Central locking not possible
6	Door lock barrel open/closed Short circuit to ground	Central locking/unlocking not possible
7	Central locking button, closed Short circuit to B+	Central locking not possible
8	Central locking button open Short circuit to B+	Central locking not possible
9	Central locking button open/closed Short circuit to B+	Central locking/unlocking not possible
10	Voltage failure at terminal 30 with alarm system active	Alarm system / central locking - no function
11	Voltage failure during alarm output	Interruption of alarm output
12	Wrong door lock module	Fault entry
13	Left door secured but not locked	Fault entry
14	Right door secured but not locked	Fault entry
15	Control module faulty	No function
16	Signal from airbag Short circuit to B+	Doors not unlocked in case of accident
17	Signal from airbag Short circuit to ground	Doors not unlocked in case of accident
18	Power window control Short circuit to ground	Power window control does not function
19	Status lead, signal converter Short circuit to B+	Engine cannot be started
20	Status lead, signal converter Short circuit to ground	Engine cannot be started
21	W lead (DME - immobilizer) Open circuit	Engine cannot be started
22	Passenger compartment monitoring sensor Short circuit to ground	No passenger compartment monitoring
23	W lead (DME - immobilizer) Short circuit to B+	Fault entry

Fault code	Fault text	Fault effect
24	Control module faulty	Engine cannot be started
25	No terminal 86 S recognised	Fault entry
26	Version error (recoding required)	Fault entry
27	Control module faulty	Fault entry
28	Control module faulty	Fault entry
29	Control module faulty	Fault entry
30	Control module faulty	Fault entry
31	Transponder (relearning required)	Engine cannot be started
32	Passenger compartment monitoring sensor Short circuit to B+ or faulty	No passenger compartment monitoring
33	Passenger compartment monitoring sensor faulty	No passenger compartment monitoring
34	Passenger compartment monitoring sensor Short circuit to B+ or faulty	No passenger compartment monitoring
35	Passenger compartment monitoring sensor faulty	No passenger compartment monitoring
36	Passenger compartment monitoring sensor Short circuit to B+ or faulty	No passenger compartment monitoring
37	Passenger compartment monitoring sensor faulty	No passenger compartment monitoring
39	Signal converter faulty	Engine cannot be started
40	Signal converter coil fault	Engine cannot be started
41	Transponder pill faulty or not present	Engine cannot be started
42	Wrong key or wrong transponder pill	Engine cannot be started
43	Passenger-side release stuck	Central locking not possible
44	Driver-side release stuck	Central locking not possible
45	Servo motor, central locking system Short circuit to B+	Central locking/unlocking not possible
46	Central locking synchronisation	Central locking not possible
47	Central locking synchronisation	Central locking not possible
48	Airbag signal recognized	-
49	K lead	No communication with PST2
50	Radio transmitter code	Fault entry
51	Alarm siren	Fault entry
52	Door lock barrel open, actutated longer than 60 s	Fault entry
53	EPROM fault (checksum)	Fault entry

Fault code	Fault text	Fault effect
54	Tilt sensor not in normal position	Fault entry
58	No current in tank servomotor despite relay actuation	Fault entry
59	Central locking limit position Safe not reached	Central locking not possible
60	Central locking limit position Locked not reached	Central locking not possible
61	Central locking limit position Unlocked not reached	Central locking not possible

Note!

- *Frequency counter: the frequency counter is set to 1 the first time a fault occurs. At every changeover from "not present" to "present", the counter is increased by 1.*
- *After a fault occurs in the alarm system and is remedied, the fault memory must be cleared.*

Fault code 1

Door(s) secured and terminal 15 on

Diagnostic conditions

- Ignition on

Possible cause of fault

- Incorrect coding (country coding)
- Short circuit to voltage/ground or open circuit in the wiring between the control module and door lock
- Door lock faulty

Affected terminals

Connector A, terminals 5, 28, 29

Diagnosis/troubleshooting

Work instruction			Display OK	If not OK
1	Check country coding	• Connect PST 2 and switch on ignition. • Check the country coding in the menu item "Modify coding"	The control module is correctly coded ⇒Step 2	Recode the control module → End
2	Check micro switches of the door locks	• Switch on ignition • Select menu item "Input signals" • Select switch positions "driver's side secured" and "pasenger's side secured"	Driver's side not secured Passenger's side not secured → End	⇒ Step 3
3	Check wiring from alarm system control module to door lock for short circuit to ground	• Switch off ignition • Pull plug A off the control module • Depending on the test result from step 2, pull plug off the driver's and/or passenger's door lock • Measure resistance between plug A on control module pin 5 and ground • Measure the resistance between plug A pin 28 and ground	∞ Ω ⇒ Step 4	Repair wiring harness → End

Work instruction			Display OK	If not OK
4	Check wiring from alarm system control module to door lock for short circuit to B+	♦ Switch on ignition ♦ Measure voltage between plug A on control module pin 5 and ground ♦ Measure voltage between plug A on control module pin 28 and ground	0 V ⇒ Step 5	Repair wiring harness → End
5	Check wiring from control module to door lock for open circuit	♦ Switch off ignition ♦ Measure resistance between plug A on control module pin 5 and pin 7 of plug on left door lock ♦ Measure resistance between plug A on control module pin 28 and pin 7 of plug on right door lock	< 5 Ω ⇒ Step 6	Repair wiring harness → End
6	Check the wire from the central locking switch to the control module for open circuit	♦ Pull plug off central locking switch ♦ Measure resistance between plug on central locking switch pin A1 and pin 29 of control module plug A	< 5 Ω ⇒ Step 7	Repair wiring harness → End
7	Depending on the test result of step 2, replace the driver's/passenger's door lock		→ End	

Fault code 2

Door lock barrel "closed", activated longer than 60 s

Diagnostic conditions

- 60 s waiting time

Possible cause of fault

- Incorrect operation, door lock activated in direction "closed" for longer than 60 s
- Short circuit to voltage/ground or open circuit in the wiring between the alarm system control module and both door locks
- Door lock faulty

Affected terminals

Plug A, terminal 35

Diagnosis/troubleshooting

Work instruction			Display OK	If not OK
1	Check wiring between alarm system control module and door lock (driver/passenger) for short circuit to ground	• Pull plug A off the control module • Pull plug off both door locks • Measure the resistance between plug A pin 35 and ground	∞ Ω ⇒ Step 2	Repair wiring harness → End
2	Check wiring between alarm system control module and door lock (driver/passenger) for short circuit to B+	• Switch on ignition • Measure voltage between plug A on control module pin 35 and ground	0 V ⇒ Step 3	Repair wiring harness → End
3	Check wiring between alarm system control module and door lock (driver/passenger) for open circuit	• Switch off ignition • Measure resistance between plug A pin 35 and plug on driver's door lock pin 5 • Measure resistance between plug A pin 35 and plug on passenger's door lock pin 5	< 5 Ω ⇒ Step 4	Repair wiring harness → End
4	Detect faulty door lock	• In the menu item "Input signals", select "Door lock barrel" • Connect plug on passenger's door lock	Door lock barrel not actuated ⇒ Step 5	⇒ Step 6

Work instruction			Display OK	If not OK
5	Detect faulty door lock	♦ In the menu item "Input signals", select "Door lock barrel" ♦ Connect plug on driver's door lock	Door lock barrel not activated	⇒ Step 7
6	♦ Replace door lock on passenger's side		→ End	
7	♦ Replace door lock on driver's side		→ End	

Fault code 3

Door lock barrel "open", activated longer than 60 s

Diagnostic conditions

- 60 s waiting time

Possible cause of fault

- Incorrect operation, door lock actutated in direction "open" for longer than 60 s
- Short circuit to voltage/ground or open circuit in the wiring between the alarm system control module and both door locks
- Door lock faulty

Affected terminals

Plug A, terminal 15

Diagnosis/troubleshooting

Work instruction			Display OK	If not OK
1	Check wire between alarm system control module and door lock (driver/passenger) for short circuit to ground	♦ Pull plug A off the control module ♦ Pull plug off both door locks ♦ Measure the resistance between plug A pin 15 and ground	∞ Ω ⇒ Step 2	Repair wiring harness → End
2	Check wire between alarm system control module and door lock (driver/passenger) for short circuit to B+	♦ Switch on ignition ♦ Measure voltage between plug A on control module pin 15 and ground	0 V ⇒ Step 3	Repair wiring harness → End
3	Check wire between alarm system control module and door lock (driver/passenger) for open circuit	♦ Switch off ignition ♦ Measure resistance between plug A pin 15 and plug on driver's door lock pin 6 ♦ Measure resistance between plug A pin 35 and plug on passenger's door lock pin 6	< 5 Ω ⇒ Step 4	Repair wiring harness → End
4	Detect faulty door lock	♦ In the menu item "Input signals", select "Door lock barrel" ♦ Connect plug on passenger's door lock	Door lock barrel not actuated ⇒ Step 5	⇒ Step 6

Work instruction			Display OK	If not OK
5	Detect faulty door lock	♦ In the menu item "Input signals", select "Door lock barrel" ♦ Connect plug on driver's door lock	Door lock barrel not actuated	⇒ Step 7
6	♦ Replace door lock on passenger's side		→ End	
7	♦ Replace door lock on driver's side		→ End	

Fault code 4

Door lock barrel "closed", short circuit to ground

Diagnostic conditions

- Door lock barrel actuated in the direction "closed"

Possible cause of fault

- Short circuit to ground/open circuit in the wiring between the alarm system control module and both door locks
- Door lock faulty

Affected terminals

Plug A, terminal 35

Diagnosis/troubleshooting

Work instruction			Display OK	If not OK
1	Check wire between alarm system control module and door lock (driver/passenger) for short circuit to ground	♦ Pull plug A off the control module ♦ Pull plug off both door locks ♦ Measure the resistance between plug A pin 35 and ground	∞ Ω ⇒ Step 2	Repair wiring harness → End
2	Check wire between alarm system control module and door lock (driver/passenger) for short circuit to B+	♦ Switch on ignition ♦ Measure voltage between plug A on control module pin 35 and ground	0 V ⇒ Step 3	Repair wiring harness → End
3	Check wire between alarm system control module and door lock (driver/passenger) for open circuit	♦ Switch off ignition ♦ Measure resistance between plug A pin 35 and plug on driver's door lock pin 5 ♦ Measure resistance between plug A pin 35 and plug on passenger's door lock pin 5	< 5 Ω ⇒ Step 4	Repair wiring harness → End
4	Determine which door lock is faulty	♦ In the menu item "Input signals", select "Door lock barrel" ♦ Connect plug on passenger's door lock	Door lock barrel not actuated ⇒ Step 5	⇒ Step 6
5	Determine which door lock is faulty	♦ In the menu item "Input signals", select "Door lock barrel" ♦ Connect plug on driver's door lock	Door lock barrel not actuated	⇒ Step 7

Work instruction		Display OK	If not OK
6	♦ Replace door lock on passenger's side	→ End	
7	♦ Replace door lock on driver's side	→ End	

Fault code 5

Door lock barrel "open", short circuit to ground

Diagnostic conditions

- Door lock barrel actuated in the direction "open"

Possible cause of fault

- Short circuit to ground/open circuit in the wiring between the alarm system control module and both door locks
- Door lock faulty

Affected terminals

Plug A, terminal 15

Diagnosis/troubleshooting

Work instruction			Display OK	If not OK
1	Check wire between alarm system control module and door lock (driver/passenger) for short circuit to ground	♦ Pull plug A off the control module ♦ Pull plug off both door locks ♦ Measure the resistance between plug A pin 15 and ground	∞ Ω ⇒ Step 2	Repair wiring harness → End
2	Check wire between alarm system control module and door lock (driver/passenger) for short circuit to B+	♦ Switch on ignition ♦ Measure voltage between plug A on control module pin 15 and ground	0 V ⇒ Step 3	Repair wiring harness → End
3	Check wire between alarm system control module and door lock (driver/passenger) for open circuit	♦ Switch off ignition ♦ Measure resistance between plug A pin 15 and plug on driver's door lock pin 6 ♦ Measure resistance between plug A pin 15 and plug on passenger's door lock pin 6	< 5 Ω ⇒ Step 4	Repair wiring harness → End
4	Determine which door lock is faulty	♦ In the menu item "Input signals", select "Door lock barrel" ♦ Connect plug on passenger's door lock	Door lock barrel not actuated ⇒ Step 5	⇒ Step 6
5	Determine which door lock is faulty	♦ In the menu item "Input signals", select "Door lock barrel" ♦ Connect plug on driver's door lock	Door lock barrel not actuated	⇒ Step 7

Work instruction		Display OK	If not OK
6	♦ Replace door lock on passenger's side	→ End	
7	♦ Replace door lock on driver's side	→ End	

Fault code 6

Door lock barrel "open/closed", short circuit to ground

Diagnostic conditions

- Door lock barrel actuated in the direction "open"

Possible cause of fault

- Short circuit to ground/open circuit in the wiring between the alarm system control module and both door locks
- Door lock faulty

Affected terminals

Plug A, terminals 15 and 35

Diagnosis/troubleshooting

Work instruction			Display OK	If not OK
1	Check wire between alarm system control module and door lock (driver/passenger) for short circuit to ground	• Pull plug A off the control module • Pull plug off both door locks • Measure the resistance between plug A pin 15 and ground • Measure the resistance between plug A pin 35 and ground	∞ Ω ⇒ Step 2	Repair wiring harness → End
2	Check wire between alarm system control module and door lock (driver/passenger) for short circuit to B+	• Switch on ignition • Measure voltage between plug A on control module pin 15 and ground • Measure voltage between plug A on control module pin 35 and ground	0 V ⇒ Step 3	Repair wiring harness → End

Work instruction			Display OK	If not OK
3	Check wire between alarm system control module and door lock (driver/passenger) for open circuit	♦ Switch off ignition ♦ Measure resistance between plug A pin 15 and plug on driver's door lock pin 6 ♦ Measure resistance between plug A pin 15 and plug on passenger's door lock pin 6 ♦ Measure resistance between plug A pin 35 and plug on driver's door lock pin 5 ♦ Measure resistance between plug A pin 35 and plug on passenger's door lock pin 5	< 5 Ω ⇒ Step 4	Repair wiring harness → End
4	Determine which door lock is faulty	♦ In the menu item "Input signals", select "Door lock barrel" ♦ Connect plug on passenger's door lock	Door lock barrel not actuated ⇒ Step 5	⇒ Step 6
5	Determine which door lock is faulty	♦ In the menu item "Input signals", select "Door lock barrel" ♦ Connect plug on driver's door lock	Door lock barrel not actuated	⇒ Step 7
6	♦ Replace door lock on passenger's side		→ End	
7	♦ Replace door lock on driver's side		→ End	

Fault code 7

Central locking button closed, short circuit to B+

Diagnostic conditions

- Central locking button actuated

Possible cause of fault

- Short circuit to voltage in the wiring between the alarm system control module and the central locking switch

Affected terminals

Plug A, terminal 29

Diagnosis/troubleshooting

Work instruction			Display OK	If not OK
1	Check central locking switch	♦ Switch off ignition ♦ Pull plug A off the control module ♦ Pull plug off central locking switch ♦ Switch on ignition ♦ Measure voltage between plug A on alarm system control module pin 29 and ground	0 V ⇒ Step 2	Repair wiring harness → End
2	Check central locking switch	♦ Measure resistance between pins 1 and 2 of plug for central locking switch	approx. 180 Ω at 20 °C ⇒ Step 3	Replace resistor or repair wiring harness → End
3	Check operating points of central locking switch	♦ Measure resistance between pins 3 and A1 on central locking switch ♦ Measure resistance between pins 4 and 2 on central locking switch	Central locking switch not actuated in "open" direction ∞ Ω Central locking switch actuated in "open" direction < 5 Ω ⇒ Step 4	⇒ Step 5 → End

Work instruction			Display OK	If not OK
4	Check operating points of central locking switch	♦ Measure resistance between pins 4 and 1 on central locking switch	Central locking switch not actuated in "close" direction Ω Central locking switch actuated in "close" direction < 5 Ω ⇒ Step 6	⇒ Step 5 → End
5	♦ Replace central locking switch		→ End	
6	♦ Replace control module		→ End	

Fault code 8

Central locking button open, short circuit to B+

Diagnostic conditions

- Central locking button actuated

Possible cause of fault

- Short circuit to voltage in the wiring between the alarm system control module and the central locking switch

Affected terminals

Plug A, terminal 29

Diagnosis/troubleshooting

Work instruction			Display OK	If not OK
1	Check central locking switch	♦ Switch off ignition ♦ Pull plug A off the control module ♦ Pull plug off central locking switch ♦ Switch on ignition ♦ Measure voltage between plug A on alarm system control module pin 29 and ground	0 V ⇒ Step 2	Repair wiring harness → End
2	Check central locking switch	♦ Measure resistance between pins 1 and 2 of plug for central locking switch	approx. 180 Ω at 20 °C ⇒ Step 3	Replace resistor or repair wiring harness → End
3	Check operating points of central locking switch	♦ Measure resistance between pins 2 and 4 on central locking switch	Central locking switch not actuated in "open" direction ∞ Ω Central locking switch actuated in "open" direction < 5 Ω ⇒ Step 4	⇒ Step 5 → End

Work instruction			Display OK	If not OK
4	Check operating points of central locking switch	♦ Measure resistance between pins 1 and 4 on central locking switch	Central locking switch not actuated in "close" direction ∞ Ω Central locking switch actuated in "close" direction < 5 Ω ⇒ Step 6	⇒ Step 5 → End
5	♦ Replace central locking switch		→ End	
6	♦ Replace control module		→ End	

Fault code 9

Central locking button open/closed, short circuit to B+

Diagnostic conditions

- Central locking button actuated

Possible cause of fault

- Short circuit to voltage in the wiring between the alarm system control module and the central locking switch
- Central locking switch faulty

Affected terminals

Plug A, terminal 29

Diagnosis/troubleshooting

Work instruction			Display OK	If not OK
1	Check central locking switch	♦ Switch off ignition ♦ Pull plug A off the control module ♦ Pull plug off central locking switch ♦ Switch on ignition ♦ Measure voltage between plug A on alarm system control module pin 29 and ground	0 V ⇒ Step 2	Repair wiring harness → End
2	Check central locking switch	♦ Measure resistance between pins 1 and 2 of plug for central locking switch	approx. 180 Ω at 20 °C ⇒ Step 3	Replace resistor or repair wiring harness → End
3	Check operating points of central locking switch	♦ Measure resistance between pins 2 and 4 on central locking switch ♦ Measure resistance between pins 2 and 4 on central locking switch	Central locking switch not actuated in "open" direction ∞ Ω Central locking switch actuated in "open" direction < 5 Ω ⇒ Step 4	⇒ Step 5 → End

Work instruction			Display OK	If not OK
4	Check operating points of central locking switch	♦ Measure resistance between pins 4 and 1 on central locking switch	Central locking switch not actuated in "close" direction ∞ Ω Central locking switch actuated in "close" direction < 5 Ω ⇒ Step 6	⇒ Step 5 → End
5	♦ Replace central locking switch		→ End	
6	♦ Replace control module		→ End	

Fault code 10

Voltage failure at terminal 30 with alarm system active

Diagnostic conditions

- Alarm system is activated.

Possible cause of fault

- Low battery positive voltage
- Open circuit in wiring to the control module

Affected terminals

Plug B, terminal 7

Diagnosis/troubleshooting

Work instruction			Display OK	If not OK
1	Visual inspection	♦ Check plug B on alarm system control module for contact and corrosion	⇒ Step 2	Repair plug B or wiring harness → End
2	Check power supply (terminal 30)	♦ Switch off ignition ♦ Unplug plug B from the "alarm system" control module. ♦ Measure voltage between plug B on control module pin 7 and ground	> 11 V ⇒ Step 7	⇒ Step 3
3	Check wiring from the "mini relay" to the alarm system control module for open circuit	♦ Pull off mini relay in the fuse box ♦ Measure resistance between plug B on control module pin 7 and pin 1 on the mini-relay carrier	< 5Ω ⇒ Step 4	Repair wiring harness → End
4	Check wiring from the current distributor (F5) to the mini-relay carrier	♦ Measure voltage between the mini-relay carrier pin 4 and ground	> 11 V ⇒ Step 5	Repair wiring harness or check fuse in current distributor → End
5	Check wire from ground point 3 to the mini-relay carrier	♦ Measure resistance between the mini-relay carrier pin 5 and ground	< 5 Ω ⇒ Step 6	Repair wiring harness or check ground point 3 for corrosion → End
6	♦ Replace mini relay		→ End	
7	♦ Replace control module		→ End	

Fault code 11

Voltage failure during alarm output

Diagnostic conditions

- Voltage failure during alarm triggering

Possible cause of fault

- ♦ Low battery positive voltage
- ♦ Open circuit in wiring to the control module

Affected terminals

Plug B, terminal 7

Diagnosis/troubleshooting

Work instruction			Display OK	If not OK
1	Visual inspection	♦ Check plug B on alarm system control module for contact and corrosion	⇒ Step 2	Repair plug B or wiring harness → End
2	Check power supply (terminal 30)	♦ Switch off ignition ♦ Unplug plug B from the "alarm system" control module. ♦ Measure voltage between plug B on control module pin 7 and ground	> 11 V ⇒ Step 7	⇒ Step 3
3	Check wire from the "mini relay" to the alarm system control module for open circuit	♦ Pull off mini relay in the fuse box ♦ Measure resistance between plug B on control module pin 7 and pin 1 on the mini-relay carrier	< 5Ω ⇒ Step 4	Repair wiring harness → End
4	Check wire from the current distributor (F5) to the mini-relay carrier	♦ Measure voltage between the mini-relay carrier pin 4 and ground	> 11 V ⇒ Step 5	Repair wiring harness or check fuse in current distributor → End
5	Check wire from ground point 3 to the mini-relay carrier	♦ Measure resistance between the mini-relay carrier pin 5 and ground	< 5 Ω ⇒ Step 6	Repair wiring harness or check ground point 3 for corrosion → End
6	♦ Replace mini relay		→ End	
7	♦ Replace control module		→ End	

Fault code 12

Wrong door lock module

Diagnostic conditions

- Vehicle is locked or unlocked

Possible cause of fault

- Wrong door lock installed

Note!

- *USA vehicles do not have the "Door secured" function.*
- *Fault code 12 is set if the wrong door locks are installed.*

Affected terminals

Plug A, terminals 5 and 28

Diagnosis/troubleshooting

Work instruction		Display OK	If not OK
1	♦ Replace driver's/passenger's door lock	→ End	

Fault code 13

Left door secured but not locked

Diagnostic conditions

- Vehicle secured "Save position"

Possible cause of fault

- Short circuit to ground in the wiring between the alarm system control module and the left door lock
- Left door lock faulty

Affected terminals

Plug A, terminal 30 (left-hand drive vehicle)

Plug A, terminal 32 (right-hand drive vehicle)

Diagnosis/troubleshooting

Work instruction			Display OK	If not OK
1	Check wire from control module to left door lock for short circuit to ground	• Switch off ignition • Pull plug A off the alarm system control module • Pull plug off the left door lock • Left-hand drive vehicle: Measure resistance between plug A on control module pin 30 and ground • Right-hand drive vehicle: Measure resistance between plug A on control module pin 32 and ground	∞ Ω ⇒ Step 2	Repair wiring harness → End
2	Check wire from control module to left door lock for short circuit to B+	• Switch on ignition • Left-hand drive vehicle: Measure voltage between plug A on control module pin 32 and ground • Right-hand drive vehicle: Measure voltage between plug A on control module pin 30 and ground	0 V ⇒ Step 3	Repair wiring harness → End

Work instruction			Display OK	If not OK
3	Check wire from control module to left door lock for open circuit	♦ Switch off ignition ♦ Left-hand drive vehicle: Measure resistance between plug A on control module pin 30 and pin 3 of plug on left door lock ♦ Right-hand drive vehicle: Measure resistance between plug A on control module pin 32 and pin 3 of plug on left door lock	< 5 Ω ⇒ Step 4	Repair wiring harness → End
4	♦ Replace left door lock		→ End	

Fault code 14

Right door secured but not locked

Diagnostic conditions

- Vehicle secured "Save position"

Possible cause of fault

- Short circuit to ground or open circuit in the wiring between the alarm system control module and the right door lock
- Right door lock faulty

Affected terminals

Plug A, terminal 30 (left-hand drive vehicle)

Plug A, terminal 32 (right-hand drive vehicle)

Diagnosis/troubleshooting

Work instruction			Display OK	If not OK
1	Check wire from control module to right door lock for short circuit to ground	• Switch off ignition • Pull plug A off the alarm system control module • Pull plug off the right door lock • Left-hand drive vehicle: Measure resistance between plug A on control module pin 32 and ground • Right-hand drive vehicle: Measure resistance between plug A on control module pin 30 and ground	∞ Ω ⇒ Step 2	Repair wiring harness → End
2	Check wire from control module to right door lock for short circuit to B+	• Switch on ignition • Left-hand drive vehicle: Measure voltage between plug A on control module pin 32 and ground • Right-hand drive vehicle: Measure voltage between plug A on control module pin 30 and ground	0 V ⇒ Step 3	Repair wiring harness → End

Work instruction			Display OK	If not OK
3	Check wire from control module to right door lock for open circuit	♦ Switch off ignition ♦ Left-hand drive vehicle: Measure resistance between plug on alarm system control module pin 32 and pin 3 of plug on right door lock ♦ Right-hand drive vehicle: Measure resistance between plug on alarm system control module pin 30 and pin 3 of plug on right door lock	< 5 Ω ⇒ Step 3	Repair wiring harness → End
4	♦ Replace right door lock		→ End	

Fault code 15

Control module faulty

Diagnostic conditions

- Control of central locking system "locked or safe position"

Possible cause of fault

- Control module faulty

Affected terminals

-

Diagnosis/troubleshooting

Work instruction		Display OK	If not OK
1	♦ Replace alarm system control module	→ End	

Fault code 16

Signal from airbag, short circuit to B+

Diagnostic conditions

- 45 s after terminal 86S or terminal 15 has been switched on

Possible cause of fault

- Short circuit to voltage in wiring between the alarm system control module and the airbag and DME control modules

Affected terminals

Plug A, terminal 12

Diagnosis/troubleshooting

Work instruction			Display OK	If not OK
1	Check wiring for short circuit to B+	♦ Switch off ignition ♦ Pull plug A off the alarm system control module ♦ Pull plug off the airbag control module ♦ Pull plug D off the DME control module ♦ Switch on ignition ♦ Measure voltage between plug A on alarm system control module pin 12 and ground	0 V ⇒ Step 2	Repair wiring harness → End
2	Detect faulty control module	♦ Switch off ignition ♦ Push plug A back onto the alarm system control module ♦ Push plug back onto the airbag control module ♦ Switch on the ignition and read out the fault memory again	Fault code 16 no longer present ⇒ Step 4	Fault 16 still present ⇒ Step 3
3	Detect faulty control module	♦ Switch off ignition ♦ Pull plug off the airbag control module ♦ Push plug D back onto the DME control module ♦ Read out the fault memory again	Fault code 16 no longer present ⇒ Step 5	Fault 16 still present ⇒ Step 6
4	♦ Replace DME control module		→ End	

Work instruction		Display OK	If not OK
5	♦ Replace airbag control module	→ End	
6	♦ Replace alarm system control module	→ End	

Fault code 17

Signal from airbag, short circuit to ground

Diagnostic conditions

- 45 s after terminal 86S or terminal 15 has been switched on

Possible cause of fault

- Short circuit to ground in wiring between the alarm system control module and the airbag and DME control modules

Affected terminals

Plug A, terminal 12

Diagnosis/troubleshooting

Work instruction			Display OK	If not OK
1	Check wiring for short circuit to ground	♦ Switch off ignition ♦ Pull plug A off the alarm system control module ♦ Pull plug off the airbag control module ♦ Pull plug D off the DME control module ♦ Measure resistance between plug A on alarm system control module pin 12 and ground	∞ Ω ⇒ Step 2	Repair wiring harness → End
2	Replace faulty control module	♦ Push plug A back onto the alarm system control module ♦ Push plug back onto the airbag control module ♦ Switch on the ignition and read out the fault memory again	Fault code 16 no longer present ⇒ Step 4	Fault 16 still present ⇒ Step 3
3	Replace faulty control module	♦ Switch off ignition ♦ Pull plug off the airbag control module ♦ Push plug D back onto the DME control module ♦ Read out the fault memory again	Fault code 16 no longer present ⇒ Step 5	Fault 16 still present ⇒ Step 6
4	♦ Replace DME control module		→ End	
5	♦ Replace airbag control module		→ End	
6	♦ Replace alarm system control module		→ End	

Fault code 18

Power window control, short circuit to ground

Diagnostic conditions

- Power window button actuated

Possible cause of fault

- Short circuit to ground/open circuit between alarm system control module and power window motors

Affected terminals

Plug A, terminal 18

Diagnosis/troubleshooting

Work instruction			Display OK	If not OK
1	Check the wire from the alarm system control module to the switch for power windows for short to ground.	♦ Switch off ignition ♦ Pull plug A off the alarm system control module ♦ Pull plug off switch for sliding roof ♦ Pull plug off switch for power windows ♦ Measure resistance between plug A on alarm system control module pin 18 and ground	∞ Ω ⇒ Step 2	Repair wiring harness → End
2	Check the wire from the alarm system control module to the switch for power windows for open circuit	♦ Measure resistance between plug A on the alarm system control module pin 18 and plug pin 4 on the switch for power windows	< 5 Ω ⇒ Step 3	Repair wiring harness → End
3	Check wiring from the switch for power windows to the power window motors on the right and left for short circuit to ground	♦ Pull plug off the power window motor on the right and left ♦ Measure resistance between pin 1 of each switch for power windows and ground ♦ Measure resistance between pin 2 of each switch for power windows and ground	∞ Ω ⇒ Step 4	Repair wiring harness → End

Work instruction			Display OK	If not OK
4	Check wiring from the switch for power windows to the power window motors on the right and left for short circuit to ground	♦ Measure resistance between pin 1 of each switch for power windows and pin 4 of each plug on power window motors ♦ Measure resistance between pin 2 of each switch for power windows and pin 3 of plug on power window motors	< 5 Ω ⇒ Step 5	Repair wiring harness → End
5	Detect faulty component	♦ Push plug on switch for sliding roof again ♦ Connect special tools 9616 and 9617 ♦ Measure voltage at special tool 9616, pin 18 and ground	> 11 V ⇒ Step 6	Check switch for the sliding roof or wiring to the drive unit for the sliding roof → End
6	Detect faulty component	♦ Push plug on left power window motor again ♦ Push plug on switch for left power window again ♦ Actuate switch for left power window and simultaneously measure the voltage between special tool 9616, pin 18 and ground	> 11 V ⇒ Step 7	⇒ Step 8
7	Detect faulty component	♦ Push plug on right power window motor again ♦ Push plug on switch for right power window again ♦ Actuate switch for right power window and simultaneously measure the voltage between special tool 9616, pin 18 and ground	> 11 V →End	⇒ Step 9
8	♦ Replace left power window motor		→ End	
9	♦ Replace right power window motor		→ End	

Fault code 19

Status lead, signal converter, short circuit to B+

Diagnostic conditions

- Terminal 86S switched on

Possible cause of fault

- Short circuit to voltage in wire between the alarm system control module and the signal converter

Affected terminals

Plug A, terminals 3 and 4

Diagnosis/troubleshooting

Work instruction			Display OK	If not OK
1	Check wiring from signal converter to control module for short circuit to ground	• Switch off ignition • Pull plug A off the control module • Pull plug off the signal converter • Measure resistance between plug A on control module pin 4 and ground • Measure resistance between plug A on control module pin 3 and ground	∞ Ω ⇒ Step 2	Repair wiring harness → End
2	Check wiring from signal converter to control module for short circuit to B+	• Switch off ignition • Pull plug A off the control module • Pull plug off the signal converter • Switch on ignition • Measure voltage between plug A on control module pin 4 and ground • Measure voltage between plug A on control module pin 3 and ground	0 V ⇒ Step 3	Repair wiring harness → End

Work instruction			Display OK	If not OK
3	Check wiring from signal converter to the control module for open circuit	♦ Measure resistance between plug A on control module pin 4 and plug on signal converter pin 4 ♦ Measure resistance between plug A on control module pin 3 and plug on signal converter pin 6	< 5 Ω ⇒ Step 4	Repair wiring harness → End
4	♦ Replace signal converter		→ End	

Fault code 20

Status lead, signal converter, short circuit to ground

Diagnostic conditions

- Terminal 86S switched on

Possible cause of fault

- Short circuit to ground in the wire between the alarm system control module and the signal converter

Affected terminals

Plug A, terminals 3 and 4

Diagnosis/troubleshooting

Work instruction			Display OK	If not OK
1	Check wiring from signal converter to control module for short circuit to ground	♦ Switch off ignition ♦ Pull plug A off the control module ♦ Pull plug off the signal converter ♦ Switch on ignition ♦ Measure resistance between plug A on control module pin 4 and ground ♦ Measure resistance between plug A on control module pin 3 and ground	∞ Ω ⇒ Step 2	Repair wiring harness→ End
2	Check wiring from signal converter to the control module for open circuit	♦ Switch off ignition ♦ Measure resistance between plug A on control module pin 4 and plug on signal converter pin 6 ♦ Measure resistance between plug A on control module pin 3 and plug on signal converter pin 8	< 5 Ω ⇒ Step 3	Repair wiring harness → End
3	♦ Replace signal converter		→ End	

Fault code 21

W lead (DME - immobilizer), open circuit

Diagnostic conditions

- Ignition on

Possible cause of fault

- Short circuit to ground/open circuit in the communication lead between the alarm system control module and the DME control module

Affected terminals

Plug A, terminal 23

Diagnosis/troubleshooting

Work instruction			Display OK	If not OK
1	Check wire from the alarm system control module to the DME control module for short to ground.	♦ Switch off ignition ♦ Pull plug A off the alarm system control module ♦ Pull plug A off the DME control module ♦ Measure resistance between plug A on alarm system control module pin 23 and ground	∞ Ω ⇒ Step 2	Repair wiring harness → End
2	Check wire from the alarm system control module to the DME control module for open circuit	♦ Measure resistance between plug A on alarm system control module pin 23 and plug A on DME control module pin 3	< 5 Ω ⇒ Step 3	Repair wiring harness → End
3	♦ Replace DME control module as a test		→ End	

Fault code 22

Passenger compartment monitoring sensor, short circuit to ground

Diagnostic conditions

- Alarm system primed

Possible cause of fault

- Short circuit to ground/open circuit in the wire between the alarm system control module and the passenger compartment monitoring sensor

Affected terminals

Plug A, terminal 24

Diagnosis/troubleshooting

Work instruction			Display OK	If not OK
1	Check the wire from the passenger compartment monitoring sensor to the alarm system control module for short circuit to ground	♦ Switch off ignition ♦ Pull plug A off the alarm system control module ♦ Pull off the plug on the passenger compartment monitoring sensor ♦ Measure resistance between plug A on alarm system control module pin 24 and ground	∞ Ω ⇒ Step 2	Repair wiring harness → End
2	Check the wire from the passenger compartment monitoring sensor to the alarm system control module for open circuit	♦ Measure resistance between plug A on alarm system control module pin 24 and plug on passenger compartment monitoring sensor pin 3	< 5 Ω ⇒ Step 3	Repair wiring harness → End
3	♦ Replace passenger compartment monitoring sensor		→ End	

Fault code 23

W lead (DME - immobilizer), short circuit to B+

Diagnostic conditions

- Ignition on

Possible cause of fault

- Short circuit to voltage in the communication lead between the alarm system control module and the DME control module

Affected terminals

Plug A, terminal 23

Diagnosis/troubleshooting

Work instruction			Display OK	If not OK
1	Check wire from the alarm system control module to the DME control module for short circuit to B+.	♦ Switch off ignition ♦ Pull plug A off the alarm system control module ♦ Pull plug A off the DME control module ♦ Switch on ignition ♦ Measure voltage between plug A on alarm system control module pin 23 and ground	0 V ⇒ Step 2	Repair wiring harness → End
2	Check wire from the alarm system control module to the DME control module for open circuit	♦ Measure resistance between plug A on alarm system control module pin 23 and plug A on DME control module pin 3	< 5 Ω ⇒ Step 3	Repair wiring harness → End
3	♦ Replace DME control module as a test		→ End	

Fault code 24

Control module faulty

Diagnostic conditions

- Ignition on

Possible cause of fault

- Control module faulty

Affected terminals

-

Diagnosis/troubleshooting

Work instruction		Display OK	If not OK
1	♦ Replace control module	→ End	

Fault code 25

No terminal 86 S recognised

Diagnostic conditions

- Ignition on

Possible cause of fault

- Terminal 86 S is not detected when terminal 15 is switched on
- Fuse E1 faulty
- Short circuit to ground/open circuit in the wiring between the alarm system control module and the ignition lock
- Ignition lock defective

Affected terminals

Plug A, terminal 16

Diagnosis/troubleshooting

Work instruction			Display OK	If not OK
1	Check fuse	♦ Check fuse E 1	⇒ Step 2	Replace fuse E 1 → End
2	Check wiring from ignition lock to fuse carrier for open circuit	♦ Switch off ignition ♦ Pull off fuse E 1 ♦ Switch on ignition ♦ Measure voltage between fuse carrier (fuse E 1) pin 1 and ground	> 11 V ⇒ Step 3	⇒ Step 5
3	Check the wire from the fuse carrier to the alarm system control module for open circuit	♦ Switch off ignition ♦ Pull plug A off the alarm system control module ♦ Switch on ignition ♦ Measure voltage between plug A on control module pin 16 and ground	> 11 V ⇒ Step 7	⇒ Step 4
4	Check the wire from the fuse carrier to the alarm system control module for open circuit	♦ Switch off ignition ♦ Measure resistance between plug A on alarm system control module pin 16 and fuse E 1 pin 2	< 5Ω ⇒ Step 6	Repair wiring harness → End

Work instruction			Display OK	If not OK
5	Check wire from ignition lock to fuse carrier for open circuit	♦ Switch off ignition ♦ Pull off the plug on the ignition lock ♦ Measure resistance between plug on ignition lock pin 86 S and fuse carrier (fuse E1) pin 1	< 5 Ω ⇒ Step 6	Repair wiring harness → End
6	♦ Repair ignition lock		→ End	
7	♦ Replace alarm system control module		→ End	

Fault code 26

Version error (recoding required)

Diagnostic conditions

- Ignition on

Possible cause of fault

- Incorrect version coding

Affected terminals

-

Diagnosis/troubleshooting

Work instruction		Display OK	If not OK
1	♦ Check equipment version and recode	→ End	

Fault code 27

Control module faulty

Diagnostic conditions

- Vehicle locked and alarm system activated

Possible cause of fault

- Control module faulty

Affected terminals

-

Diagnosis/troubleshooting

Work instruction		Display OK	If not OK
1	♦ Replace control module	→ End	

Fault code 28

Control module faulty

Diagnostic conditions

- Vehicle locked and alarm system activated

Possible cause of fault

- Control module faulty

Affected terminals

-

Diagnosis/troubleshooting

Work instruction		Display OK	If not OK
1	♦ Replace control module	→ End	

Fault code 29

Control module faulty

Diagnostic conditions

- Vehicle locked and alarm system activated

Possible cause of fault

- Control module faulty

Affected terminals

-

Diagnosis/troubleshooting

Work instruction		Display OK	If not OK
1	♦ Replace control module	→ End	

Fault code 30

Control module faulty

Diagnostic conditions

- Ignition on

Possible cause of fault

- Control module faulty

Affected terminals

-

Diagnosis/troubleshooting

Work instruction		Display OK	If not OK
1	Check battery positive voltage	⇒ Step 2	Charge or replace battery → End
2	♦ Replace control module	→ End	

Fault code 31

Transponder (reteaching required)

Diagnostic conditions

- Ignition on

Possible cause of fault

- Transponder key has not been taught

Affected terminals

-

Diagnosis/troubleshooting

Work instruction		Display OK	If not OK
1	♦ Reteach transponder key	→ End	

Fault code 32

Passenger compartment monitoring sensor, short circuit to B+ or faulty

Diagnostic conditions

- Alarm system activated

Possible cause of fault

- Short circuit to voltage in the wiring between the alarm system control module and the passenger compartment monitoring sensor
- Passenger compartment monitoring sensor faulty

Affected terminals

Plug A, terminals 8 and 24

Diagnosis/troubleshooting

Work instruction			Display OK	If not OK
1	Check supply voltage of the sensor	• Switch off ignition • Pull off the plug on the passenger compartment monitoring sensor • Measure voltage between the plug on the passenger compartment monitoring sensor pin 1 and pin 4	> 11 V ⇒ Step 2	Check or repair wiring harness → End
2	Check the wiring from passenger compartment monitoring sensor to alarm system control module for short circuit to B+	• Pull plug A off the alarm system control module • Switch on ignition • Measure voltage between plug A on alarm system pin 24 and ground • Measure voltage between plug A on alarm system pin 8 and ground	0 V ⇒ Step 3	Repair wiring harness → End
3	• Replace passenger compartment monitoring sensor		→ End	

Fault code 33

Passenger compartment monitoring sensor faulty

Diagnostic conditions

- Alarm system activated

Possible cause of fault

- Passenger compartment monitoring faulty

Affected terminals

-

Diagnosis/troubleshooting

Work instruction		Display OK	If not OK
1	♦ Replace passenger compartment monitoring sensor	→ End	

Fault code 34

Passenger compartment monitoring sensor, short circuit to B+ or faulty

Diagnostic conditions

- Alarm system activated

Possible cause of fault

- Short circuit to voltage in the wiring between the alarm system control module and the passenger compartment monitoring sensor
- Passenger compartment monitoring sensor faulty

Affected terminals

Plug A, terminals 8 and 24

Diagnosis/troubleshooting

Work instruction			Display OK	If not OK
1	Check supply voltage of the sensor	• Switch off ignition • Pull off the plug on the passenger compartment monitoring sensor • Measure voltage between the plug on the passenger compartment monitoring sensor pin 1 and pin 4	> 11 V ⇒ Step 2	Check or repair wiring harness → End
2	Check the wiring from passenger compartment monitoring sensor to alarm system control module for short circuit to B+	• Pull plug A off the alarm system control module • Switch on ignition • Measure voltage between plug A on alarm system pin 24 and ground • Measure voltage between plug A on alarm system pin 8 and ground	0 V ⇒ Step 3	Repair wiring harness → End

Work instruction			Display OK	If not OK
3	Check the wiring from passenger compartment monitoring sensor to alarm system control module for open circuit	♦ Switch off ignition ♦ Measure resistance between plug A on alarm system pin 24 and plug on passenger compartment monitoring sensor pin 3 ♦ Measure resistance between plug A on alarm system pin 8 and plug on passenger compartment monitoring sensor pin 2	< 5 Ω ⇒ Step 4	Repair wiring harness → End
4	♦ Replace passenger compartment monitoring sensor		→ End	

Fault code 35

Passenger compartment monitoring sensor faulty

Diagnostic conditions

- Alarm system activated

Possible cause of fault

- Passenger compartment monitoring sensor faulty

Affected terminals

-

Diagnosis/troubleshooting

Work instruction		Display OK	If not OK
1	♦ Replace passenger compartment monitoring sensor	→ End	

Fault code 36

Passenger compartment monitoring sensor, short circuit to B+ or faulty

Diagnostic conditions

- Alarm system activated

Possible cause of fault

- Short circuit to voltage in the wiring between the alarm system control module and the passenger compartment monitoring sensor
- Passenger compartment monitoring sensor faulty

Affected terminals

Plug A, terminals 8 and 24

Diagnosis/troubleshooting

Work instruction			Display OK	If not OK
1	Check supply voltage of the sensor	• Switch off ignition • Pull off the plug on the passenger compartment monitoring sensor • Measure voltage between the plug on the passenger compartment monitoring sensor pin 1 and pin 4	> 11 V ⇒ Step 2	Check or repair wiring harness → End
2	Check the wiring from passenger compartment monitoring sensor to alarm system control module for short circuit to B+	• Pull plug A off the alarm system control module • Switch on ignition • Measure voltage between plug 24 on alarm system pin 24 and ground • Measure voltage between plug A on alarm system pin 8 and ground	0 V ⇒ Step 3	Repair wiring harness → End
3	• Replace passenger compartment monitoring sensor		→ End	

Fault code 37

Passenger compartment monitoring sensor faulty

Diagnostic conditions

- Alarm system activated

Possible cause of fault

♦ Passenger compartment monitoring sensor faulty

Affected terminals

-

Diagnosis/troubleshooting

Work instruction		Display OK	If not OK
1	♦ Replace passenger compartment monitoring sensor	→ End	

Fault code 39

Signal converter faulty

Diagnostic conditions

- Terminal 86 S or terminal 15 on

Possible cause of fault

- Short circuit to voltage/ground or open circuit in the wiring between the alarm system control module and the signal converter

Affected terminals

Plug A, terminals 3 and 4

Diagnosis/troubleshooting

Work instruction			Display OK	If not OK
1	Check power supply of the signal converter	♦ Switch off ignition ♦ Pull plug off the signal converter ♦ Switch on terminal 86 S ♦ Measure voltage between plug on the signal converter pin 5 and ground ♦ Measure voltage between the plug on the signal converter pin 5 and pin 4	> 11 V ⇒ Step 2	Repair wiring harness
2	Check wiring from signal converter to alarm system control module for short circuit to ground	♦ Switch off ignition ♦ Pull plug A off the alarm system control module ♦ Measure resistance between plug on alarm system pin 3 and ground ♦ Measure resistance between plug on alarm system pin 4 and ground	∞ Ω ⇒ Step 3	Repair wiring harness → End
3	Check wiring from signal converter to alarm system control module for short circuit to B+	♦ Switch on ignition ♦ Measure voltage between plug A on control module pin 3 and ground ♦ Measure voltage between plug A on control module pin 4 and ground	0 V ⇒ Step 4	Repair wiring harness → End

Work instruction			Display OK	If not OK
4	Check wiring from signal converter to alarm system control module for open circuit	♦ Switch off ignition ♦ Measure resistance between plug A on control module pin 3 and plug on signal converter pin 8 ♦ Measure resistance between plug A on control module pin 4 and plug on signal converter pin 6	< 5 Ω ⇒ Step 5	Repair wiring harness → End
5	♦ Replace signal converter		→ End	

Fault code 40

Signal converter coil fault

Diagnostic conditions

- Ignition on

Possible cause of fault

- Short circuit to voltage/ground or open circuit in the wiring between the transponder coil and the signal converter

Affected terminals

Plug on signal converter, terminals 1 and 2

Diagnosis/troubleshooting

Work instruction			Display OK	If not OK
1	Check the transponder coil	♦ Pull plug off the signal converter ♦ Measure resistance on plug of the signal converter between pin 1 and pin 2	20 - 25 Ω at 20 °C ⇒ Step 2	→ Step 5
2	Check wiring from transponder coil to signal converter for short circuit to ground	♦ Pull plug off transponder coil ♦ Measure resistance between plug on transponder coil pin 1 and ground ♦ Measure resistance between plug on transponder coil pin 2 and ground	∞ Ω ⇒ Step 3	Repair wiring harness → End
3	Check wiring from transponder coil to signal converter for short circuit to B+	♦ Measure voltage between plug on transponder coil pin 1 and ground ♦ Measure voltage between plug on transponder coil pin 2 and ground	0 V ⇒ Step 4	Repair wiring harness → End
4	Check wiring from transponder coil to signal converter for open circuit	♦ Measure resistance between plug on transponder coil pin 1 and plug on signal converter pin 1 ♦ Measure resistance between plug on transponder coil pin 2 and plug on signal converter pin 2	⇒ Step 6	Repair wiring harness → End

Work instruction		Display OK	If not OK
5	♦ Replace transponder coil	→ End	
6	♦ Replace signal converter	→ End	

Fault code 41

Transponder pill faulty or not present

Diagnostic conditions

- Ignition on

Possible cause of fault

- Transponder pill (transponder key) is missing
- Transponder pill (transponder key) faulty

Affected terminals

-

Diagnosis/troubleshooting

Work instruction		Display OK	If not OK
1	Check transponder for presence in the hand-held transmitter	⇒ Step 2	
2	Replace hand-held transmitter	→ End	

Fault code 42

Wrong key or wrong transponder pill

Diagnostic conditions

- Ignition on

Possible cause of fault

- Wrong transponder – not adapted to the vehicle.
- Short circuit to ground/voltage or open circuit in the wiring between the signal converter and alarm system control module

Affected terminals

Plug A, terminals 3 and 4

Diagnosis/troubleshooting

Work instruction			Display OK	If not OK
1	Check transponder	♦ Check whether the transponder is present in the hand-held transmitter and undamaged	⇒ Step 2	Replace hand-held transmitter → End
2	Check teaching functions	♦ Connect PST 2, switch on ignition and select the alarm system control module ♦ In menu item "Learning functions" check whether the transponder has been adapted to the vehicle	⇒ Step 3	Re-teach the transponder in menu item "Transponder key"
3	Check control lead between the alarm system control module and the signal converter for short circuit to ground	♦ Switch off ignition ♦ Pull plug A off the alarm system control module ♦ Pull plug off the signal converter ♦ Measure resistance between plug A on control module pin 4 and ground	∞ Ω ⇒ Step 4	Repair wiring harness → End
4	Check control lead between the alarm system control module and the signal converter for short circuit to B+	♦ Switch on ignition ♦ Measure voltage between plug A on alarm system control module pin 4 and ground	0 V ⇒ Step 5	Repair wiring harness → End

Work instruction			Display OK	If not OK
5	Check control lead between the alarm system control module and the signal converter for open circuit	♦ Switch off ignition ♦ Measure resistance between plug A on alarm system control module pin 4 and plug on signal converter pin 6	< 5 Ω ⇒ Step 6	Repair wiring harness → End
6	Check data lead between the alarm system control module and the signal converter for short circuit to ground	♦ Switch off ignition ♦ Pull plug A off the alarm system control module ♦ Pull plug off the signal converter ♦ Measure resistance between plug A on control module pin 3 and ground	∞ Ω ⇒ Step 7	Repair wiring harness → End
7	Check data lead between the alarm system control module and the signal converter for short circuit to B+	♦ Switch on ignition ♦ Measure voltage between plug A on alarm system control module pin 3 and ground	0 V ⇒ Step 8	Repair wiring harness → End
8	Check data lead between the alarm system control module and the signal converter for open circuit	♦ Switch off ignition ♦ Measure resistance between plug A on alarm system control module pin 3 and plug on signal converter pin 8	< 5 Ω ⇒ Step 9	Repair wiring harness → End
9	♦ Replace signal converter		→ End	

Fault code 43

Passenger-side release stuck

Diagnostic conditions

- Vehicle with version "safe position"
- Central locking changed from "safe position" to "unlocked position" by control

Possible cause of fault

- "Save" servomotor cannot be controlled
- "Save" contact (micro switch) not connected to ground after release
- Alarm system control module incorrectly coded (country coding)

Affected terminals

Plug A, terminals 28 and 29

Plug B, terminal 3

Diagnosis/troubleshooting

Work instruction			Display OK	If not OK
1	Check country coding	♦ In menu item "Country coding", check whether the control module has been correctly coded	⇒ Step 2	Re-code control module →End
2	Check wire from the alarm system control module to the "safe" contact for short circuit to ground.	♦ Switch off ignition ♦ Pull plugs A and B off the alarm system control module ♦ Pull plug off the door lock on the passenger's side ♦ Measure resistance between plug A on alarm system control module pin 28 and ground	∞ Ω ⇒Step 3	Repair wiring harness → End
3	Check wire from the alarm system control module to the "safe" contact for short circuit to B+	♦ Switch on ignition ♦ Measure voltage between plug A on alarm system control module pin 28 and ground	0 V ⇒Step 4	Repair wiring harness → End

Work instruction			Display OK	If not OK
4	Check wire from the alarm system control module to the "safe" contact for open circuit	♦ Switch off ignition ♦ Measure resistance between plug A on alarm system control module pin 28 and pin 7 on plug of door lock on passenger's side	< 5 Ω ⇒ Step 4	Repair wiring harness → End
5	Check the wire from the alarm system control module to the central locking switch for short circuit to ground	♦ Pull plug off central locking switch ♦ Measure resistance between plug A on alarm system control module pin 29 and ground	∞ Ω ⇒Step 6	Repair wiring harness → End
6	Check the wire from the alarm system control module to the central locking switch for short circuit to B+	♦ Switch on ignition ♦ Measure voltage between plug A on alarm system control module pin 29 and ground	0 V ⇒ Step 7	Repair wiring harness → End
7	Check the wire from the alarm system control module to the central locking switch for open circuit	♦ Switch off ignition ♦ Measure resistance between plug A on control module pin 29 and plug on central locking switch pin 1	< 5 Ω ⇒ Step 8	Repair wiring harness → End
8	Check wire from the alarm system control module to the central locking motor for short circuit to ground.	♦ Pull plug off the passenger's door lock ♦ Measure resistance between plug B on alarm system control module pin 3 and ground	∞ Ω ⇒ Step 9	Repair wiring harness → End
9	Check wire from the alarm system control module to the central locking motor for short circuit to B+	♦ Switch on ignition ♦ Measure voltage between plug B on alarm system control module pin 3 and ground	0 V ⇒ Step 10	Repair wiring harness → End
10	Check wire from the alarm system control module to the central locking motor for open circuit	♦ Switch off ignition ♦ Measure resistance between plug B on alarm system control module pin 3 and pin 1 on plug of door lock on passenger's side	< 5 Ω ⇒ Step 11	Repair wiring harness → End
11	♦ Replace passenger's door lock		→ End	

Fault code 44

Driver-side release stuck

Diagnostic conditions

- Vehicle with version "safe position"
- Central locking changed from "safe position" to "unlocked position" by control

Possible cause of fault

- Alarm system control module incorrectly coded (country coding)
- "Save" servomotor cannot be controlled
- "Save" contact (micro switch) not connected to ground after release

Affected terminals

Plug A, terminals 5 and 29

Plug B, terminal 3

Diagnosis/troubleshooting

Work instruction			Display OK	If not OK
1	Check country coding	♦ In menu item "Country coding", check whether the control module has been correctly coded	⇒ Step 2	Re-code control module →End
2	Check wire from the alarm system control module to the "safe" contact for short circuit to ground.	♦ Switch off ignition ♦ Pull plugs A and B off the alarm system control module ♦ Pull plug off the door lock on the driver's side ♦ Measure resistance between plug A on alarm system control module pin 5 and ground	∞ Ω ⇒ Step 3	Repair wiring harness → End
3	Check wire from the alarm system control module to the "safe" contact for short circuit to B+	♦ Switch on ignition ♦ Measure voltage between plug A on alarm system control module pin 5 and ground	0 V ⇒ Step 4	Repair wiring harness → End

Work instruction			Display OK	If not OK
4	Check wire from the alarm system control module to the "safe" contact for open circuit	♦ Switch off ignition ♦ Measure resistance between plug A on alarm system control module pin 5 and pin 7 on plug of door lock on driver's side	< 5 Ω ⇒ Step 4	Repair wiring harness → End
5	Check the wire from the alarm system control module to the central locking switch for short circuit to ground	♦ Pull plug off central locking switch ♦ Measure resistance between plug A on alarm system control module pin 29 and ground	∞ Ω ⇒ Step 6	Repair wiring harness → End
6	Check the wire from the alarm system control module to the central locking switch for short circuit to B+	♦ Switch on ignition ♦ Measure voltage between plug A on alarm system control module pin 29 and ground	0 V ⇒ Step 7	Repair wiring harness → End
7	Check the wire from the alarm system control module to the central locking switch for open circuit	♦ Switch off ignition ♦ Measure resistance between plug A on control module pin 29 and plug on central locking switch pin 1	< 5 Ω ⇒ Step 8	Repair wiring harness → End
8	Check wire from the alarm system control module to the central locking motor for short circuit to ground.	♦ Pull plug off the driver's door lock ♦ Measure resistance between plug B on alarm system control module pin 3 and ground	∞ Ω ⇒ Step 9	Repair wiring harness → End
9	Check wire from the alarm system control module to the central locking motor for short circuit to B+	♦ Switch on ignition ♦ Measure voltage between plug B on alarm system control module pin 3 and ground	0 V ⇒ Step 10	Repair wiring harness → End
10	Check wire from the alarm system control module to the central locking motor for open circuit	♦ Switch off ignition ♦ Measure resistance between plug B on alarm system control module pin 3 and pin 1 on plug of door lock on driver's side	< 5 Ω ⇒ Step 11	Repair wiring harness → End
11	♦ Replace driver's door lock		→ End	

Fault code 45

Servo motor, central locking system, short circuit to B+

Diagnostic conditions

- Ignition on

Possible cause of fault

- Short circuit to voltage in the wiring between the control module and both door locks
- Door lock faulty

Affected terminals

Plug B, terminals 3 and 9

Diagnosis/troubleshooting

Work instruction			Display OK	If not OK
1	Check wiring from the alarm system control module to the door locks for short circuit to B+	♦ Pull plug off the two door locks ♦ Pull plugs A and B off the alarm system control module ♦ Switch on ignition ♦ Measure voltage between plug B on alarm system control module pin 3 and ground ♦ Measure voltage between plug B on alarm system control module pin 9 and ground	0 V ⇒ Step 2	Repair wiring harness → End
2	Check servomotors for left door lock	♦ Switch off ignition ♦ Reconnect plug to left door lock ♦ Disconnect plug connection X11 ♦ Measure resistance on plug connection X 11 (sleeve side) between pins 11 and 17 ♦ On vehicles with "safe position": Measure resistance on plug connection X 11 (sleeve side) between pins 11 and 24	5 - 7 Ω at 20 °C ⇒ Step 3	Replace left door lock → End

Work instruction			Display OK	If not OK
3	Check servomotors for right door lock	♦ Reconnect plug to right door lock ♦ Disconnect plug connection X12 ♦ Measure resistance on plug connection X 12 (sleeve side) between pins 11 and 17 ♦ On vehicles with "safe position": Measure resistance on plug connection X 12 (sleeve side) between pins 11 and 24	5 - 7 Ω at 20 °C ⇒ Step 4	Replace right door lock → End
4	♦ Replace alarm system control module		→ End	

Fault code 46

Central locking synchronisation

Diagnostic conditions

- Central locking system controlled in "safe" or "locked" position

Possible cause of fault

- Short circuit to ground/open circuit between alarm system control module and door locks
- Door lock faulty

Affected terminals

Plug A, terminals 5, 19, 28, 30, 32

Plug B, terminal 9

Note!

During troubleshooting, the micro switches of the door locks are tested in Step 1. The test is to be used only for vehicles with "safe position". USA vehicles do not have a "safe" position; "Driver's door secured" and "Passenger's door secured" are therefore displayed during the "Input signals" test.

Diagnosis/troubleshooting

Work instruction			Display OK	If not OK
1	Check micro switches of both door locks	♦ Connect PST 2 and switch on ignition. ♦ Close doors ♦ Do not lock or secure the vehicle ♦ Select the following switch positions in the "Input signals" menu ♦ Driver's side secured ♦ Passenger's side secured ♦ Driver's side locked ♦ Passenger's side locked	Driver's side not secured (not USA) Passenger's side not secured (not USA) Driver's side not locked Passenger's side not locked ⇒ Step 4	⇒ Step 2
2	Check wiring from control module to door lock for short circuit to ground	♦ Pull plugs A and B off the control module ♦ Pull plug off the door lock with the incorrect switch positions from step 1 ♦ Measure resistance between plug A on control module pin 5 and ground (if on driver's side) or pin 28 on the control module and ground (if on passenger's side)	∞ Ω ⇒ Step 3	Repair wiring harness → End
3	Check wiring from control module to door lock for open circuit	♦ Pull plug off the door lock with the incorrect switch positions from step 1 ♦ Measure resistance between plug A on control module pin 5 and plug on door lock pin 7 (if on driver's side) or pin 28 on the control module and pin 7 on the door lock (if on passenger's side)	< 5 Ω ⇒ Step 6	Repair wiring harness → End
4	Check leads from the alarm system control module to the servomotors for short circuit to ground	♦ Pull plugs off both door locks ♦ Pull plugs A and B off the alarm system control module ♦ Measure resistance between plug B on control module pin 9 and ground ♦ Measure resistance between plug A on control module pin 19 and ground	∞ Ω ⇒ Step 5	Repair wiring harness → End

Work instruction			**Display OK**	**If not OK**
5	Check leads from the alarm system control module to the servomotors for open circuit	♦ Pull plugs off both door locks ♦ Pull plugs A and B off the alarm system control module ♦ Measure resistance between plug B on control module pin 9 and pin 2 on plugs of the right and left door locks ♦ Measure resistance between plug A on control module pin 19 and pin 9 on plugs of the right and left door locks	< 5 Ω ⇒ Step 7	Repair wiring harness → End
6	♦ Replace right or left door lock		→ End	
7	♦ Replace control module		→ End	

Fault code 47

Central locking synchronisation

Diagnostic conditions

- Control of central locking in "unlocked position"

Possible cause of fault

- Short circuit to ground/open circuit between alarm system control module and door locks
- Door lock faulty

Affected terminals

Plug A, terminals 5, 19, 28, 30, 32

Plug B, terminal 9

Note!

During troubleshooting, the micro switches of the door locks are tested in Step 1. The test is to be used only for vehicles with "safe position". USA vehicles do not have a "safe" position; "Driver's door secured" and "Passenger's door secured" are therefore displayed during the "Input signals" test.

Diagnosis/troubleshooting

Work instruction			Display OK	If not OK
1	Check micro switches of both door locks	♦ Connect PST 2 and switch on ignition. ♦ Close doors ♦ Do not lock or secure the vehicle ♦ Select the following switch positions in the "Input signals" menu ♦ Driver's side secured ♦ Passenger's side secured ♦ Driver's side locked ♦ Passenger's side locked	Driver's side not secured (not USA) Passenger's side not secured (not USA) Driver's side not locked Passenger's side not locked ⇒ Step 4	⇒ Step 2
2	Check wiring from control module to door lock for short circuit to ground	♦ Pull plugs A and B off the control module ♦ Pull plug off the door lock with the incorrect switch positions from step 1 ♦ Measure resistance between plug A on control module pin 5 and ground (if on driver's side) or pin 28 on the control module and ground (if on passenger's side)	∞ Ω ⇒ Step 3	Repair wiring harness → End
3	Check wiring from control module to door lock for open circuit	♦ Pull plug off the door lock with the incorrect switch positions from step 1 ♦ Measure resistance between plug A on control module pin 5 and plug on door lock pin 7 (if on driver's side) or pin 28 on the control module and pin 7 on the door lock (if on passenger's side)	< 5 Ω ⇒ Step 6	Repair wiring harness → End
4	Check leads from the alarm system control module to the servomotors for short circuit to ground	♦ Pull plugs off both door locks ♦ Pull plugs A and B off the alarm system control module ♦ Measure resistance between plug B on control module pin 9 and ground ♦ Measure resistance between plug A on control module pin 19 and ground	∞ Ω ⇒ Step 5	Repair wiring harness → End

Work instruction			**Display OK**	**If not OK**
5	Check leads from the alarm system control module to the servomotors for open circuit	♦ Pull plug off both door locks ♦ Pull plugs A and B off the alarm system control module ♦ Measure resistance between plug B on control module pin 9 and pin 2 on plugs of the right and left door locks ♦ Measure resistance between plug A on control module pin 19 and pin 9 on plugs of the right and left door locks	< 5 Ω ⇒ Step 7	Repair wiring harness → End
6	♦ Replace right or left door lock		→ End	
7	♦ Replace control module		→ End	

Fault code 48

Airbag signal recognized

Diagnostic conditions

- After airbag triggering, the airbag control module sends a signal to the alarm system control module.
- This is a triggering log.

Possible cause of fault

- Airbag triggered
- Open circuit in ground lead from ground point 7 to control module

Affected terminals

Plug B, terminal 1

Note!

Repair vehicle and erase the fault memory after airbag has triggered

Diagnosis/troubleshooting

Work instruction			Display OK	If not OK
1	If the airbag has not been triggered, check ground lead from ground point 7 to the alarm system control module for open circuit	♦ Switch off ignition ♦ Pull plugs A and B off the alarm system control module ♦ Measure the resistance between plug B pin 1 and ground	< 5 Ω → End	Repair wiring harness → End

Fault code 49

K lead

Diagnostic conditions

- Ignition on

Possible cause of fault

- ♦ K lead connected to ground for at least 2 seconds after ignition is switched on

Affected terminals

Plug A, terminal 2

Diagnosis/troubleshooting

Work instruction			Display OK	If not OK
1	Check the wire from data link connector to alarm system control module for short circuit to ground	♦ Pull plug A off the alarm system control module ♦ Measure resistance between plug A on alarm system control module pin 2 and ground	∞ Ω ⇒ Step 2	Repair wiring harness → End
2	Check the wire from data link connector to alarm system control module for short circuit to B+	♦ Switch on ignition ♦ Measure voltage between plug A on control module pin 2 and ground	0 V ⇒ Step 3	Repair wiring harness → End
3	Check the wire from the data link connector to the alarm system control module for open circuit	♦ Switch off ignition ♦ Measure resistance between plug A on control module pin 2 and pin 7 on the data link connector	< 5 Ω ⇒ Step 4	Repair wiring harness → End
4	♦ Replace control module		→ End	

Fault code 50

Radio transmitter code

Diagnostic conditions

- Central locking system actuated via hand-held transmitter

Possible cause of fault

- ♦ At least one of the four radio code positions recognised as unknown

Affected terminals

-

Diagnosis/troubleshooting

Work instruction			Display OK	If not OK
1	Check teaching functions	♦ Check whether the hand-held transmitter have been correctly taught in menu item "Learning functions". (Are all radio codes displayed?)	The radio codes of all taught hand-held transmitters are displayed ⇒ Step 3	⇒ Step 2
2	Re-teach hand-held transmitters	♦ Re-teach hand-held transmitters	Fault code 50 no longer appears and the hand-held transmitter functions are OK → End	⇒ Step 3
3	♦ Replace control module		→ End	

Fault code 51

Alarm siren

Diagnostic conditions

- Internal control module fault

Possible cause of fault

- Control module faulty

Affected terminals

-

Diagnosis/troubleshooting

Work instruction			Display OK	If not OK
1	Read out fault memory again	♦ Erase fault memory ♦ Switch off ignition ♦ Switch on ignition ♦ Read out fault memory	Fault code 51 no longer appears → End	⇒ Step 2
2	♦ Replace control module		→ End	

Fault code 52

Door lock barrel "open", activated longer than 60 s

Diagnostic conditions

- 60 s waiting time

Possible cause of fault

- Incorrect operation, door lock actutated in direction "open" for longer than 60 s
- Short circuit to voltage/ground or open circuit in the wiring between the alarm system control module and both door locks
- Door lock faulty

Affected terminals

Plug A, terminal 15

Diagnosis/troubleshooting

Work instruction			Display OK	If not OK
1	Check wire between alarm system control module and door lock (driver/passenger) for short circuit to ground	♦ Pull plug A off the control module ♦ Pull plug off both door locks ♦ Measure the resistance between plug A pin 15 and ground	∞ Ω ⇒ Step 2	Repair wiring harness → End
2	Check wire between alarm system control module and door lock (driver/passenger) for short circuit to B+	♦ Switch on ignition ♦ Measure voltage between plug A on control module pin 15 and ground	0 V ⇒ Step 3	Repair wiring harness → End
3	Check wire between alarm system control module and door lock (driver/passenger) for open circuit	♦ Switch off ignition ♦ Measure resistance between plug A pin 15 and plug on driver's door lock pin 6 ♦ Measure resistance between plug A pin 35 and plug on passenger's door lock pin 6	< 5 Ω ⇒ Step 4	Repair wiring harness → End
4	Determine which door lock is faulty	♦ In the menu item "Input signals", select "Door lock barrel" ♦ Connect plug on passenger's door lock	Door lock barrel not actuated ⇒ Step 5	⇒ Step 6

Work instruction			Display OK	If not OK
5	Determine which door lock is faulty	♦ In the menu item "Input signals", select "Door lock barrel" ♦ Connect plug on driver's door lock	Door lock barrel not actuated	⇒ Step 7
6	♦ Replace door lock on passenger's side		→ End	
7	♦ Replace door lock on driver's side		→ End	

Fault code 53

EPROM fault (checksum)

Diagnostic conditions

- Central locking system actuated in the direction "safe" or "locked" and alarm system activated

Possible cause of fault

- Control module faulty

Affected terminals

-

Diagnosis/troubleshooting

Work instruction		Display OK	If not OK
1	♦ Replace control module	→ End	

Fault code 54

Tilt sensor not in normal position

Diagnostic conditions

- Alarm system activated

Possible cause of fault

- Additional alarm system (alarm siren with tilt sensor) is not installed correctly
- Additional alarm system (tilt sensor) is faulty

Affected terminals

-

Diagnosis/troubleshooting

Work instruction		Display OK	If not OK
1	Check installation position and position of the tilt sensor.	⇒ Step 2	Correct installation position of the tilt sensor
2	♦ Replace tilt sensor	→ End	

Fault code 58

No current in tank servomotor despite relay actuation

Diagnostic conditions

- Central locking system actuation in the direction "safe" or "locked"

Possible cause of fault

- Short circuit to ground/open circuit in the wiring between the switching element for the filler flap and the alarm system control module
- Open circuit in wire between ground point 7 and alarm system control module
- Switching element for filler flap faulty
- Control module faulty

Affected terminals

Plug B, terminals 1, 5 and 10

Diagnosis/troubleshooting

Work instruction			Display OK	If not OK
1	Check wire between ground point 7 and alarm system control module for open circuit	♦ Switch off ignition ♦ Pull plug B off the alarm system control module ♦ Measure the resistance between plug B pin 1 and ground	< 5 Ω ⇒ Step 2	Repair wiring harness → End
2	Check the wiring from the switching element for the filler flap to the alarm system control module for short circuit to ground	♦ Pull plug off switching element for filler flap ♦ Measure resistance between plug B on alarm system control module pin 5 and ground ♦ Measure resistance between plug B on alarm system control module pin 10 and ground	∞ Ω ⇒ Step 3	Repair wiring harness → End

Work instruction			Display OK	If not OK
2	Check the wiring from the switching element for the filler flap to the alarm system control module for open circuit	♦ Measure resistance between plug B on alarm system control module pin 5 and pin 2 on plug of switching element for filler flap ♦ Measure resistance between plug B on alarm system control module pin 10 and pin 1 on plug of switching element for filler flap	< 5 Ω ⇒ Step 3	Repair wiring harness → End
3	Check output signal of the alarm system control module	♦ Select "Filler flap" in menu item "Drive links" ♦ Perform a drive-link test and simultaneously measure the voltage on the plug of the switching element for filler flap, pins 1 and 2	A short voltage pulse can be measured with the digital multimeter ⇒ Step 4	⇒ Step 5
4	♦ Replace switching element for filler flap		→ End	
5	♦ Replace control module		→ End	

Fault code 59

Central locking limit position - safe not reached

Diagnostic conditions

- Control of central locking system in the direction of "safe"

Possible cause of fault

- Short circuit to ground/open circuit in the wiring between the alarm system control module and both door locks
- Door lock faulty
- Control module faulty

Affected terminals

Plug A, terminals 5,19 and 28

Plug B, terminals 1, 8 and 9

Diagnosis/troubleshooting

Work instruction			Display OK	If not OK
1	Check fuse C3	♦ Pull off and check fuse C3	Fuse C3 OK ⇒ Step 2	Replace fuse C3 → End
2	Check the wire from ground point 7 to the alarm system control module for open circuit	♦ Switch off ignition ♦ Pull plugs A and B off the alarm system control module ♦ Measure resistance between plug B on alarm system control module pin 1 and ground	< 5 Ω ⇒ Step 3	Repair wiring harness → End
3	Check leads from the alarm system control module to the servomotors for short circuit to ground	♦ Pull plugs off both door locks ♦ Measure resistance between plug B on alarm system control module pin 9 and ground	∞ Ω ⇒ Step 4	Repair wiring harness → End
4	Check leads from the alarm system control module to the servomotors for open circuit	♦ Measure resistance between plug B on alarm system control module pin 9 and pin 2 on plug of door lock (driver's side/passenger's side)	< 5 Ω ⇒ Step 5	Repair wiring harness → End
5	Check leads from the alarm system control module to the servomotors for short circuit to ground	♦ Measure resistance between plug A on alarm system control module pin 19 and ground	∞ Ω ⇒ Step 6	Repair wiring harness → End

Work instruction			Display OK	If not OK
6	Check leads from the alarm system control module to the servomotors for open circuit	♦ Measure resistance between plug A on alarm system control module pin 19 and pin 9 on plug of door lock (driver's side/passenger's side)	< 5 Ω ⇒ Step 7	Repair wiring harness → End
7	Check leads from the alarm system control module to the door locks for short circuit to ground	♦ Measure resistance between plug A on alarm system control module pin 5 and ground ♦ Measure resistance between plug A on alarm system control module pin 28 and ground	∞ Ω ⇒ Step 8	Repair wiring harness → End
8	Check leads from the alarm system control module to the door locks for open circuit	♦ Measure resistance between plug A on alarm system control module pin 5 and pin 7 on plug of door lock on driver's side ♦ Measure resistance between plug A on alarm system control module pin 28 and pin 7 on plug of door lock on passenger's side	< 5 Ω ⇒ Step 9	Repair wiring harness → End
9	Check output signals of the control module	♦ Connect special tools 9616 and 9617 to the alarm system control module ♦ Reconnect plugs to both door locks ♦ Switch on ignition ♦ Select "Secure doors" in menu item "Drive links" ♦ Carry out a drive link test and simultaneously measure the voltage on special tool 9616, pin 19 and ground	A voltage pulse can be measured with the digital multimeter ⇒ Step 10	⇒ Step 11
10	♦ Replace door lock		→ End	
11	♦ Replace alarm system control module		→ End	

Fault code 60

Central locking limit position - locked not reached

Diagnostic conditions

- Control of central locking system in the direction of "locked"

Possible cause of fault

- Switch for central locking faulty
- Short circuit to ground/open circuit in the wiring between the alarm system control module, switch for central locking or door locks
- Driver's/passenger's door lock faulty
- Control module faulty

Affected terminals

Plug A, terminals 5, 28, 29, 30, 32

Plug B, terminals 8 and 9

Note!

During troubleshooting, the micro switches of the door locks are tested in Step 4. The test is to be used only for vehicles with "safe position". USA vehicles do not have a "safe" position; "Driver's door secured" and "Passenger's door secured" are therefore displayed during the "Input signals" test.

Diagnosis/troubleshooting

Work instruction			Display OK	If not OK
1	Check switch for central locking	♦ In the menu item "Input signals", select "Central locking system button" ♦ Actuate central locking system switch and check the statuses on the screen	⇒ Step 2	⇒ Step 5
2	Check leads between the alarm system control module and the door locks for short circuit to ground	♦ Pull plugs A and B off the alarm system control module ♦ Pull plug off both door locks ♦ Measure resistance between plug A on alarm system control module pin 5 and ground ♦ Measure resistance between plug A on alarm system control module pin 28 and ground ♦ Measure resistance between plug A on alarm system control module pin 30 and ground ♦ Measure resistance between plug A on alarm system control module pin 32 and ground ♦ Measure resistance between plug B on alarm system control module pin 8 and ground ♦ Measure resistance between plug B on alarm system control module pin 9 and ground	∞ Ω ⇒ Step 3	Repair wiring harness → End

Work instruction			**Display OK**	**If not OK**
3	Check leads between the alarm system control module and the door locks for open circuit	♦ Measure resistance between plug A on alarm system control module pin 5 and pin 7 on plug of door lock on driver's side ♦ Measure resistance between plug A on alarm system control module pin 28 and pin 7 on plug of door lock on passenger's side ♦ Measure resistance between plug A on alarm system control module pin 30 and pin 3 on plug of door lock on driver's side ♦ Measure resistance between plug A on alarm system control module pin 32 and pin 3 on plug of door lock on passenger's side ♦ Measure resistance between plug B on alarm system control module pin 9 and pin 2 on plug of the driver's side and passenger's side door locks ♦ Measure resistance between plug B on alarm system control module pin 9 and ground	< 5 Ω ⇒ Step 4	Repair wiring harness → End
4	Check micro switches of the two door locks (possible detection of faulty driver's/passenger's door lock)	♦ Push plugs A and B back onto the alarm system control module ♦ Reconnect plugs to both door locks ♦ Close doors ♦ Vehicle not secured and not locked ♦ Select "Driver's side locked", "Passenger's side locked" "Driver's side secured" and "Passenger's side secured" in menu item "Input signals".	Driver's side not locked Passenger's side not locked Driver's side not secured (not applicable to USA vehicles) Passenger's side not secured (not applicable to USA vehicles) ⇒ Step 12	⇒ Step 11

Work instruction			Display OK	If not OK
5	Check switch for central locking	♦ Remove switch for central locking and pull plug off the switch ♦ Measure resistance between pins 4 and 1 on the central locking switch	Central locking switch actuated in "close" direction < 5 Ω Central locking switch not actuated in "close" direction ∞ Ω ⇒ Step 6	Replace switch for central locking → End
6	Check switch for central locking	♦ Measure resistance between pins 4 and 2 on the central locking switch	Central locking switch actuated in "open" direction < 5 Ω Central locking switch not actuated in "open" direction ∞ Ω ⇒ Step 7	Replace switch for central locking → End
7	Check the wire from the central locking switch to the control module for short to ground	♦ Pull plug off switch for central locking ♦ Pull plug A off the alarm system control module ♦ Measure resistance between plug A on control module pin 29 and ground	∞ Ω ⇒ Step 8	Repair wiring harness → End
8	Check the wire from the central locking switch to the control module for open circuit	♦ Measure resistance between plug A on control module pin 29 and plug on switch for central locking pin 1	< 5 Ω ⇒ Step 9	Repair wiring harness → End
9	Check the wire from the central locking switch to the control module for open circuit	♦ Measure resistance between pins 1 and 2 of plug for central locking switch	approx. 180 Ω at 20 °C ⇒ Step 10	Repair wiring harness → End
10	Check wire from fuse C 3 to switch for central locking	♦ Switch on ignition ♦ Measure voltage between plug on the central locking system pin 4 and ground	> 11 V ⇒ Step 12	Check fuse C 3 or repair wiring harness → End
11	♦ Depending on the test result of the input signals test in step 4, replace the driver's/passenger's door lock		→ End	
12	♦ Replace alarm system control module		→ End	

Fault code 61

Central locking limit position - unlocked not reached

Diagnostic conditions

- Control of central locking system in the direction of "unlocked"

Possible cause of fault

- Wrong country coding
- Short circuit to ground/open circuit in the wiring between the alarm system control module, central locking switch or door locks
- Door lock (driver/passenger) faulty
- Control module faulty

Affected terminals

Plug A, terminals 5, 28, 29, 30, 32

Plug B, terminal 3

Note!

During troubleshooting, the micro switches of the door locks are tested in Step 4. The test is to be used only for vehicles with "safe position". USA vehicles do not have a "safe" position; "Driver's door secured" and "Passenger's door secured" are therefore displayed during the "Input signals" test.

Diagnosis/troubleshooting

Work instruction			Display OK	If not OK
1	Check coding	♦ In menu item "Country coding", check whether the alarm system control module is correctly coded for the place of use	⇒ Step 2	Recode the alarm system control module (country coding) → Ende
2	Check central locking switch	♦ In the menu item "Input signals", select "Central locking system button" ♦ Actuate central locking system switch and check the statuses on the screen	⇒ Step 3	⇒ Step 5

Work instruction			Display OK	If not OK
3	Check leads between the alarm system control module and the door locks for short circuit to ground	♦ Pull plugs A and B off the alarm system control module ♦ Pull plug off both door locks ♦ Measure resistance between plug A on alarm system control module pin 5 and ground ♦ Measure resistance between plug A on alarm system control module pin 28 and ground ♦ Measure resistance between plug A on alarm system control module pin 30 and ground ♦ Measure resistance between plug A on alarm system control module pin 32 and ground ♦ Measure resistance between plug B on alarm system control module pin 3 and ground	∞ Ω ⇒ Step 4	Repair wiring harness → End
4	Check leads between the alarm system control module and the door locks for open circuit	♦ Measure resistance between plug A on alarm system control module pin 5 and pin 7 on plug of door lock on driver's side ♦ Measure resistance between plug A on alarm system control module pin 28 and pin 7 on plug of door lock on passenger's side ♦ Measure resistance between plug A on alarm system control module pin 30 and pin 3 on plug of door lock on driver's side ♦ Measure resistance between plug A on alarm system control module pin 32 and pin 3 on plug of door lock on passenger's side ♦ Measure resistance between plug B on alarm system control module pin 3 and pin 2 on plug of the driver's side and passenger's side door locks ♦ Measure resistance between plug B on alarm system control module pin 9 and ground	< 5 Ω ⇒ Step 5	Repair wiring harness → End

Work instruction			Display OK	If not OK
5	Check micro switches of the two door locks (possible detection of faulty driver's/passenger's door lock)	♦ Push plugs A and B back onto the alarm system control module ♦ Reconnect plugs to both door locks ♦ Close doors ♦ Vehicle not secured and not locked ♦ Select "Driver's side locked", "Passenger's side locked" "Driver's side secured" and "Passenger's side secured" in menu item "Input signals".	Driver's side not locked Passenger's side not locked Driver's side not secured (not applicable to USA vehicles) Passenger's side not secured (not applicable to USA vehicles) ⇒ Step 12	⇒ Step 11
6	Check central locking switch	♦ Remove central locking switch and pull plug off the switch ♦ Measure resistance between pins 4 and 1 on the central locking switch	Central locking switch actuated in "open" direction < 5 Ω Central locking switch not actuated in "close" direction ∞ Ω ⇒ Step 6	
7	Check central locking switch	♦ Measure resistance between pins 4 and 2 on the central locking switch	Central locking switch actuated in "open" direction < 5 Ω Central locking switch not actuated in "open" direction ∞ Ω ⇒ Step 7	
8	Check the wire from the central locking switch to the control module for short circuit to ground	♦ Pull plug off central locking switch ♦ Pull plug A off the alarm system control module ♦ Measure resistance between plug A on control module pin 29 and ground	∞ Ω ⇒ Step 8	
9	Check the wire from the central locking switch to the control module for open circuit	♦ Measure resistance between plug A on control module pin 29 and plug on switch for central locking pin 1		
10	Check the wire from the central locking switch to the control module for open circuit	♦ Measure resistance between pins 1 and 2 of plug for central locking switch	approx. 180 Ω at 20 °C ⇒ Step 10	

Work instruction			Display OK	If not OK
11	Check wire from fuse C 3 to central locking switch	♦ Switch on ignition ♦ Measure voltage between plug on the central locking switch pin 4 and ground	> 11 V ⇒ Step 12	Check fuse C 3 or repair wiring harness → End
12	♦ Depending on the test result of the input signals test in step 4, replace the driver's/passenger's door lock		→ End	
13	♦ Replace alarm system control module		→ End	